ACTIVE FILTERS

PREPARED BY RINJU RAVINDRAN, ADHOC ASST. PROFESSOR-
ECE, GCEK

- An electric filter is often a freq selective ckt that passes a specified band of freqs & blocks or attenuates s/gs of freqs outside this band.

Filters :

- Analog / digital
- Passive / active
- Audio (AF)/ radio (RF) freq

PREPARED BY BINJU RAVINDRAN, ADHOC ASST. PROFESSOR-ECE, GCEK

1. Analog or digital filters:

Analog filters are designed to process analog signals, while digital filters process analog signals using digital technique.

2. Active or Passive:

Depending on the type of elements used in their construction, filter may be classified as passive or Active elements used in passive filters are R, L, C. Elements used in active filters are transistor, or op-amp in addition to R and C.

3. Audio (AF)/ radio (RF) freq :

- The type of elements used dictates the operating freq range of the filter.
- Eg: RC filters are used for AF or low freq opr
- LC or crystal filters are employed at RF or HF. Especially bcoz of their high Q values, crystals provide more stable opr at HFs.

PREPARED BY RINU RAVINDRAN, ADHOC ASST. PROFESSOR-
ECE, GCEK

Active filters offer the following advantages over passive filters:

PROFESSOR-

1. Gain and Frequency adjustment flexibility: Since the op-amp is capable of providing gain, the i/p signal is not attenuated as it is in a passive filter. [Active filter is easier to tune or adjust].
2. No loading problem: Because of the high input resistance and low o/p resistance of the op-amp, the active filter does not cause loading of the source or load.

3. Cost: Active filters are more economical than passive filter. This is because of the variety of cheaper op-amps and the absence of inductors.

PREPARED BY RINJU RAVINDRAN, ADHOC ASST. PROFESSOR-
ECE, GCEK

The most commonly used filters are these:

1. Low pass Filters
2. High pass Filters
3. Band pass filters
4. Band –reject filters
5. All pass filters.

PREPARED BY RINJU RAVINDRAN, ADHOC ASST. PROFESSOR-ECE, GCEK

Frequency response of the active filters:

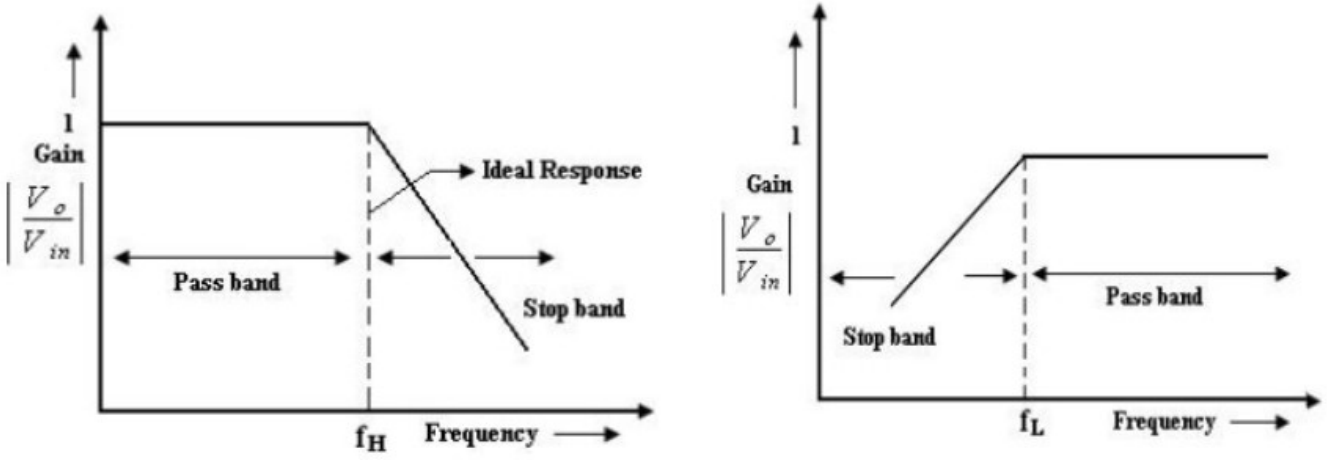

Fig 2.52 Frequency response of Low Pass filter and High pass Filter

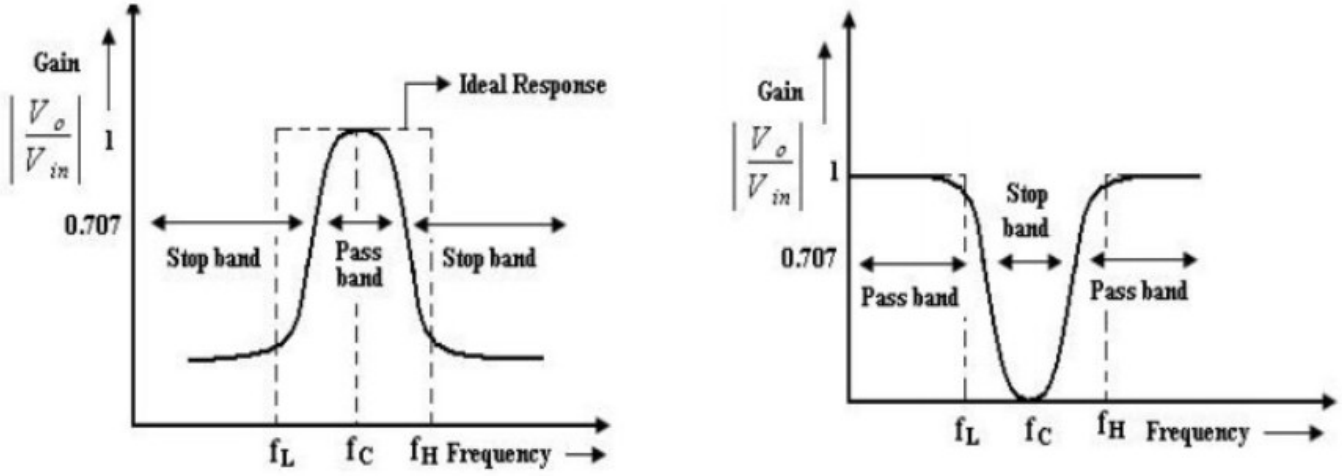

Fig 2.53 Frequency response of Band Pass filter and Band reject Filter

PROFESSOR-
PREPAR
ECE, G

Each of these uses op amp as active element and R and C as passive elements.

PREPARED BY RINJU RAVINDRAN, AD HOC ASST. PROFESSOR-ECE, GCEK

1. It has a constant gain from 0 Hz to a high cutoff frequency f_H.
2. At f_H the gain is down by 3db.
3. The frequency between 0 Hz and f_H ---- pass band frequencies where as the range of frequencies those beyond f_H, that are attenuated includes the stop band frequencies.
4. Butterworth, Chebyshev and Cauer filter are some of the most commonly used practical filters.
5. The key characteristics of the Butter worth filter are that it has a flat pass band as well as stop band. For this reason, it is sometimes called **flat- flat filters**.
6. Chebyshev filter -> has a ripple pass band & flat stop band.
7. Cauer Filter -> has a ripple pass band & ripple stop band.

High pass filter:

- High pass filter with a stop band $0 < f < f_L$
- pass band $f > f_L$
- f_L low cut off frequency
- f operating frequency.

Band pass filter:

- It has a pass band between 2 cut off frequencies f_H and f_L where $f_H > f_L$ and 2 stop bands: $0<f< f_L$ and $f > f_H$ between the band pass filter (equal to $f_H - f_L$).

Band reject filter (Band stop or Band elimination) :

- It performs exactly opposite to the band pass.
- It has a band stop between 2 cut-off frequency f_L and f_H and 2 pass bands: $0 < f < f_L$ and $f > f_H$
- f_C center frequency.

PREPARED BY RINJU RAVINDRAN, ADHOC ASST. PROFESSOR
ECE, GCEK

FIRST ORDER LOW PASS BUTTERWORTH FILTER

PREPARED BY RINJU RAVINDRAN, AD HOC ASST. PROFESSOR-ECE, GCEK

FIRST ORDER LOW PASS BUTTERWORTH FILTER

OFESSOR-

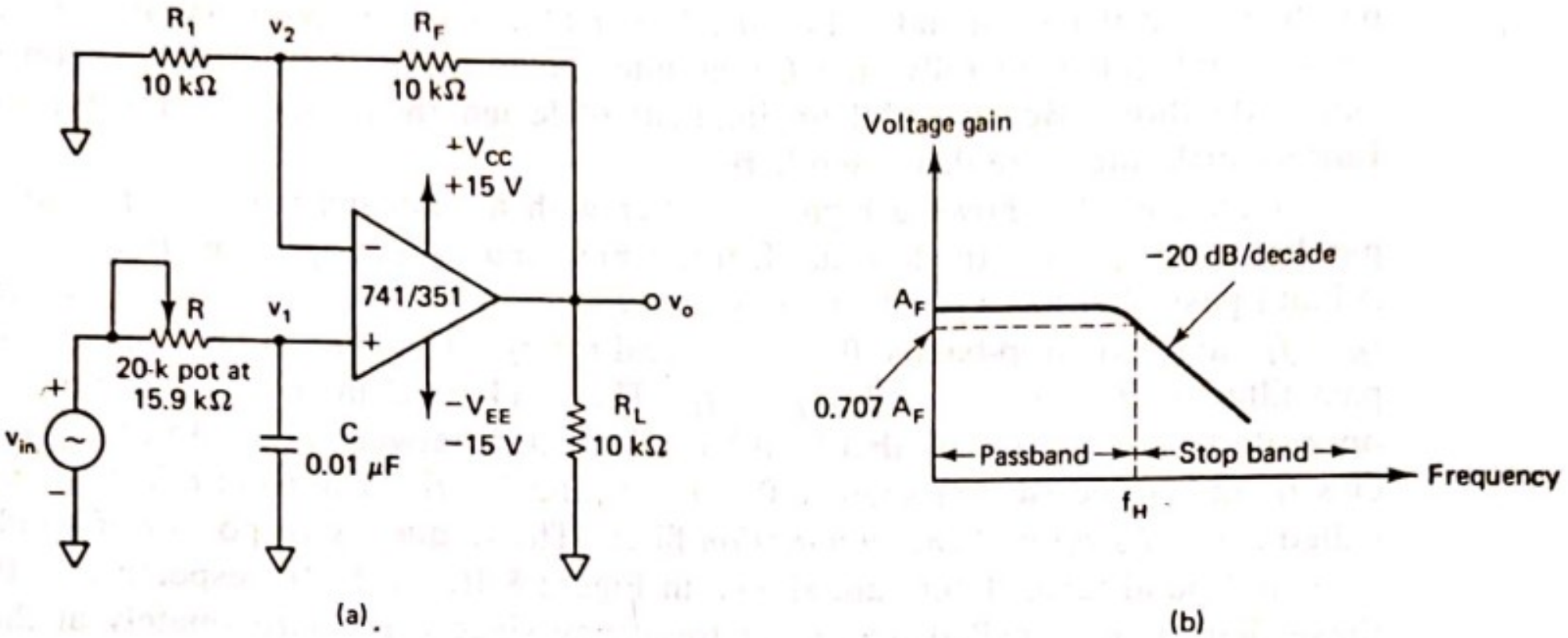

Figure 8–2 First-order low-pass Butterworth filter. (a) Circuit. (b) Frequency response.

- First order LPF that uses an RC n/w for filtering.
- op-amp is used in the non inverting configuration.
- Resistor R_1 & R_F determine the gain of the filter.
- According to the V divider rule,

V across capr $V_1 = V_{in}$

$V_1 =$

Output Voltage $v_o = (1 + R_F/R_1) V_1$

PREPARED BY KINJU RAVINDRAN, ADHOC ASST. PROFESSOR-ECE, GCEK

Overall gain $V_0/V_{in} = (1+R_f/R_1)/(1+j2\pi fRC)$

V_0/V_{in} gain of filter as a fn of freq

A_F is pass band gain of the filter

f = freq of i/p s/g

f_H = high cut off freq of the filter

PREPARED BY RINJU RAVINDRAN, ADHOC ASST. PROFESSOR-ECE, GCEK

- Transfer function

$H(s) =$

$H(j\omega) =$

PREPARED BY RINJU RAVINDRAN, ADHOC ASST. PROFESSOR-ECE, GCEK

- The gain magnitude and phase angle of the equation of the LPF can be obtained by converting eqn. into its equivalent polar form as follows.

$$| \quad | =$$

Opr of LPF can be verified from gain magnitude eqn as follows:

1. At very low frequencies, $f < f_H$

$| \quad | \; A_F$

PREPARED BY RINJU RAVINDRAN, ADHOC ASST. PROFESSOR-ECE, GCEK

- At $f = f_H$, $|\quad| = 0.707\ A_F$
- At $f > f_H$, $|\quad| < A_F$
- LPF has a constant gain A_F from 0 to f_H.
- At f_H, gain is $0.707A_F$ and after f_H it decreases at a constant rate with an increase in freq.
- When the frequency increases by tenfold (one decade), the volt gain is divided by 10.
- The gain falls by 20 dB (=20log10) each time the frequency is increased by 10.

PREPARED BY RENJU RAVINDRAN, AD HOC ASST. PROFESSOR-ECE, GCEK

- Hence the rate at which the gain rolls off f_H = 20 dB/decade or 6dB/octave (octave --- two fold increase in frequency).
- The frequency f = f_H is called the cut off frequency because the gain of the filter at this frequency is down by 3 dB (=20 log 0.707) from 0Hz.
- cut off frequency ---- break freq, -3dB freq, corner freq.

PREPARED BY RAMU RAVINDRAN, ADHOC ASST. PROFESSOR-ECE,CCEW

Steps in Filter design:

LPF can be designed by implementing following steps.

1. Choose a value of high cut off frequency f_H.
2. Select a value of C 1μf.
3. Choose the value of R using the relation

$$f_H = 1/2\pi RC$$

4. Finally select values of R1 and R_F dependent on the desired pass band gain A_F using

$$A_F = (1 + R_F/R_1)$$

Frequency scaling

- Once a filter is designed and if we need to change cut off freq from f_H to new freq f_H'.
- This procedure is called freq scaling.
- Multiply either R or C (not both) , by the ratio
- Variable cap C is not commonly used.
- So use std value of C and find R for desired cut off freq.
- This is bcoz, for non std value of res, a pot.can be used

PREPARED BY BINJU RAVINDRAN, ADHOC ASST. PROFESSOR-ECE, GCEK

NUMERICALS

1. a) Design a LPF with cut off freq of 1 KHZ with a pass band gain of 2.

   b) Also plot the freq response of LPF.

2. Using the freq scaling technique, convert 1 KHz cut off freq of LPF (of above question) to a cut off freq of 1.6 KHz.

PREPARED BY RINJU RAVINDRAN, ADHOC ASST. PROFESSOR-ECE, GCEK

SOLUTION Follow the preceding design steps.

1. $f_H = 1$ kHz.
2. Let $C = 0.01\ \mu$F.
3. Then $R = 1/(2\pi)(10^3)(10^{-8}) = 15.9$ kΩ. (Use a 20-kΩ potentiometer.)
4. Since the passband gain is 2, R_1 and R_F must be equal. Therefore, let $R_1 = R_F = 10$ kΩ. The complete circuit with component values is shown in Figure 8-2(a).

SOLUTION To change a cutoff frequency from 1 kHz to 1.6 kHz, we multiply the 15.9-kΩ resistor by

$$\frac{\text{original cutoff frequency}}{\text{new cutoff frequency}} = \frac{1\ \text{kHz}}{1.6\ \text{kHz}} = 0.625$$

ECE

$$\left|\frac{v_o}{v_{in}}\right| = \frac{A_F}{\sqrt{1 + (f/f_H)^2}}$$

where $A_F = 2$ and $f_H = 1$ kHz. The data of Table 8-1 are plotted as shown in Figure 8-3.

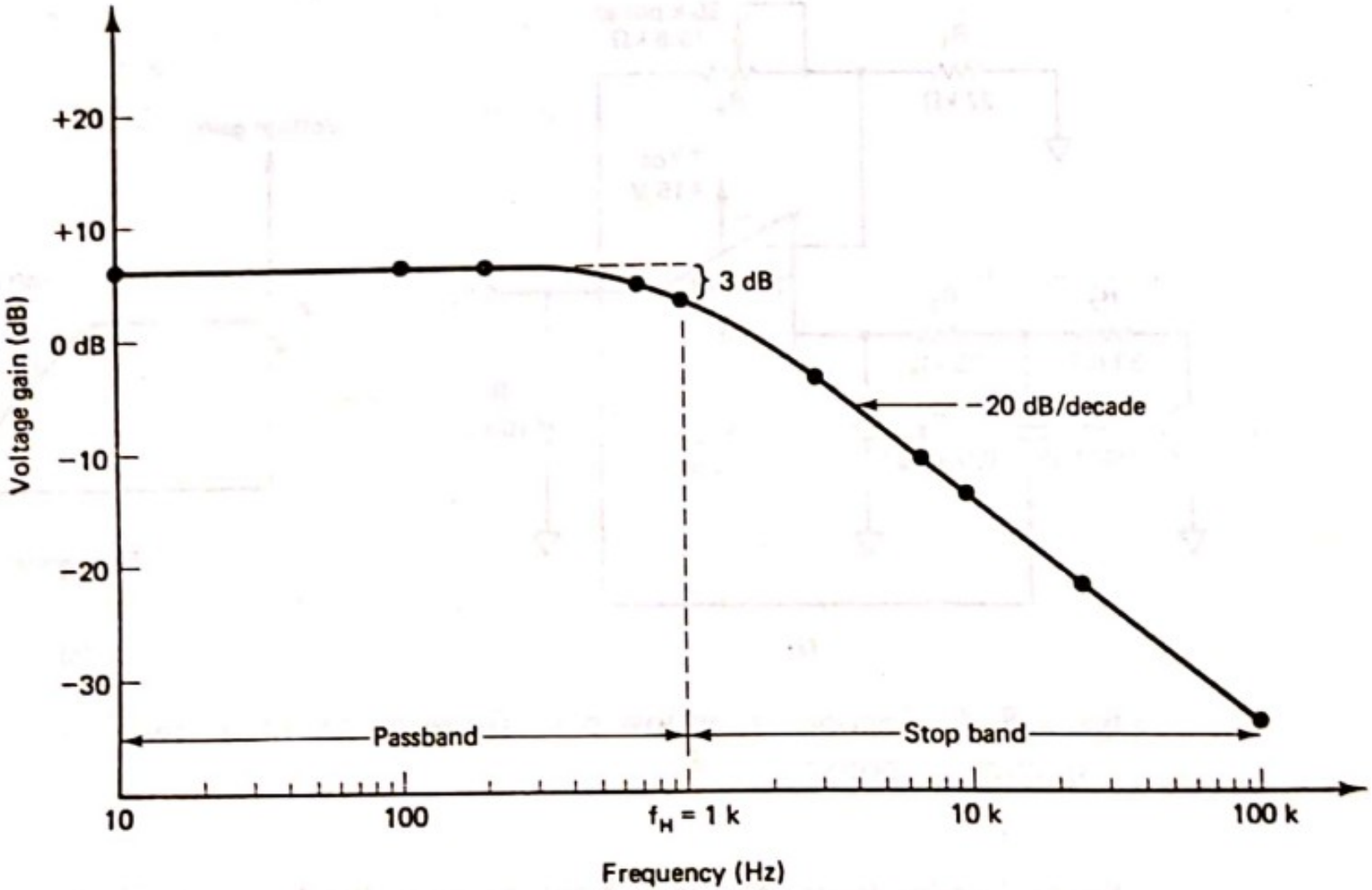

PREP ECE
ESSOR-

TABLE 8-1 FREQUENCY RESPONSE DATA FOR EXAMPLE 8-3

Input frequency, f (Hz)	Gain magnitude, $\lvert v_o/v_{in}\rvert$	Magnitude (dB) = $20 \log\lvert v_o/v_{in}\rvert$
10	2	6.02
100	1.99	5.98
200	1.96	5.85
700	1.64	4.29
1,000	1.41	3.01
3,000	0.63	−3.98
7,000	0.28	−10.97
10,000	0.20	−14.02
30,000	0.07	−23.53
100,000	0.02	−33.98

SECOND ORDER LOW PASS BUTTERWORTH FILTER

PREPARED BY RINJU RAVINDRAN, ADHOC ASST. PROFESSOR-ECE, GCEK

Second order LP Butterworth

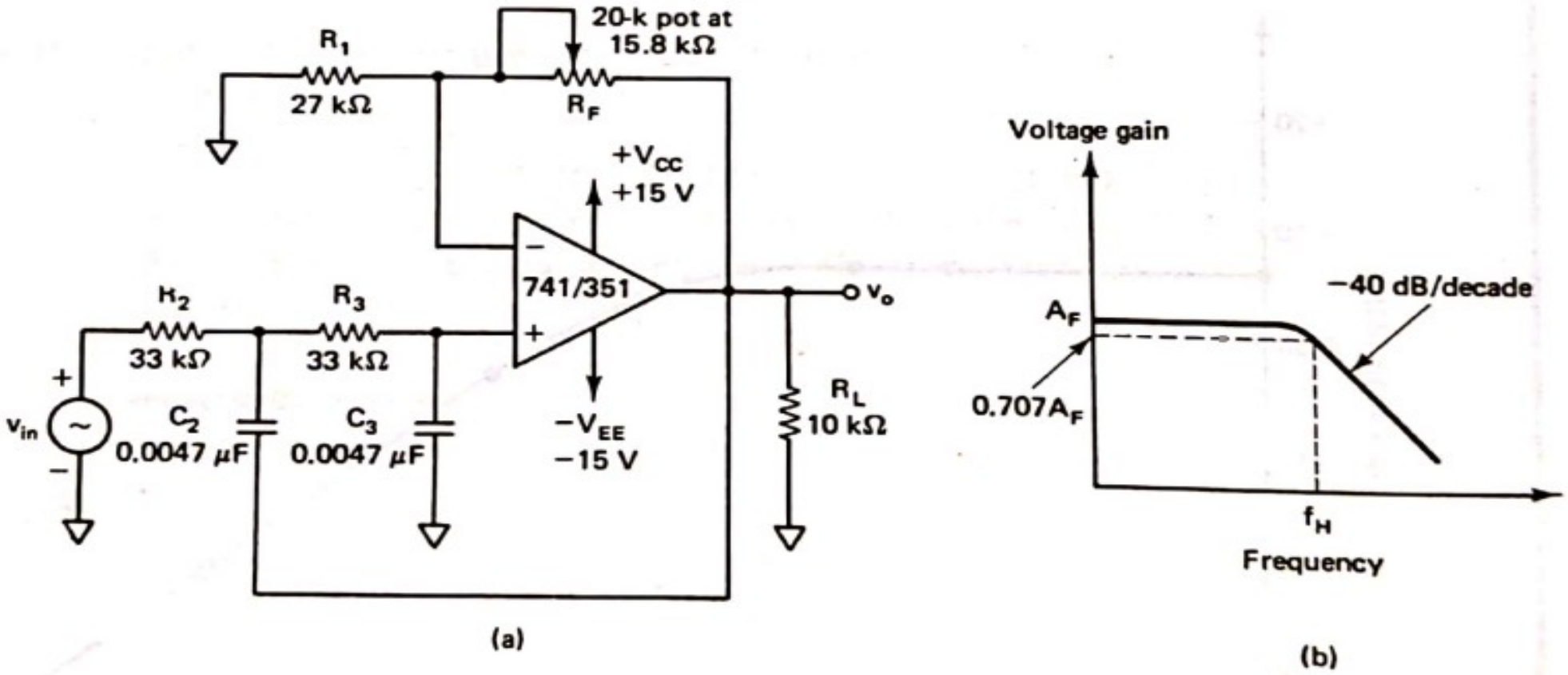

Figure 8–4 Second-order low-pass Butterworth filter. (a) Circuit. (b) Frequency response.

- A second order LPF having a gain 40dB/decade in stop band.
- A First order LPF can be converted into a II order type simply by using an additional RC network.

- The gain of the II order filter is set by R_1 and R_F, while the high cut off frequency f_H is determined by R_2, C_2, R_3 and C_3.

$$f_H =$$

PREPARED BY RINJU RAVINDRAN, AD HOC ASST. PROFESSOR-ECE, GCTK

Analysis of the Filter Circuit:

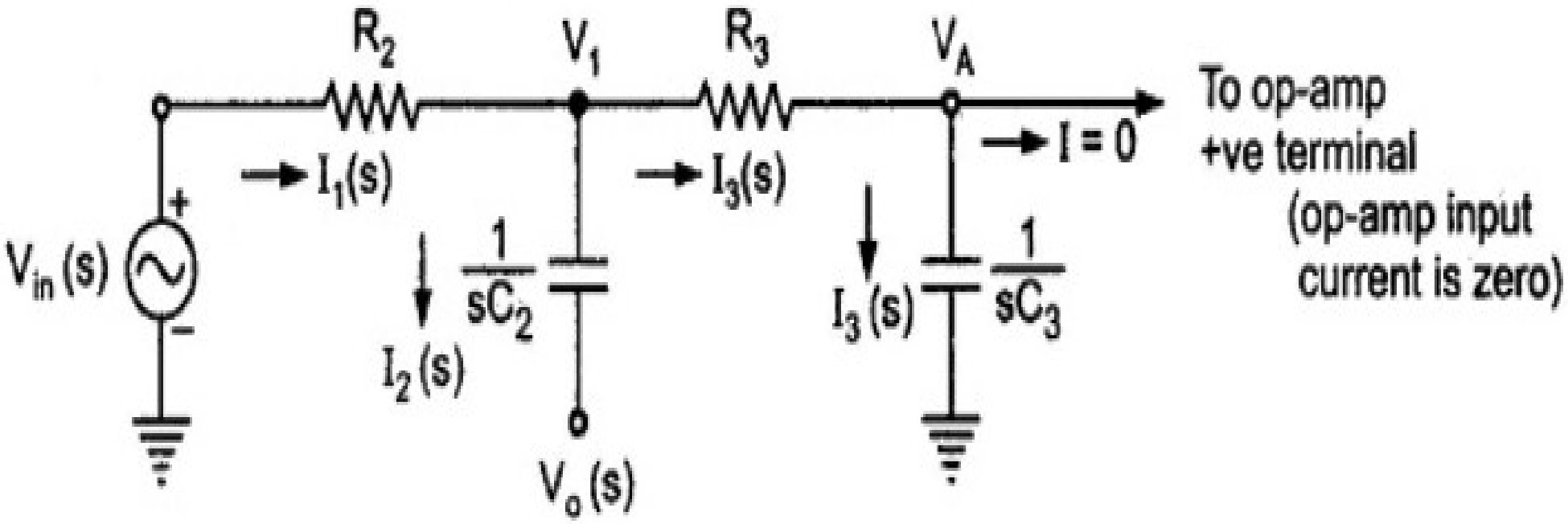

ECE, PROFESSOR-

$$I_1 = I_2 + I_3 \qquad \ldots (1)$$

$$\frac{V_{in} - V_1}{R_2} = \frac{V_1 - V_o}{\left(\frac{1}{sC_2}\right)} + \frac{V_1 - V_A}{R_3} \qquad \ldots (2)$$

$$V_A = V_1 \left[\frac{\frac{1}{sC_3}}{R_3 + \frac{1}{sC_3}} \right] \qquad \ldots (3)$$

$$V_A = \frac{V_1}{1 + sR_3 C_3} \qquad \ldots (4)$$

$$\therefore \quad V_1 = V_A (1 + s R_3 C_3)$$

Substituting V_1 in (2) and solving for V_A, we get

$$\frac{V_{in} - V_A\,(1+sR_3\,C_3)}{R_2} = \frac{V_A\,(1+s\,R_3\,C_3) - V_o}{\left(\frac{1}{sC_2}\right)} + \frac{V_A\,(1+s\,R_3\,C_3) - V_A}{R_3}$$

$$\frac{V_{in}}{R_2} + V_o\,(s\,C_2) = V_A\left[\frac{(1+s\,R_3\,C_3)}{R_2} + s\,C_2(1+s\,R_3\,C_3) + \frac{(1+s\,R_3\,C_3)}{R_3} - \frac{1}{R_3}\right]$$

$$\therefore\ \frac{V_{in}}{R_2} + V_o\,(s\,C_2) = V_A\left[\frac{R_3(1+s\,R_3C_3) + R_2R_3\,s\,C_2(1+s\,R_3C_3) + R_2(1+s\,R_3C_3) - R_2}{R_2\,R_3}\right]$$

PR
ECE, GO
ST. PROFESSOR-

Now, for op-amp in noninverting configuration,
$V_0 = A_F V_A$ where $A_F = 1 + R_F/R_1$

- $V_A = V_0 / A_F$

PREPARED BY RINJU RAVINDRAN, ADHOC ASST. PROFESSOR-ECE, GCEK

$$\frac{V_{in}}{R_2} + V_o s C_2 = \frac{V_o}{A_F}\left[\frac{R_3(1+sR_3C_3) + R_2R_3sC_2(1+sR_3C_3) + R_2(1+sR_3C_3) - R_2}{R_2R_3}\right]$$

$$\frac{V_{in}}{R_2} + V_o s C_2 = \frac{(1+sR_3C_3)V_o}{R_2A_F} + \frac{sC_2(1+sR_3C_3)V_o}{A_F} + \frac{(1+sR_3C_3)V_o}{R_3A_F} - \frac{V_o}{A_FR_3}$$

$$\frac{V_{in}}{R_2} = V_o\left[\frac{1+sR_3C_3}{R_2A_F} + \frac{sC_2(1+sR_3C_3)}{A_F} + \frac{(1+sR_3C_3)}{R_3A_F} - \frac{1}{A_FR_3} - sC_2\right]$$

$$\frac{V_{in}}{R_2} = V_o\left[\frac{1+sR_3C_3}{R_2A_F} + \frac{1+sR_3C_3}{A_F/sC_2} + \frac{1+sR_3C_3}{R_3A_F} - \frac{1}{A_FR_3} - \frac{1}{1/sC_2}\right]$$

$$= \frac{V_o}{A_F}\left[\frac{1+sR_3C_3}{R_2} + \frac{1+sR_3C_3}{1/sC_2} + \cancel{\frac{1}{R_3}} + \cancel{\frac{sR_3C_3}{R_3}} - \cancel{\frac{1}{R_3}} - \frac{A_F}{1/sC_2}\right]$$

$$= \frac{V_o}{A_F}\left[\frac{1}{R_2} + \frac{sR_3C_3}{R_2} + \frac{1}{1/sC_2} + \frac{sR_3C_3}{1/sC_2} + \frac{sR_3C_3}{R_3} - \frac{1}{1/A_FsC_2}\right]$$

$$= \frac{V_o}{A_F}\left[\frac{1}{R_2} + \frac{R_3C_3s}{R_2} + sC_2 + s^2R_3C_3C_2 + sC_3 - A_FsC_2\right]$$

$$\frac{V_{in}}{\cancel{R_2}} = \frac{V_o}{A_F}\left[\frac{1 + R_3C_3s + sR_2C_2 + s^2R_2R_3C_3C_2 + sR_2C_3 - A_FsR_2C_2}{\cancel{R_2}}\right]$$

$$V_{in} = \frac{V_o}{A_F}\left[S^2 R_2 R_3 C_2 C_3 + S\left(R_2 C_2 - A_F R_2 C_2 + R_2 C_3 + R_3 C_3\right) + 1\right]$$

$$V_{in} = \frac{V_o}{A_F}\left[S^2 R_2 R_3 C_2 C_3 + S\left(R_2 C_2 (1 - A_F) + R_2 C_3 + R_3 C_3\right) + 1\right]$$

$$\frac{V_o}{V_{in}} = \frac{A_F}{S^2 R_2 R_3 C_2 C_3 + S\left(R_2 C_2 (1 - A_F) + R_2 C_3 + R_3 C_3\right) + 1}$$

$$\frac{V_o}{V_{in}} = \frac{A_F / R_2 R_3 C_2 C_3}{S^2 + \left[\frac{1}{R_3 C_2} + \frac{1}{R_2 C_2} + \frac{1 - A_F}{R_3 C_3}\right] S + \frac{1}{R_2 R_3 C_2 C_3}} \rightarrow (5)$$

If $R_2 = R_3$ & $C_2 = C_3$

$$\frac{V_o}{V_{in}} = \frac{A_F / R^2 C^2}{S^2 + \left[\frac{3 - A_F}{RC}\right] S + \frac{1}{R^2 C^2}} \rightarrow (6)$$

As the order of s in the gain expression is two, the filter is called Second Order Low Pass Butterworth Filter.

The standard form of Second Order Butterworth Filter Transfer Function of any second order system is

Second order Low Pass Filter

$$\boxed{\frac{v_0}{v_{in}} = \frac{K\omega_n^2}{s^2 + 2\xi\omega_n s + \omega_n^2}}$$

---- (7)

PREPARED BY DR. S. SUNDARAN, ADHOC ASST. PROFESSOR-ECE, GCE

where

- ξ = damping of system
- ω_n = natural frequency of oscillations
- Comparing (5) and (7), we can say that

$$\omega_n^2 = \frac{1}{R_2 R_3 C_2 C_3} \quad \ldots (9)$$

In case of Second Order Low Pass Butterworth Filter, this frequency is nothing but the cut-off frequency.

PREPARED BY INDRANI ADHOU, ASST. PROFESSOR-ECE, SCEK

$$\omega_H^2 = \frac{1}{R_2 R_3 C_2 C_3}$$

$$(2\pi f_H)^2 = \frac{1}{R_2 R_3 C_2 C_3}$$

$$f_H = \frac{1}{2\pi\sqrt{R_2 R_3 C_2 C_3}}$$

PKR
ECE, GC

Replacing s by jω, the transfer function can be written in the frequency domain and hence, finally, can be expressed in the polar form as,

$$\frac{V_o}{V_{in}} = \left|\frac{V_o}{V_{in}}\right| \angle \phi$$

PREPARED BY RIN
ADHOC ASST. PROFESSOR-
ECE, GCEK

When $R_2 = R_3$ and $C_2 = C_3$, $\omega_H^2 = 1/R^2C^2$

Eqn 6 becomes ------ $V_o/V_{in} =$

$V_o/V_{in} =$

$=$

$||$ $=$

PREPARED BY RINJU RAVINDRAN, ADHOC ASST. PROFESSOR-
ECE, GCEK

- For 2nd order Butterworth LP filter, damping factor .
- || =

$$\left|\frac{V_o}{V_{in}}\right| = \frac{A_F}{\sqrt{1 + \left(\frac{f}{f_H}\right)^4}} \quad \ldots (11)$$

NIU RAVINDRAN, ADHOC ASST. PROFESSOR-

- At the f_H, the gain is 0.707 A_F i,e. 3 dB down from its 0 Hz level.
- After, f_H ($f > f_H$), the gain rolls off at a frequency rate of 40 dB/decade,.
- Hence, the slope of the response after f_H is – 40 dB/decade.

PREPARED BY MINJU RAVINDRAN, ADHOC ASST. PROFESSOR-ECE, GCEK

Filter Design steps:

- Except for having twice the roll off rate in the stop band, freq response of 2nd order LPF is identical to first order type.
- Design steps are identical

1) Choose the cut-off frequency f_H,

2) The design can be simplified by selecting $R_2 = R_3 = R$ and $C_2 = C_3 = C$ and choose a value of C = 1 μF.

3) Calculate the value of R from the equation,

$$R = \frac{1}{2\pi f_H C}$$

PREPARED BY RENIU RAVINDRAN, ADHOC ASST. PROFESSOR-ECE, GCEK

4) As $R_2 = R_3 = R$ and $C_2 = C_3 = C$, the pass band voltage gain $A_F = (1 + R_f/R_1)$ of the second order LPF has to be equal to 1.586. $A_F = 1.586$

So $R_F = 0.586\ R_1$

This gain is necessary to guarantee Butterworth response.

{ comparing eqns we have

$$\frac{2}{0.707}$$

, hence we get $A_F = 1.586$ }

PREPARED BY RINJU RAVINDRAN, ADHOC ASST. PROFESSOR, ECE, GCEK

- Hence, choose a value of $R_1 \leq 100\ k\Omega$ and calculate the corresponding value of R_F.
- The frequency scaling method for first order filter is equally applicable to the Second Order Low Pass Butterworth Filter.

PREPARED BY RINJU RAVINDRAN, ADHOC ASST. PROFESSOR-
ECE, GCEK

NUMERICALS

1. a) Design a 2nd order LPF with cut off freq of 1 KHZ.

   b) Also plot the freq response of LPF.

PREPARED BY RINJU RAVINDRAN, ADHOC ASST. PROFESSOR-ECE, GCEK

1. $f_H = 1$ kHz.
2. Let $C_2 = C_3 = 0.0047\ \mu$F.
3. Then

$$R_2 = R_3 = \frac{1}{(2\pi)(10^3)(47)(10^{-10})} = 33.86\ \text{k}\Omega$$

(Use $R_2 = R_3 = 33\ \text{k}\Omega$.)

4. Since R_F must be equal to $0.586R_1$, let R_1 equal 27 kΩ. Therefore,

$$R_F = (0.586)(27\ \text{k}\Omega) = 15.82\ \text{k}\Omega$$

(Use $R_F = 20$ kΩ pot.) Thus the required components are

$$R_2 = R_3 = 33\ \text{k}\Omega$$

$$C_2 = C_3 = 0.0047\ \mu\text{F}$$

$$R_1 = 27\ \text{k}\Omega \quad \text{and} \quad R_F = 15.8\ \text{k}\Omega\ (20\text{k} - \Omega\ \text{pot})$$

$$\left|\frac{v_o}{v_{in}}\right| = \frac{A_F}{\sqrt{1 + (f/f_H)^4}}$$

where $A_F = 1.586$ and $f_H = 1$ kHz. The frequency response of the second-order low-pass filter of Example 8-4 is shown in Figure 8-5.

TABLE 8-2 FREQUENCY RESPONSE DATA FOR EXAMPLE 8-4

Frequency, f (Hz)	Gain magnitude, $\lvert v_o/v_{in}\rvert$	Magnitude (dB) = $20 \log\lvert v_o/v_{in}\rvert$
10	1.59	4.01
100	1.59	4.01
200	1.58	4.00
700	1.42	3.07
1,000	1.12	1.00
3,000	0.18	−15.13
7,000	0.03	−29.80
10,000	0.02	−35.99
30,000	1.76×10^{-3}	−55.08
100,000	1.59×10^{-4}	−75.99

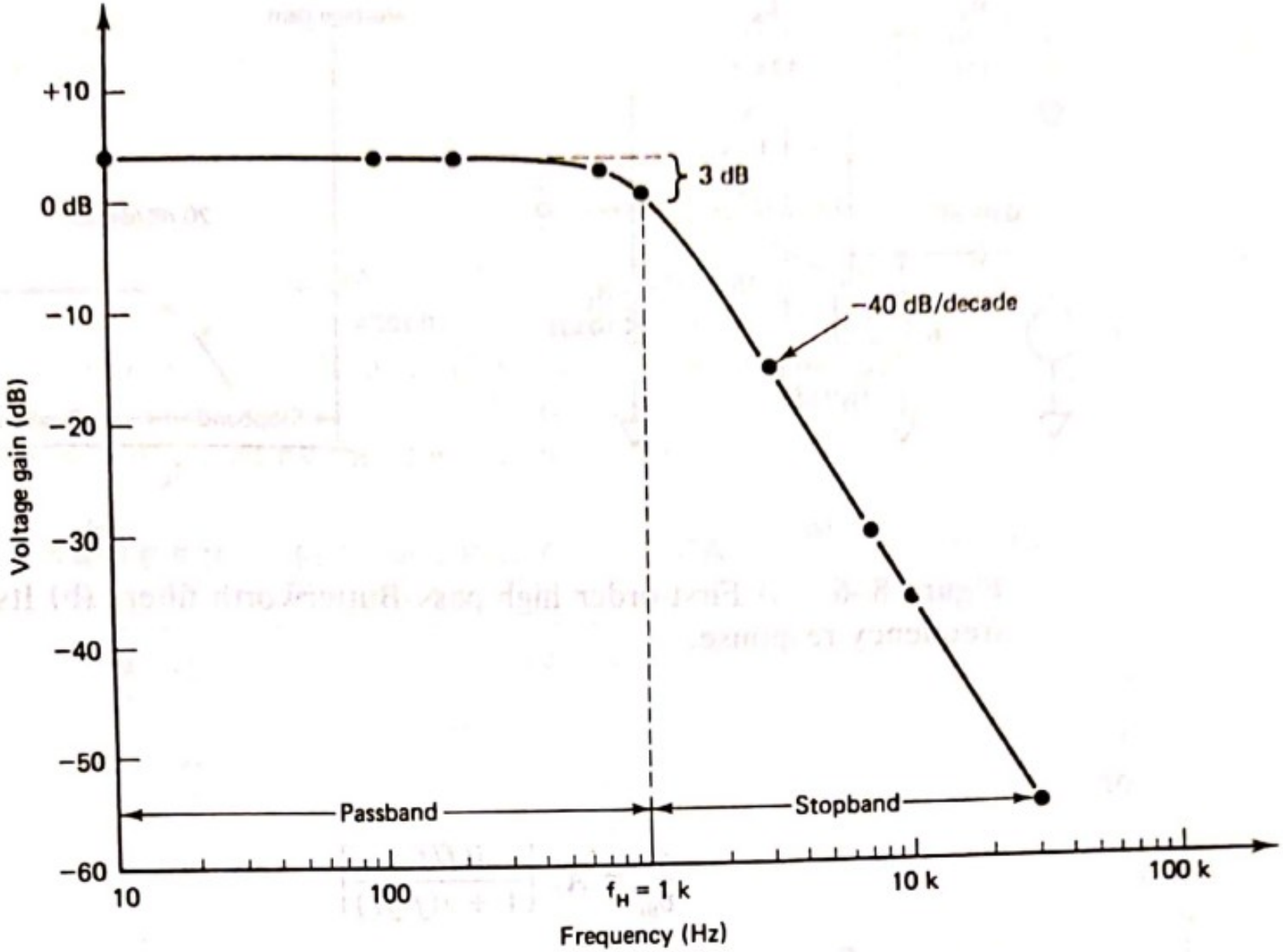

Figure 8–5 Frequency response for Example 8-4.

PROFESSOR-E