BAND REJECT FILTER

PREPARED BY RINJU RAVINDRAN, ADHOC ASST. PROFESSOR - ECE, GCEK

Band Reject Filter/ Band Stop/ Band Elimination Filter

- In this filter ckt, frequencies are attenuated in the stop band and passed outside this band.

(i) wide and

(ii) narrow band reject .

PREPARED BY RINJU RAVINDRAN, ADHOC ASST. PROFESSOR - ECE, GCEK

Wide Band Reject Filter

- Fig. (a) shows wide band reject filter circuit using a low pass filter, a high pass filter and a summing amplifier.
- **For a proper band reject response**,

i. the low cutoff frequency f_L of the high pass filter must be larger than the high cutoff frequency f_H of the low pass filter.

ii. Also, the pass band gain of both high pass and low pass sections must be equal.

PREPARED BY PINJU RAVINDRAN, ADHOC ASST. PROFESSOR - ECE, GCEK

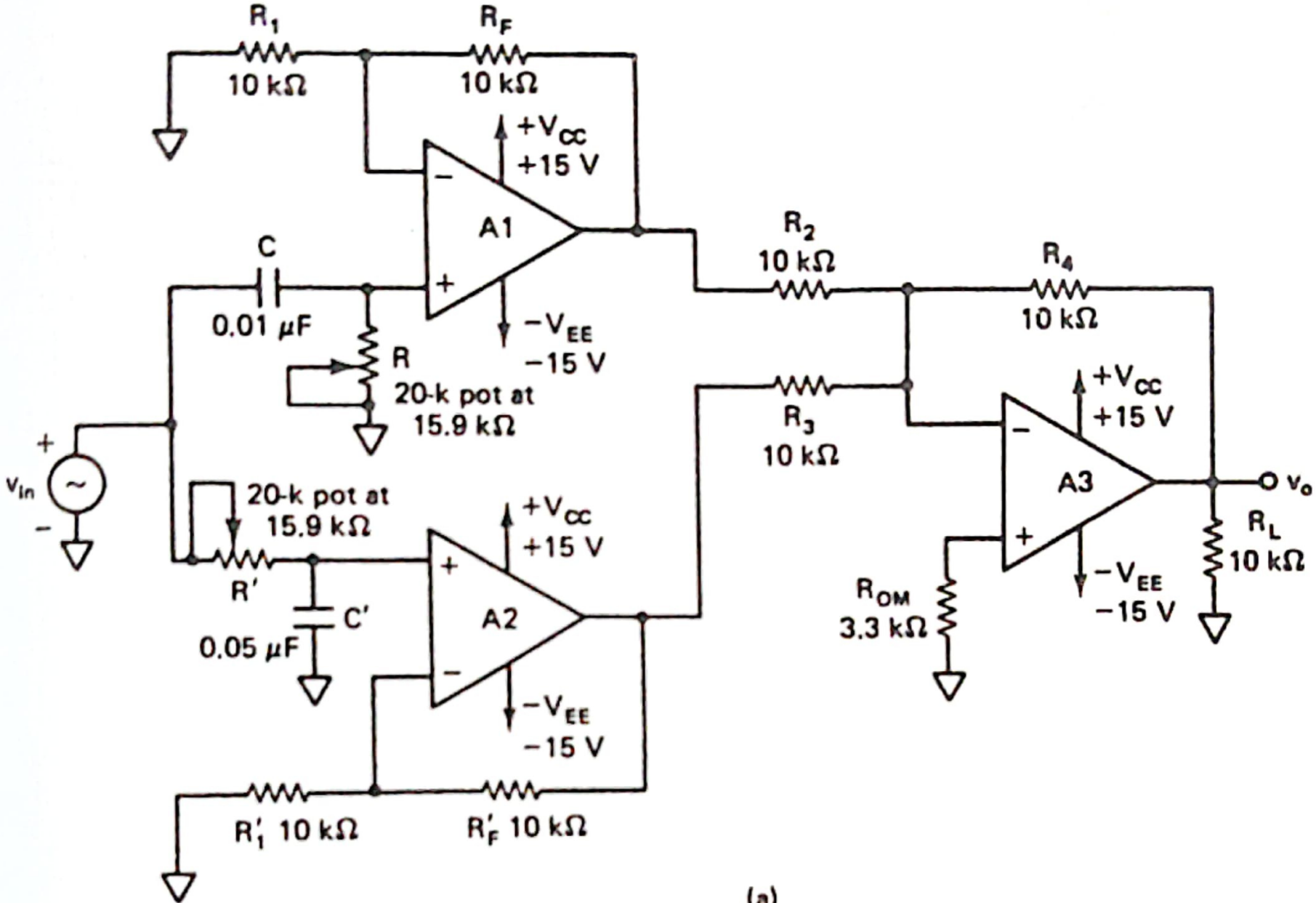
R1
10 kΩ
RF
10 kΩ
+Vcc
+15 V
A1
C
0.01 μF
R
20-k pot at
15.9 kΩ
−VEE
−15 V
R2
10 kΩ
R4
10 kΩ
R3
10 kΩ
+Vcc
+15 V
A3
vo
RL
10 kΩ
ROM
3.3 kΩ
−VEE
−15 V
vin
20-k pot at
15.9 kΩ
R′
C′
0.05 μF
+Vcc
+15 V
A2
−VEE
−15 V
R′1 10 kΩ
R′F 10 kΩ

(a)

SSOR -

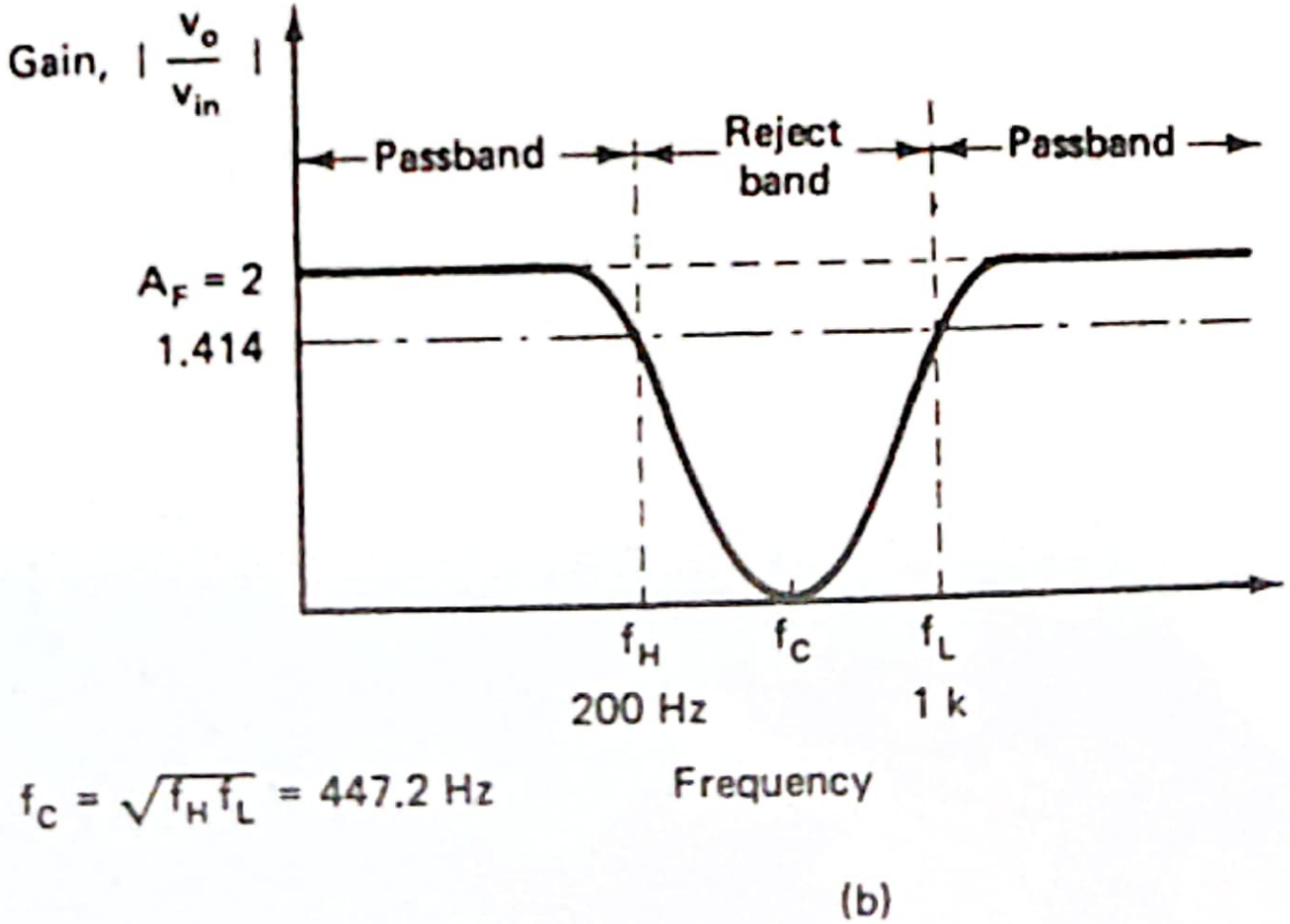

FIGURE 7–14 Wide band-reject filter. (a) Circuit. (b) Frequency response.

1. Design a wide band reject filter having f_H = 200Hz and f_L = 1 KHz.

PREPARED BY RINJU RAVINDRAN, ADHOC ASST. PROFESSOR - ECE, GCEK

SOLUTION

In Example 7–7, a wide band-pass filter was designed with $f_L = 200$ Hz and $f_H = 1$ kHz. In this example these band frequencies are interchanged, that is, $f_L = 1$ kHz and $f_H = 200$ Hz. This means that we can use the same components as in Example 7–7, but interchanged between high-pass and low-pass sections. Therefore, for the low-pass section, $R' = 15.9\ \text{k}\Omega$ and $C' = 0.05\ \mu\text{F}$, while for the high-pass section

$$R = 15.9\ \text{k}\Omega \text{ and } C = 0.01\ \mu\text{F}$$

Since there is no restriction on the passband gain, use a gain of 2 for each section. Hence let

$$R_1 = R_F = R_1' = R_F' = 10\ \text{k}\Omega$$

PREPA
ECE, GCEK

Furthermore, the gain of the summing amplifier is set at 1; therefore,

$$R_2 = R_3 = R_4 = 10\ \text{k}\Omega$$

Finally, the value of $R_{OM} = R_2 \| R_3 \| R_4 \cong 3.3\ \text{k}\Omega$.

The complete circuit is shown in Figure 7–14(a), and its response is shown in Figure 7–14(b). The voltage gain changes at the rate of 20 dB/decade above f_H and below f_L, with a maximum attenuation occurring at f_C.

PREPARED BY RINJU
ECE, GCEK

Narrow Band Reject Filter

- Also called the **notch filter**.
- commonly used for the attenuation of a single frequency.
- For eg:, it may be necessary to attenuate 60 Hz or 400 Hz noise or hum signals in a circuit.
- The most commonly used notch filter is the Twin T network, shown in Fig.(a), which is a passive filter composed of two T shaped networks.

PREPARED BY RINJU RAVENDRAN, ADHOC ASST. PROFESSOR - ECE, GCERK

- One T network is made up of two resistors and a capacitor, while the other is made of two capacitors and a resistor.
- The frequency at which maximum attenuation occurs is called the notch-out frequency, given by

$$f_N = \frac{1}{2\pi RC}$$

PREPARED BY RINI RAVINDRAN, ADHOC ASST. PROFESSOR-
ECE, GCEK

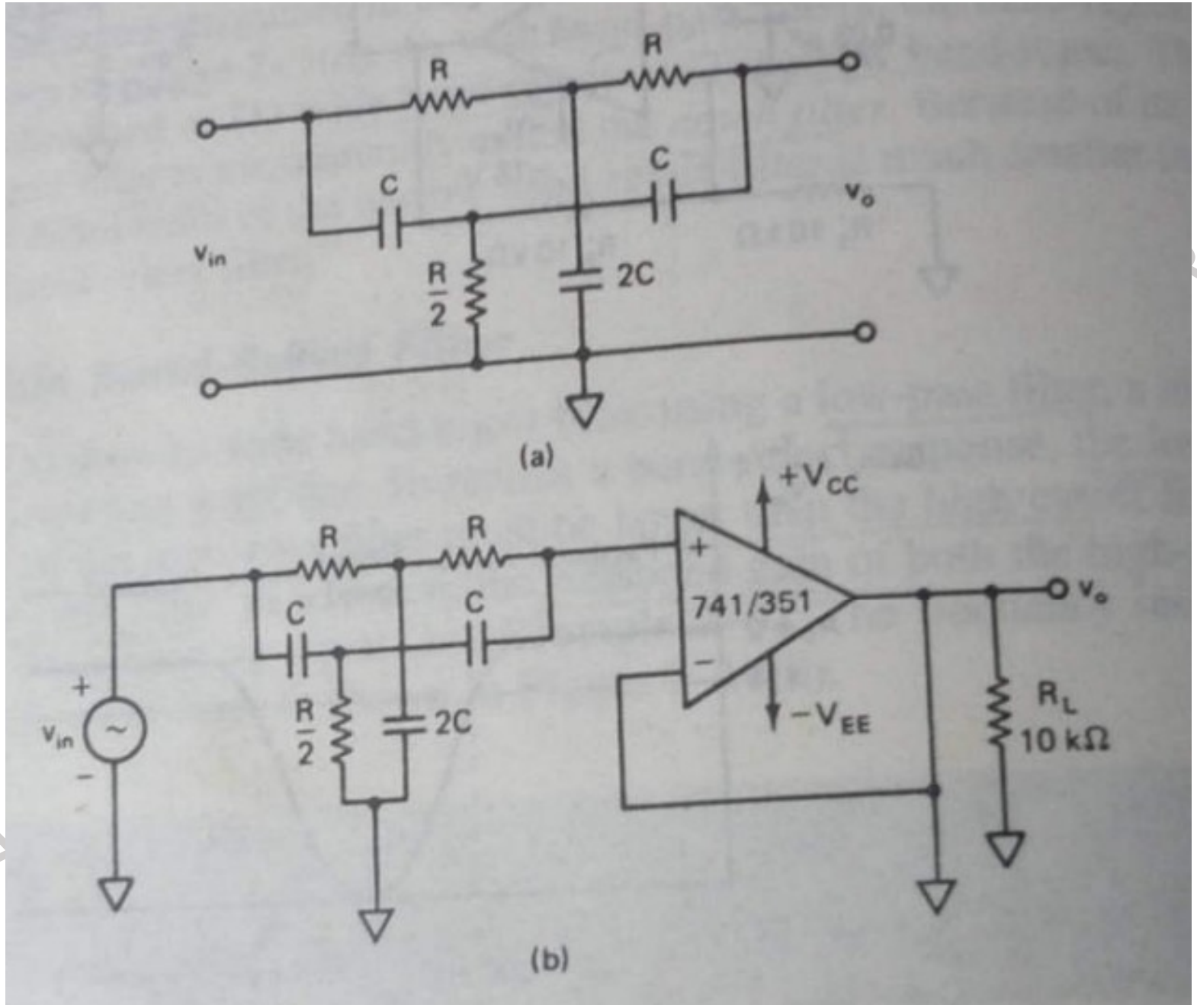

PREPA
ECE,
ROFESSOR -

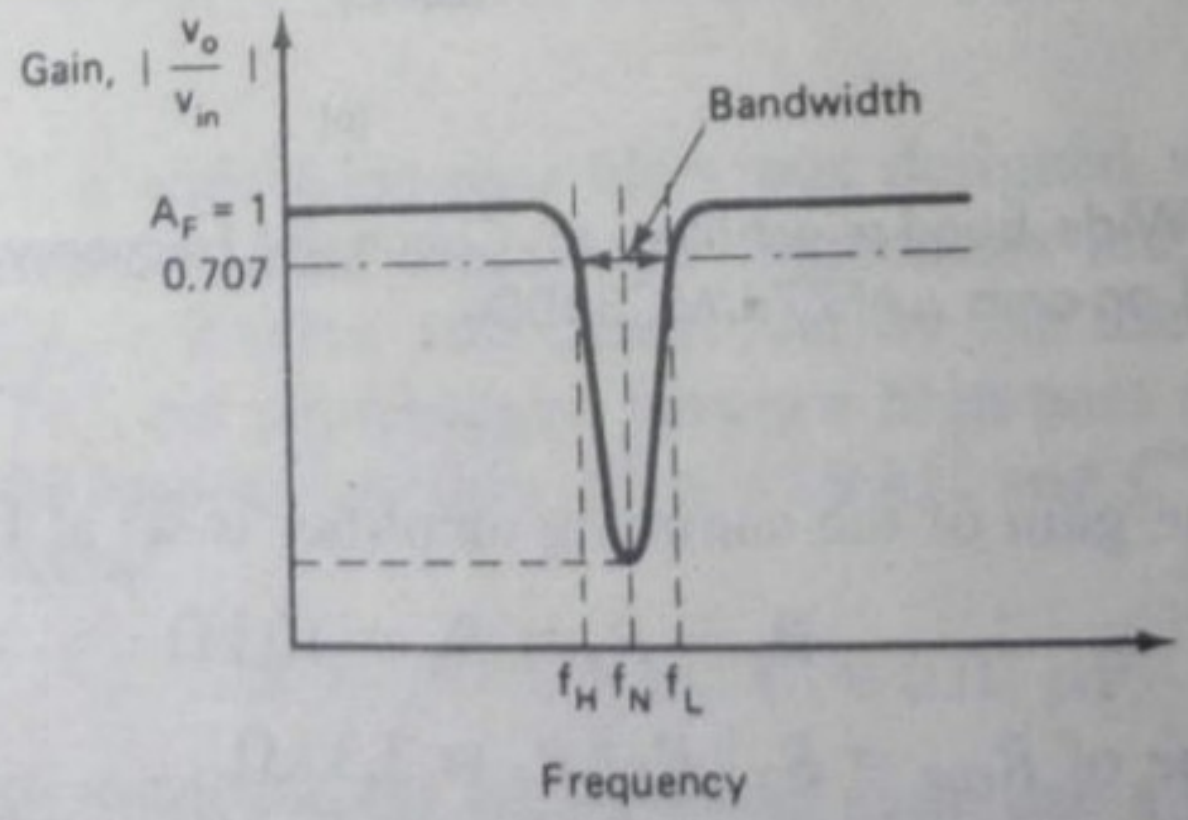

(c)

FIGURE 7–15 (a) Twin-T notch filter. (b) Active notch filter. (c) Frequency response of the active notch filter.

- The T-networks provide alternative forward paths through which V_i can reach the amplifier's input:
  a) the low-frequency path R-R and
  b) the high-frequency path C-C.

- At low frequencies, reactance offered by capacitor's is high, $\left(X_C = \frac{1}{2\pi f C}\right)$ capacitors behaves as open-ckt, input V_i reaches amplifier input via R-R.

- At high frequencies, reactance offered by capacitor's becomes low, capacitors behaves as short-ckt, input V_i reaches amplifier input via C-C.

- At intermediate frequencies, the two paths provide opposing phase angles, indicating a tendency of the two forward signals to cancel each other out at the amplifiers input.

PREPARE
ECE, GC
. PROFESSOR -

- One disadvantage of the passive twin T network is that it has a relatively low figure of merit, Q.
- Higher the value of Q, the more selective is the filter. Therefore, to increase the Q of the twin T network significantly, it should be used with a voltage follower, as shown in Fig.(b).
- Fig (c) shows the frequency response of a notch filter.

- The Notch filters are used in communications, biomedical instruments, etc. where the elimination of certain frequencies is necessary.

PREPARED BY RINJU RAVINDRAN, ADHOC ASST. PROFESSOR - ECE, GCEK

Design

- To design an active notch filter for a specific notch out freq f_N , choose value of C.
- Then calculate R =
- Notch freq
- Q=
- H_{0N} = K = 1+ . K=1 for voltage follower case.

PREPARED BY RINJU RAVINDRAN, ADHOC ASST. PROFESSOR - ECE, GCEK

Q=

- From freq response it is clear that ckt reject freq around with max attenuation while passes all other freqs with max pass band gain.

Notch (Band Reject)	$H_N(s) = \dfrac{H_{0N}\left(\omega_0^2 + s^2\right)}{s^2 + s\dfrac{\omega_0}{Q} + \omega_0^2}$

VINDRAN, ADHOC ASST. PROFESSOR -
PRE
ECE, GCE

1. Design a 60Hz active notch filter.

PREPARED BY RINJU RAVINDRAN, ADHOC ASST. PROFESSOR - ECE, GCEK

SOLUTION

Let $C = 0.068\ \mu F$. Then, from Equation (7–16), the value of R is

$$R = \frac{1}{2\pi f_N C} = \frac{1}{(2\pi)(60)(68)(10^{-9})} = 39.01\ k\Omega$$

(Use 39 kΩ.) For $R/2$, parallel two 39-kΩ resistors; for the $2C$ component, parallel two 0.068-μF capacitors.

PREPARED BY
ECE, GCEK

Design a notch filter having $f_0 = 60Hz$ and $BW = 5Hz$

Sol^n:- $Q = \frac{f_0}{BW} = \frac{60}{5} = 12$

$f_0 = \frac{1}{2\pi RC} = 60Hz$

let $C = 100nf$, ie $2C = 200nf$

ie $R = \frac{1}{2\pi fC} = 26.526 K\Omega$

Select $\boxed{R = 27K\Omega}_{(std)}$

$Q = \frac{1}{4-2K} \Rightarrow K = 4 - \frac{1}{Q} = 4 - \frac{1}{12} = \frac{47}{24}$

$K = 1 + \frac{R_A}{R_B} = \frac{47}{24} \Rightarrow \frac{R_A}{R_B} = \frac{23}{24}$

let $\boxed{R_B = 10K\Omega}$, $R_A = 9.53K\Omega$

Select $\boxed{R_A = 9.5K\Omega}_{(std)}$

PREPARED BY ... ASST. PROFESSOR - ECE, GCE...

Second Order Filter Characteristics

2nd Order Filters	
Filter Type	**Transfer Function**
Low Pass	$H_{LP}(s) = \dfrac{H_{0LP}\omega_0^2}{s^2 + s\dfrac{\omega_0}{Q} + \omega_0^2}$
High Pass	$H_{HP}(s) = \dfrac{H_{0HP}s^2}{s^2 + s\dfrac{\omega_0}{Q} + \omega_0^2}$
Band Pass	$H_{BP}(s) = \dfrac{H_{0BP}\dfrac{\omega_0}{Q}s}{s^2 + s\dfrac{\omega_0}{Q} + \omega_0^2}$
Notch (Band Reject)	$H_N(s) = \dfrac{H_{0N}\left(\omega_0^2 + s^2\right)}{s^2 + s\dfrac{\omega_0}{Q} + \omega_0^2}$

Here

PRE
ECE, GCE