BAND PASS FILTER

PREPARED BY RINJU RAVINDRAN, ADHOC ASST. PROF. ECE, GCEK

BAND PASS FILTER

- A band-pass filter has a passband between two cutoff frequencies f_L and f_H such that $f_H > f_L$.
- Any frequency outside this passband is attenuated.
- There are two types of band-pass filters:

  wide band pass and narrow band pass.
- Although there is no dividing line between the two, it is possible to identify them from the

PREPARED BY RINJU RAVINDRAN, AD HOC ASST. PROF. ECE, GCEK

A filter may be classified as

wide band pass if $Q < 10$

narrow band pass if $Q > 10$.

- The higher the value of Q, the more selective the filter or the narrower its bandwidth (BW) will be. Thus, Q is a measure of the selectivity of a filter.
- The relationship of Q to 3-dB bandwidth and center frequency f_c is given by

PREPARED BY RINJU RAVINDRAN, AD HOC ASST. PROF. ECE, GCEK

For a wide-band-pass filter, the center frequency f_c can be defined a

$$f_C =$$

where f_L is the low cutoff freq (Hz)

f_H is the high cutoff freq (Hz)

In a narrow-bandpass filter, the output peaks at the center frequency f_c.

PREPARED BY RINIU RAVENDRAN, ADHOC ASST. PROF. ECE, GCEK

WIDE BAND PASS FILTER

PREPARED BY RINJU RAVINDRAN, AD HOC ASST. PROF. ECE, GCEK

WIDE BAND PASS FILTER

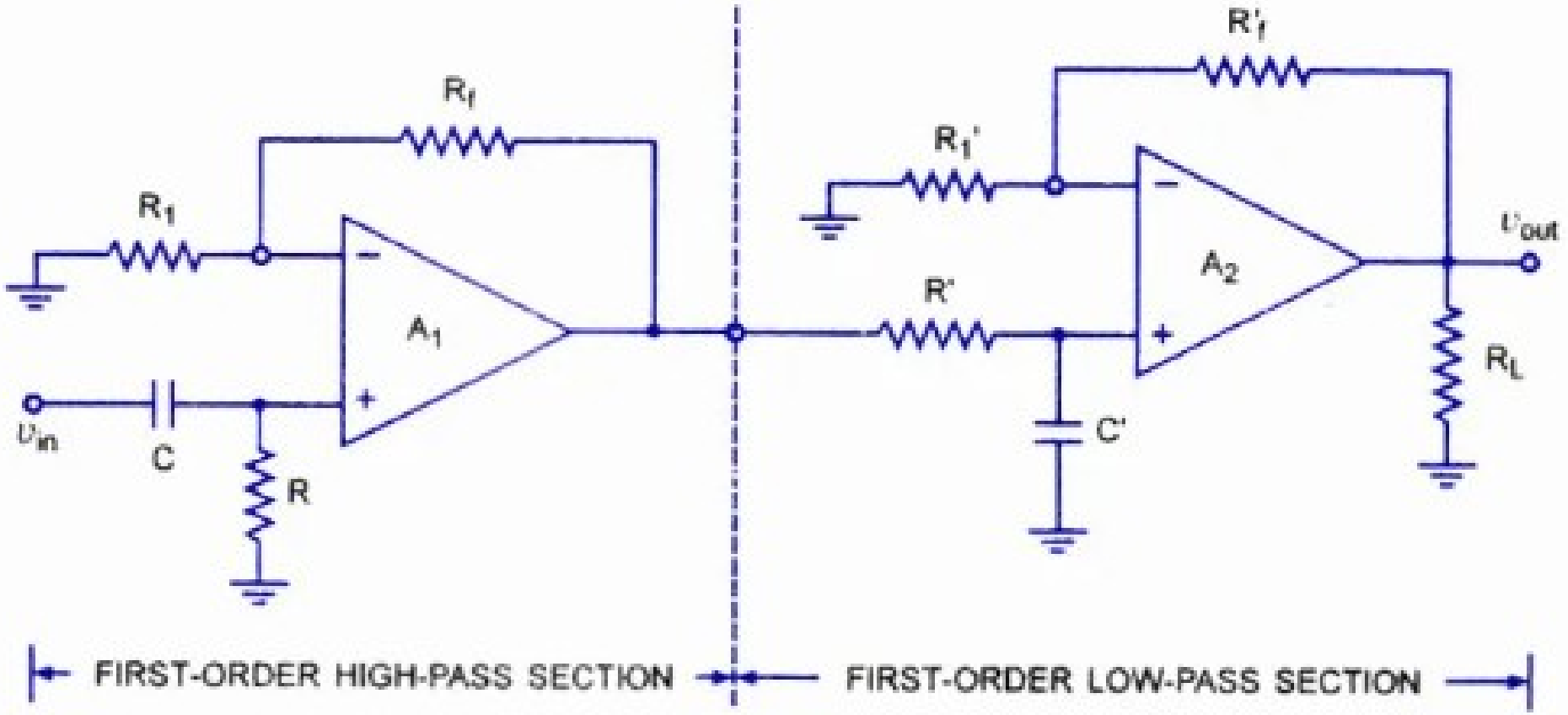

Circuit Diagram

Wide Band Pass Filter

PROF. ECE,
PRF
GC

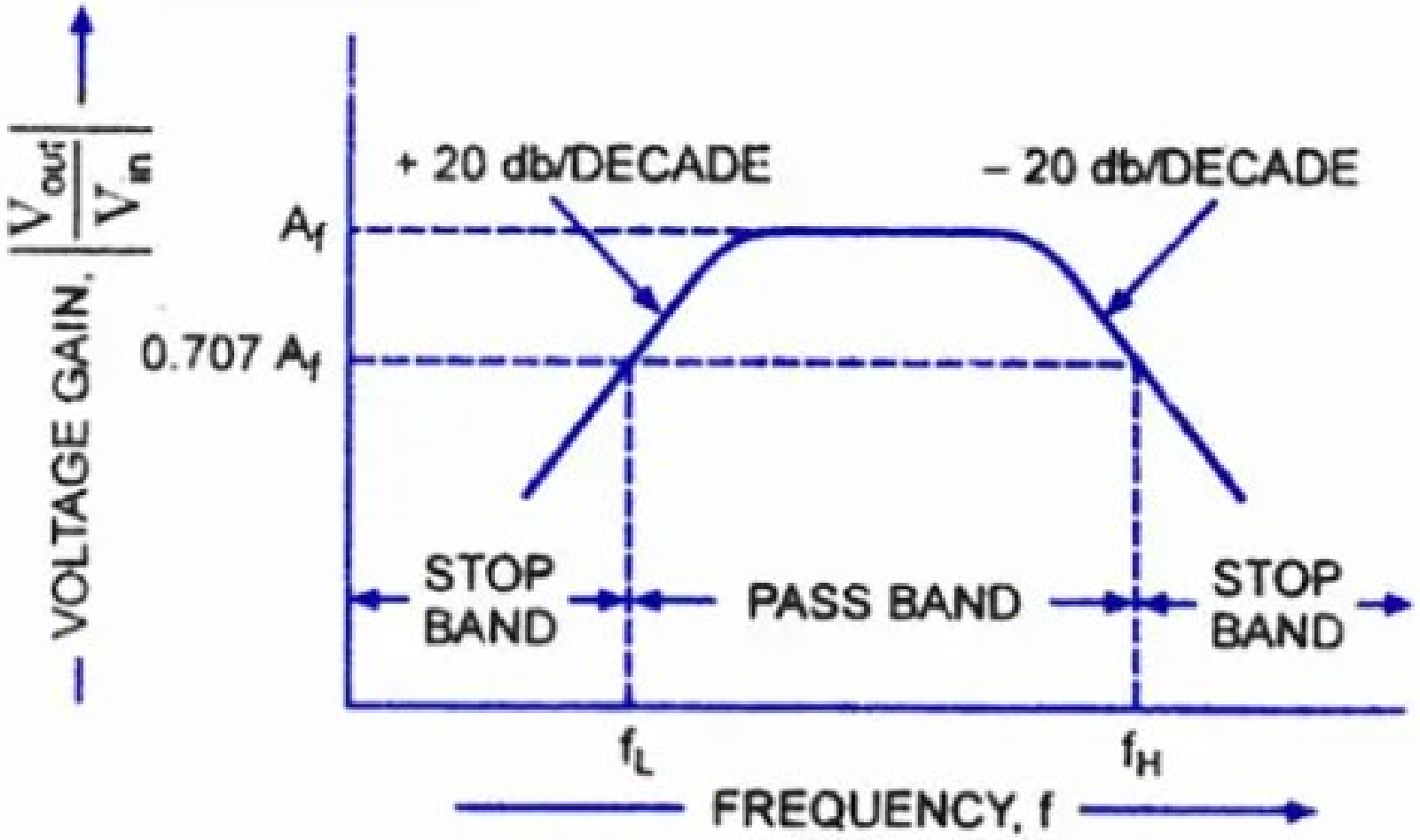

Frequency Response

Frequency Response wide bandpass filter

PREP
GCF
OF. ECE,

- A wide bandpass filter can be formed by simply cascading high-pass and low-pass sections.
- To form a ± 20 db/ decade bandpass filter, a first-order high-pass and a first-order low-pass sections are cascaded;
- for a ± 40 db/decade bandpass filter, second-order high- pass filter and a second-order low-pass filter are connected in series, and so on.
- It means that, the order of the bandpass filter is governed by the order of the high-pass and low-pass filters it consists of.

PREPARED BY KENJU REVINDRAN, ADHOC ASST. PROF. ECE, GCEK

Band pass filter

PROF. ECE,

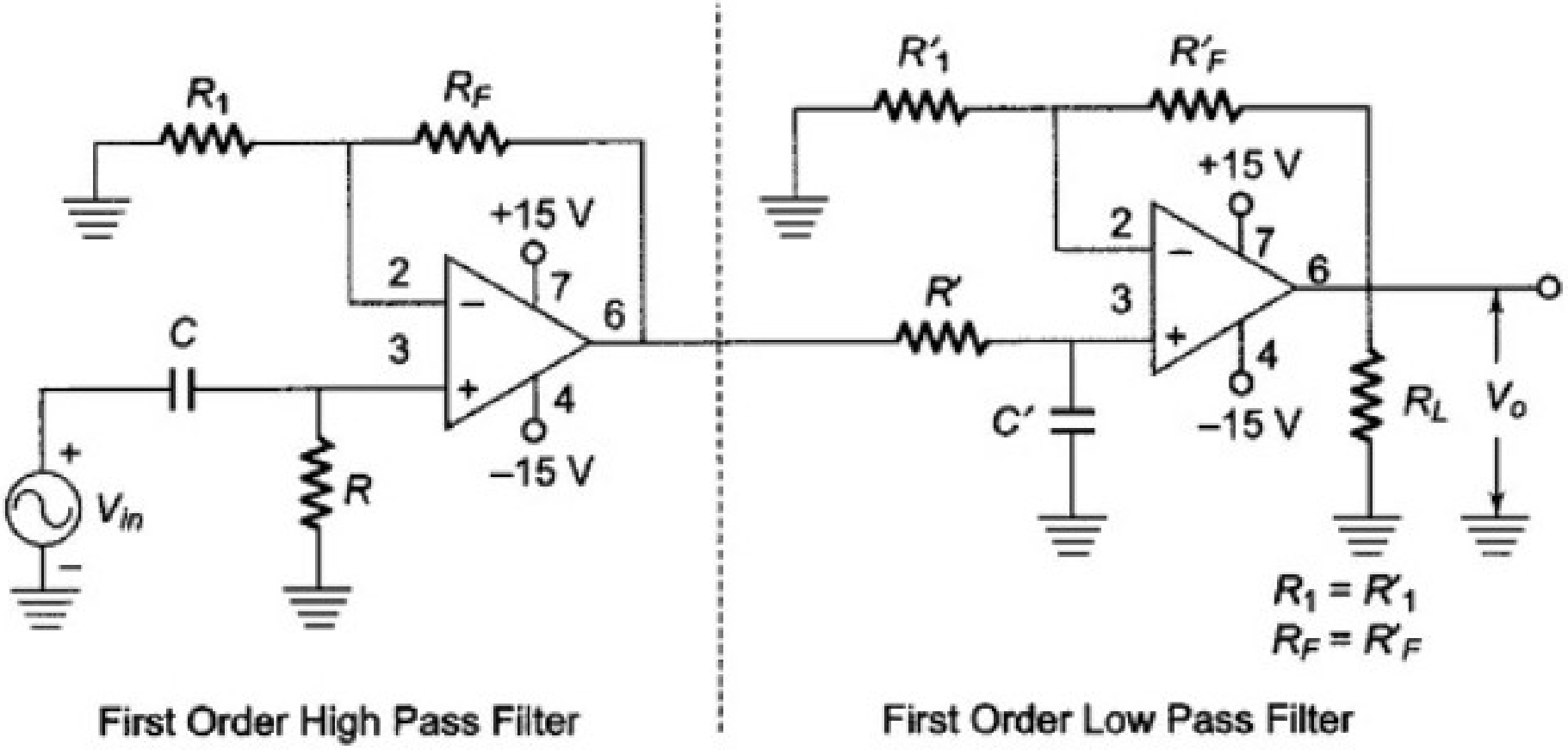

Fig. 15.16 (a) ± 20 db/decade Band Pass Filter

1st order HP $f_L =$

1st order LP $f_H =$

$$|H_{WBP}| = |H_{HP}| * |H_{LP}|$$

PREPARED BY RINJU RAVINDRAN, ADHOC ASST. PROF. ECE, GCEK

$| \; | \; =$

Where A_{FT} = total passband gain

f = freq of i/p s/g (Hz)

f_L =lower cut off freq (Hz) $)^2$

f_H =high cut off freq (Hz)

PREPARED BY RINJU RAVINDRAN, ADHOC ASST. PROF. ECE, GCEK

2nd order Band pass filter

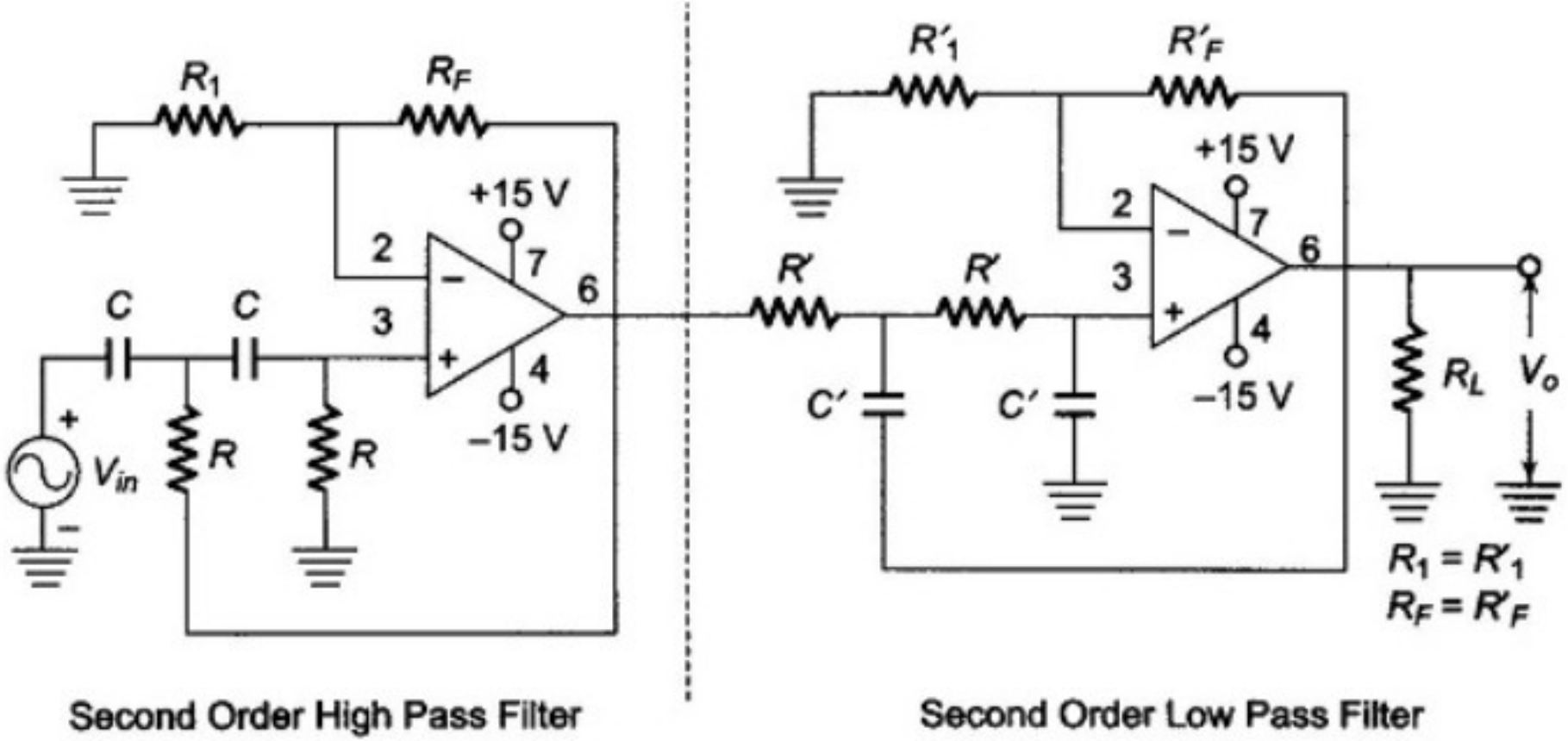

Fig. 15.16 (c) Second Order Band Pass Filter

PROF. ECE,

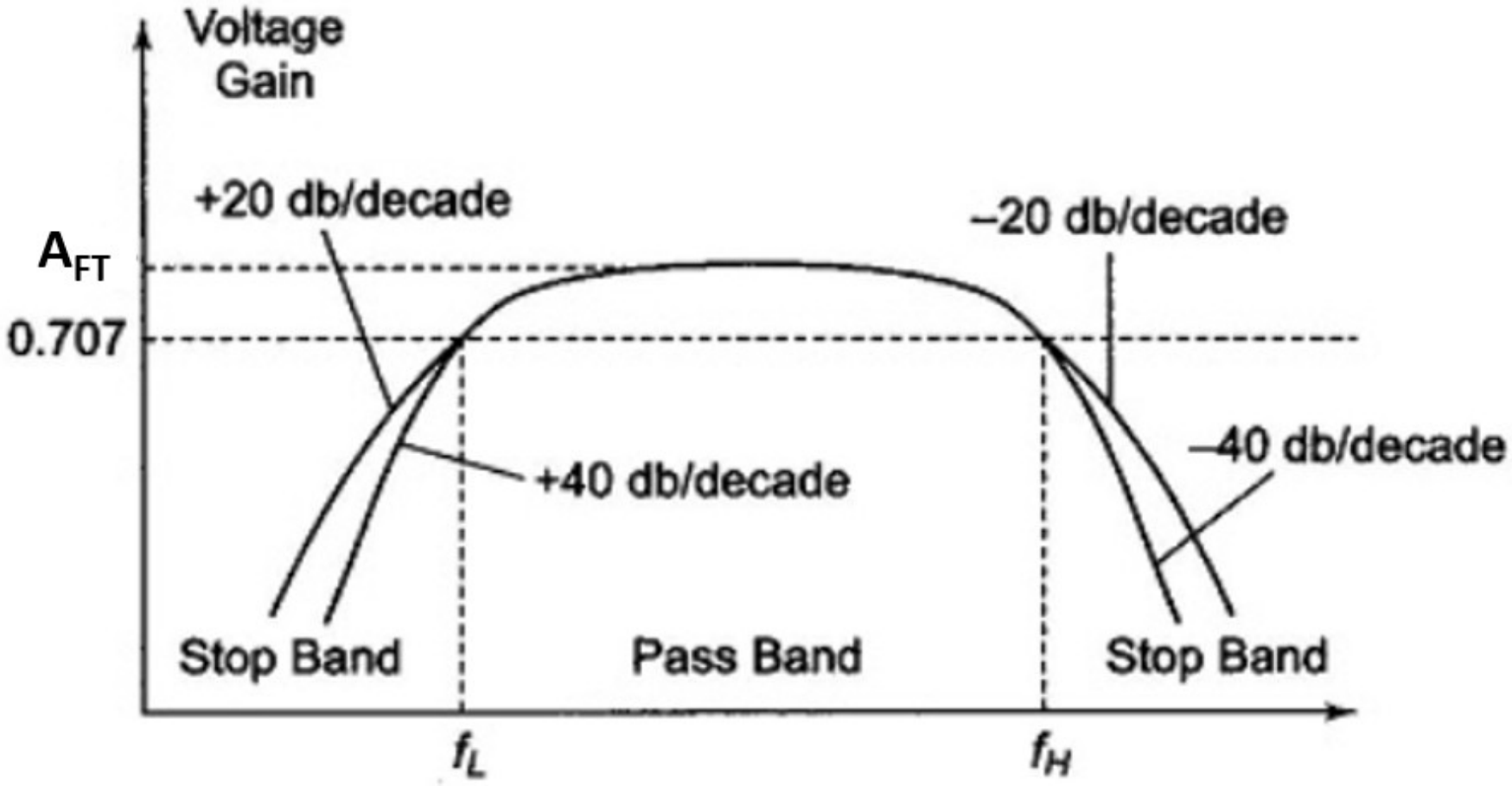

Fig. 15.16 (b) Frequency Response of a Band Pass Filter

2nd order HP $f_L =$ assuming equal res & capr.

2nd order LP $f_H =$,,

$$|H_{WBP}| = |H_{HP}| * |H_{LP}|$$

PREPARED BY RINJU RAVINDRAN, ADHOC ASST. PROF. ECE, GCEK

Where A_{FT} = total passband gain

f = freq of i/p s/g (Hz)

f_L =lower cut off freq (Hz)

f_H =high cut off freq (Hz)

PREPARED BY RINJU RAVINDRAN, ADHOC ASST. PROF. ECE, GCEK

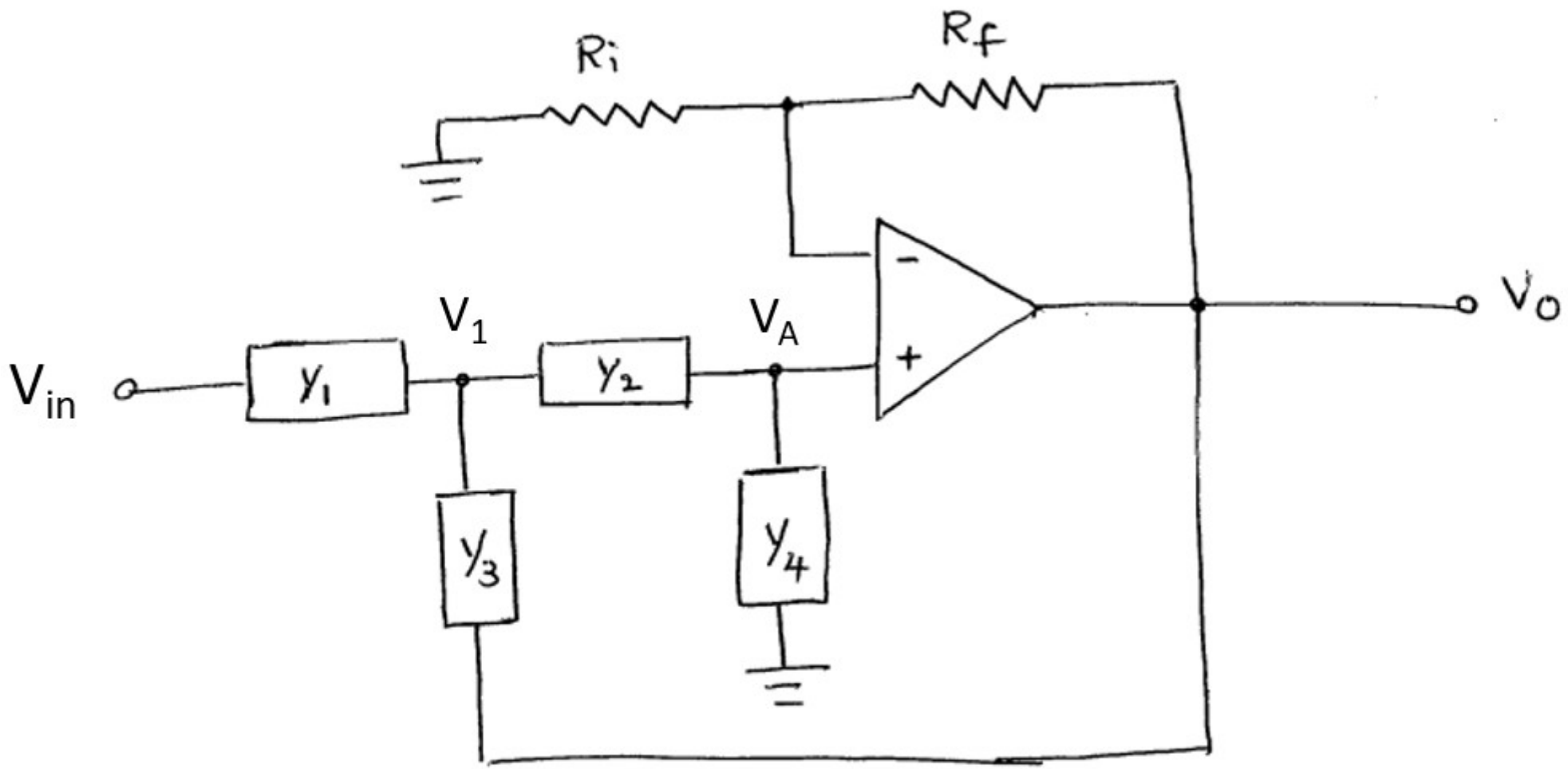

Fig: sallen-Key filter (General second order filter)

Simplifying $\frac{V_o}{V_{in}} = \frac{A_F Y_1 Y_2}{Y_4(Y_1+Y_2+Y_3)+Y_1 Y_2+(1-A_F)Y_2 Y_3}$

2nd order LPF,

$$Y_1 = Y_2 = \frac{1}{R'}$$

$$Y_3 = Y_4 = SC'$$

Solve this.

2nd order HPF, we have

$$Y_1 = Y_2 = SC$$

$$Y_3 = Y_4 = \frac{1}{R}$$

Solve using this

NUMERICALS

1. a) Design a wide band pass filter with f_L = 200 HZ, f_H=1 KHz and a pass band gain = 4.

   b) Also plot the freq response.

   c) Calculate Q for the filter.

PREPARED BY RINJU RAVINDRAN, ADHOC ASST. PROF. ECE, GCEK

- Since band pass gain = 4 , gain of HP as well as LP sections could be set = 2.
- Find R and R’ using eqn for 1st order LP and HP design.
- Find f_c =
- Q = f_c /BW = 0.56 < 10 as expected for wide band pass filter

PREPARED BY RINJU RAVINDRAN, ADHOC ASST. PROF. ECE, GCEK

TABLE 7–5 Frequency Response Data for the Band-Pass Filter of Example 7–7.

Input frequency, f(Hz)	*Gain magnitude,* $\lvert v_o/v_{in} \rvert$	*Magnitude (dB) =* $20 \log \lvert v_o/v_{in} \rvert$
10	0.1997	−13.99
30	0.5931	−4.54
100	1.780	5.01
200	2.774	8.861
447.2	3.33	10.46
700	3.151	9.969
1,000	2.774	8.861
2,000	1.780	5.001
7,000	0.5655	−4.95
10,000	0.3979	−8.004

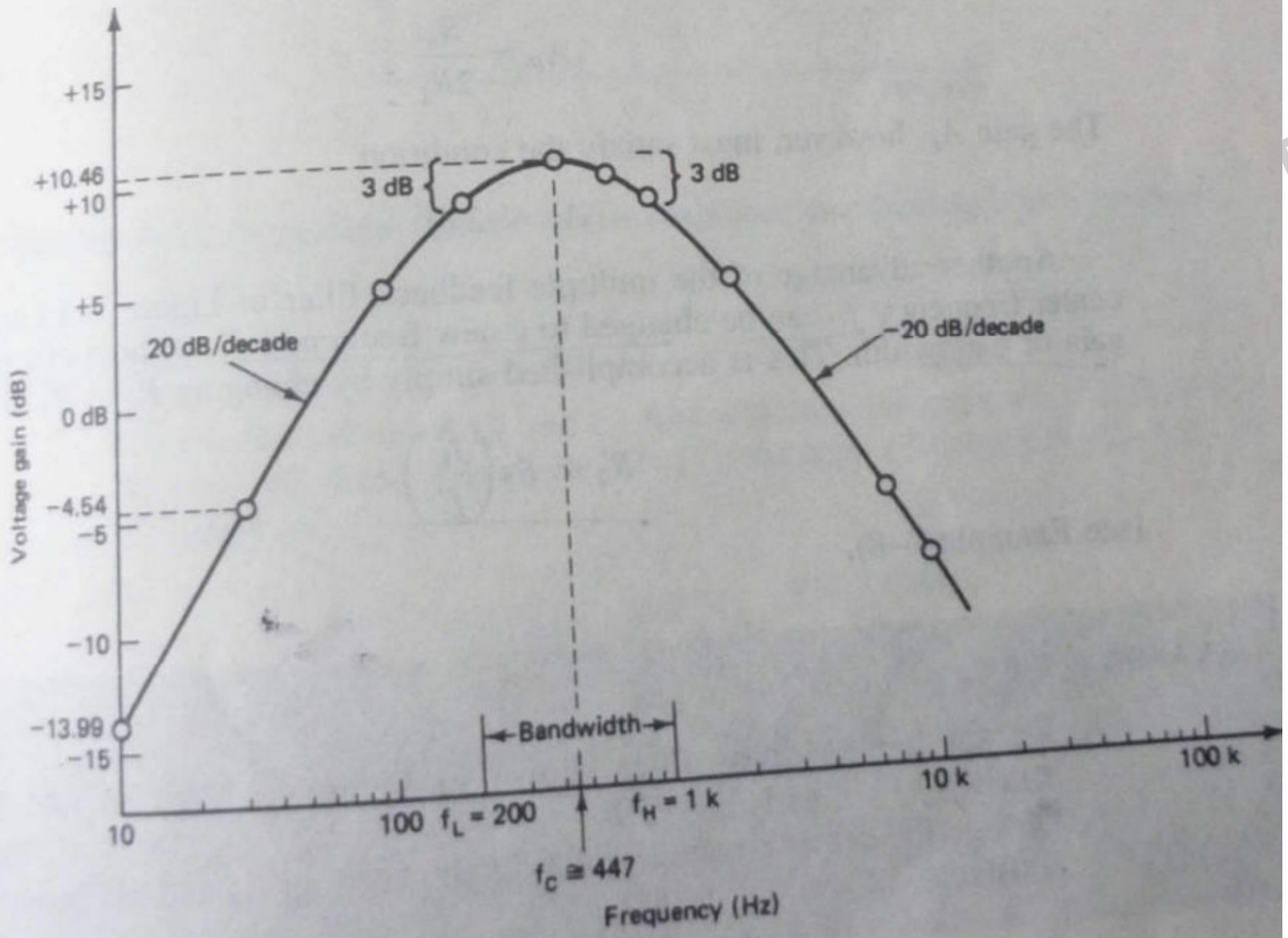

FIGURE 7-12 Frequency response for Example 7-7.

PREPARED
GCEK
ECE,

2nd order BPF (using single op amp)

PREPARED BY RINJU RAVINDRAN, ADHOC ASST. PROF. ECE, GCEK

2nd order BPF

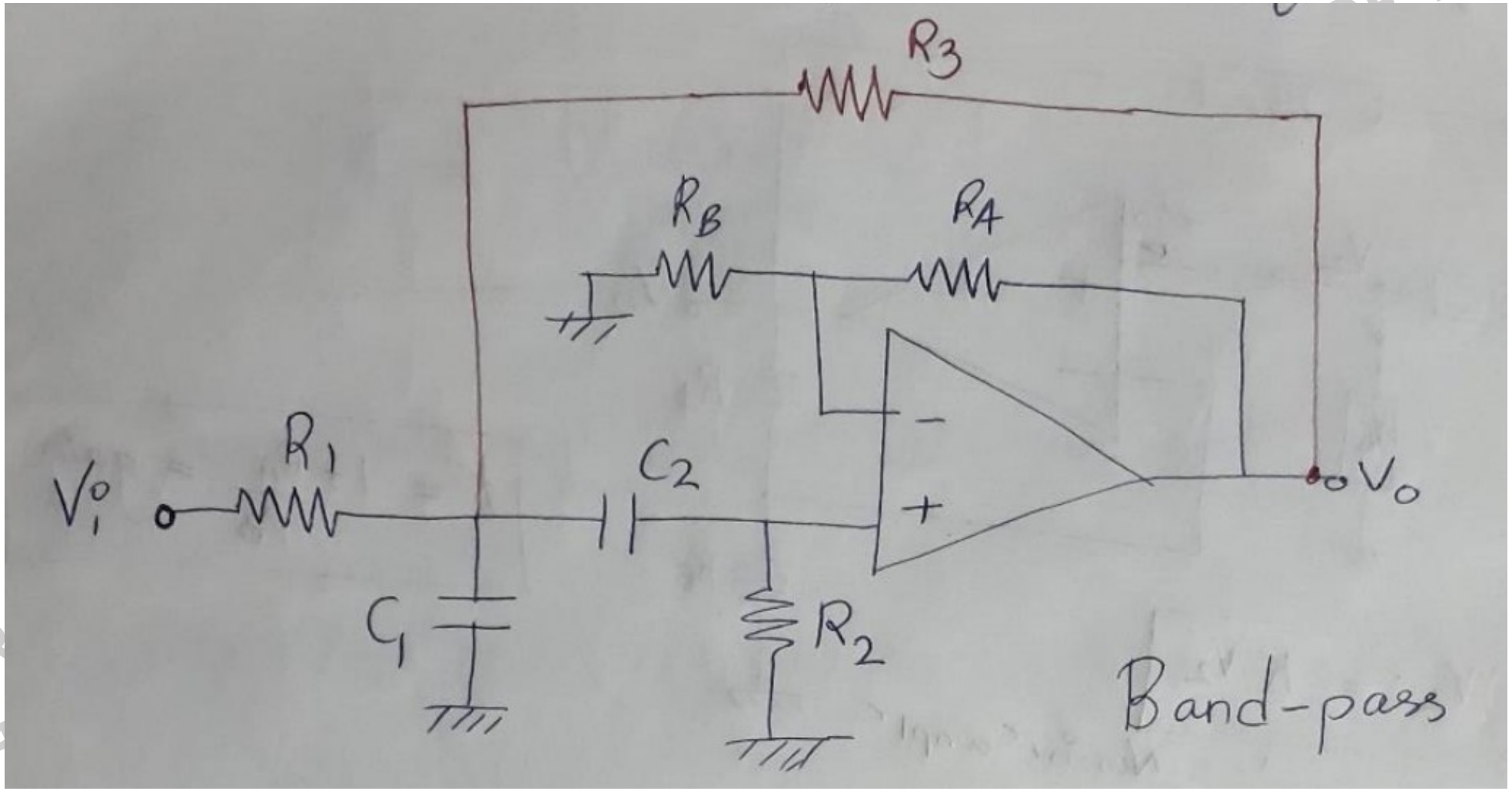

PR
G
ECE,

- Consist of an RC stage followed by CR stage to synthesis a BP block and a gain block to provide +ve f/b via R3.
- Frequency response of BPF with H_{OBP} = resonant gain or BP gain and ω_0 = resonance or peak freq.

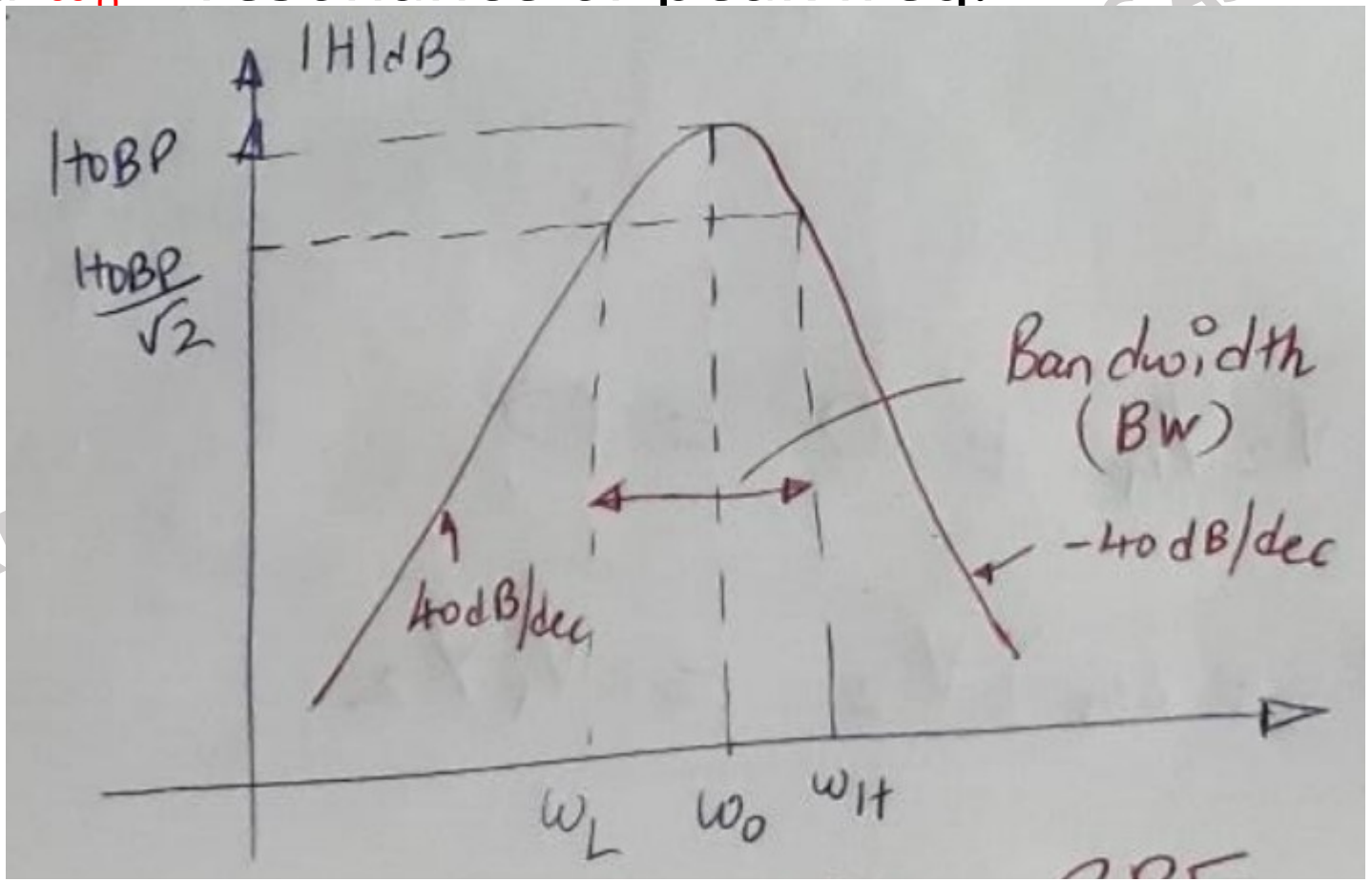

PREPARED BY ... ASST. PROF. ECE, GCEK

Derivation for f_0 and quality factor Q

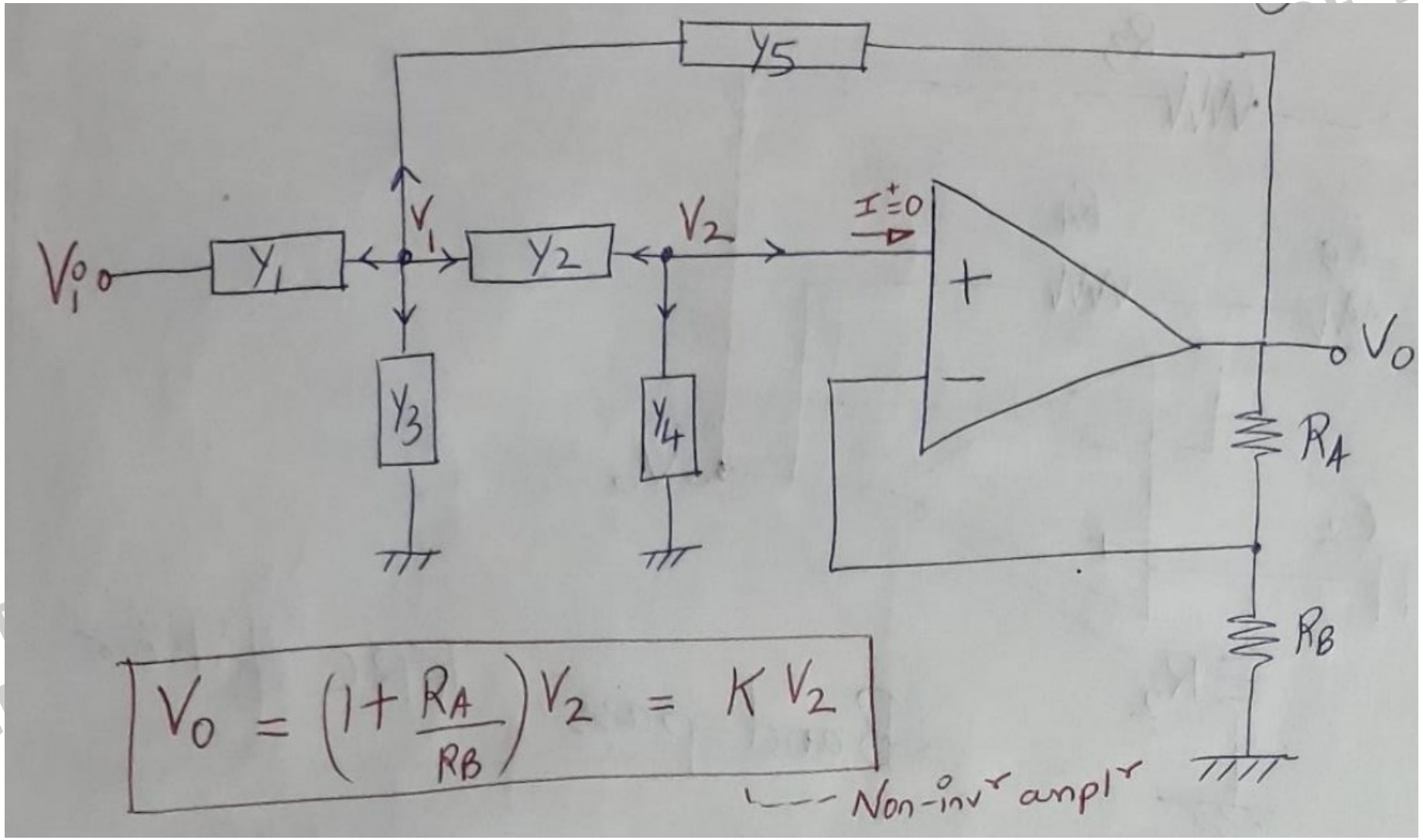

$$V_o = \left(1 + \frac{R_A}{R_B}\right) V_2 = K V_2$$

PREP
GCE
ECE,

KCL at V_1,

$$(V_1 - V_i)Y_1 + (V_1 - V_2)Y_2 + V_1 Y_3 + (V_1 - V_0)Y_5 = 0$$

$$(Y_1 + Y_2 + Y_3 + Y_5)V_1 - V_2 Y_2 - V_0 Y_5 = V_i Y_1$$

But $V_0 = K V_2$; $\boxed{V_2 = \frac{V_0}{K}}$

ie $(Y_1 + Y_2 + Y_3 + Y_5)V_1 - V_0\left(\frac{Y_2}{K} + Y_5\right) = V_i Y_1$ — (1)

KCL at V_2,

$$(V_2 - V_1)Y_2 + V_2 Y_4 + 0 = 0$$

ie $(Y_2 + Y_4)V_2 = V_1 Y_2$

PREPAR
GCEK

ECE,

$$Y_2 V_1 = (Y_2 + Y_4)\frac{V_0}{K}$$

$$\boxed{V_1 = \frac{(Y_2 + Y_4)}{K Y_2} V_0} \quad - (2)$$

Substitute eqn (2) in (1), we get

$$(Y_1 + Y_2 + Y_3 + Y_5)\frac{(Y_2 + Y_4)}{K Y_2} V_0 - V_0\left(\frac{Y_2}{K} + Y_5\right) = V_i Y_1$$

$$(Y_1 + Y_2 + Y_3 + Y_5)(Y_2 + Y_4) V_0 - (Y_2^2 + K Y_2 Y_5) V_0 = V_i Y_1 Y_2 K$$

$$\left[(Y_1 Y_2 + \cancel{Y_2^2} + Y_2 Y_3 + Y_2 Y_5) + (Y_1 + Y_2 + Y_3 + Y_5) Y_4 - \cancel{Y_2^2} - K Y_2 Y_5\right] V_0 = V_i Y_1 Y_2 K$$

ie $$\boxed{H(s) = \frac{V_0}{V_i} = \frac{K Y_1 Y_2}{Y_1 Y_2 + Y_2 Y_3 + Y_2 Y_5 + (Y_1 + Y_2 + Y_3 + Y_5) Y_4 + (1-K) Y_2 Y_5}} \quad - (3)$$

Now, for a BPF,

$$Y_1 = \frac{1}{R_1}, \quad Y_2 = sC_2, \quad Y_3 = sC_1, \quad Y_4 = \frac{1}{R_2}, \quad Y_5 = \frac{1}{R_3}$$

PREPARED BY ST. PROF. ECE, GCEK

If we consider equal-component design approach, Q4 (to simplify the math)

$\boxed{R_1 = R_2 = R_3 = R}$ and $\boxed{C_1 = C_2 = C}$

then, $Y_1 = Y_4 = Y_5 = \frac{1}{R}$; $Y_2 = Y_3 = sC$

$$H(s) = \frac{K\frac{sC}{R}}{\frac{sC}{R} + s^2C^2 + \left(\frac{1}{R} + sC + sC + \frac{1}{R}\right)\frac{1}{R} + (1-K)\frac{sC}{R}}$$

Multiply & divide by R^2;

$$H(s) = \frac{K\,sCR}{sCR + R^2C^2s^2 + \left(\frac{2}{R} + 2sC\right)R + (1-K)sCR}$$

$$H(s) = \frac{KsCR}{s^2R^2C^2 + (RC + 2RC + (1-K)RC)s + 2}$$

$$H(s) = K.\frac{sRC}{s^2(RC)^2 + sRC[4-K] + 2}$$

$$H(s) = \frac{K}{2}.\frac{sRC}{\frac{s^2R^2C^2}{2} + sRC\left(\frac{4-K}{2}\right) + 1}$$

Put $s = j\omega$

$$\boxed{H(j\omega) = \frac{\frac{K}{2}\,j\omega RC}{1 - \frac{\omega^2R^2C^2}{2} + j\omega RC\left(\frac{4-K}{2}\right)}} \quad -(4)$$

PREPARED BY ST. PROF. ECE, GCEK

Comparing with standard 2nd-order form of BPF, we have

$$\boxed{H(j\omega) = \frac{H_{0BP}\, j\left(\frac{\omega}{\omega_0 Q}\right)}{1 - \left(\frac{\omega}{\omega_0}\right)^2 + j\left(\frac{\omega}{\omega_0 Q}\right)}} \quad \text{— (5)}$$

→ Comparing (4) and (5), we have

i) $\frac{1}{\omega_0^2} = \frac{R^2C^2}{2}$

$$\omega_0^2 = \frac{2}{(RC)^2}$$

$$\boxed{\omega_0 = \frac{\sqrt{2}}{RC}}$$

ie $\boxed{f_0 = \frac{\sqrt{2}}{2\pi RC}}$ → Resonant or Center frequency of BPF

PREPARED BY PROF. ECE, GCEK

ii) $$\frac{1}{\omega_0 Q} = RC\left(\frac{4-K}{2}\right)$$

$$\omega_0 \cdot Q = \frac{2}{RC(4-K)}$$

ie $$Q = \frac{2}{RC(4-K)\omega_0} = \frac{2}{\cancel{RC}(4-K)\frac{\sqrt{2}}{\cancel{RC}}}$$

$$\boxed{Q = \frac{\sqrt{2}}{4-K}}$$ ---→ Quality factor of a BPF.

iii) $$\frac{H_{0BP}}{\omega_0 Q} = \frac{K}{2} RC$$

$$H_{0BP} = \frac{K}{2} RC\, \omega_0 Q$$

$$= \frac{K}{2} \cancel{RC} \frac{\cancel{\sqrt{2}}}{\cancel{RC}} \frac{\cancel{\sqrt{2}}}{4-K}$$

$$\boxed{H_{0BP} = \frac{K}{4-K}}$$ ---→ Pass-band gain or Resonance gain of BPF.

PREPARED BY ASST. PROF. ECE, GCEK

K = op amp gain $= A_F$

$H_{oBP} = A_{FT}$ total pass band gain of BPF.

PREPARED BY RINJU RAVINDRAN, ADHOC ASST. PROF. ECE, GCEK

For a BPF,

$$\boxed{Q = \frac{\omega_0}{BW}} \quad \text{or} \quad \boxed{Q = \frac{f_0}{BW}}$$

$BW = \omega_H - \omega_L$ $\qquad$ $BW = f_H - f_L$

BW → bandwidth of BPF

Design:

Design a 2nd-order band-pass filter with cut-off frequency of 1KHz and bandwidth of 100Hz. Also, find its resonance gain?

Solution:-

We adopt equal-component design approach,

ie $R_1 = R_2 = R_3 = R$ and $C_1 = C_2 = C$

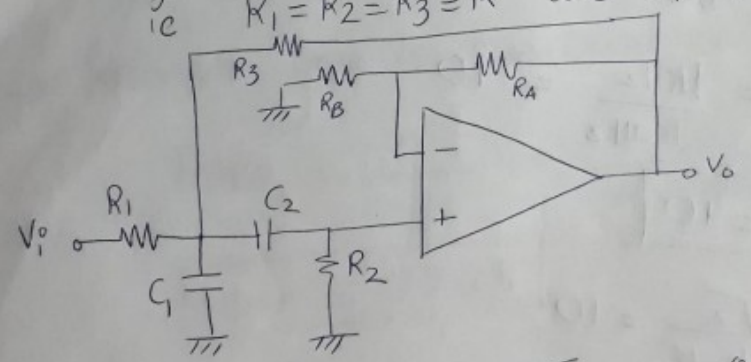

$$H_{0BP} = \frac{K}{4-K}, \quad \omega_0 = \frac{\sqrt{2}}{RC}, \quad Q = \frac{\sqrt{2}}{4-K}$$

PREPARED BY ST. PROF. ECE, GCEK

For a BPF,

$$f_0 = \frac{\sqrt{2}}{2\pi RC} = 1KHz$$

let $\boxed{C = 10nF}$ ie $\boxed{C_1 = C_2 = 10nF}$

$$\text{ie } R = \frac{\sqrt{2}}{2\pi f_0 C}$$

$$= \frac{\sqrt{2}}{2\pi \times 1KHz \times 10nF}$$

$$R = 22.5K\Omega$$

Select $\boxed{R = 24K\Omega \text{ (std)}}$

Now, $Q = \frac{f_0}{BW}$; $BW = 100Hz$

$$Q = \frac{1KHz}{100Hz} = 10$$

$$\boxed{Q = 10}$$

$$\rightarrow Q = \frac{\sqrt{2}}{4-K} = 10$$

$$\hookrightarrow 4-K = \frac{\sqrt{2}}{Q} \Rightarrow K = 4 - \frac{\sqrt{2}}{Q} = 4 - \frac{\sqrt{2}}{10}$$

PREPARED BY R
GCEK
SST. PROF. ECE,

ie $K = 4 - \frac{\sqrt{2}}{10} = \underline{3.858}$

Now, $K = 1 + \frac{R_A}{R_B} = 3.858$

ie $\frac{R_A}{R_B} = 2.858$

$R_A = 2.858 R_B$

let $R_B = 10K\Omega$

$\therefore R_A = 28.58K\Omega$

Select $\boxed{\begin{array}{l} R_A = 10K\Omega \\ R_B = 27K\Omega \text{ (std)} \end{array}}$

→ Resonance gain or Pass band gain is

$H_{OBP} = \frac{K}{4-K} = \frac{3.858}{4-3.858}$

$\boxed{H_{OBP} = 27.28}$

PREPARED BY R ASST. PROF. ECE, GCEK

Designed circuit is

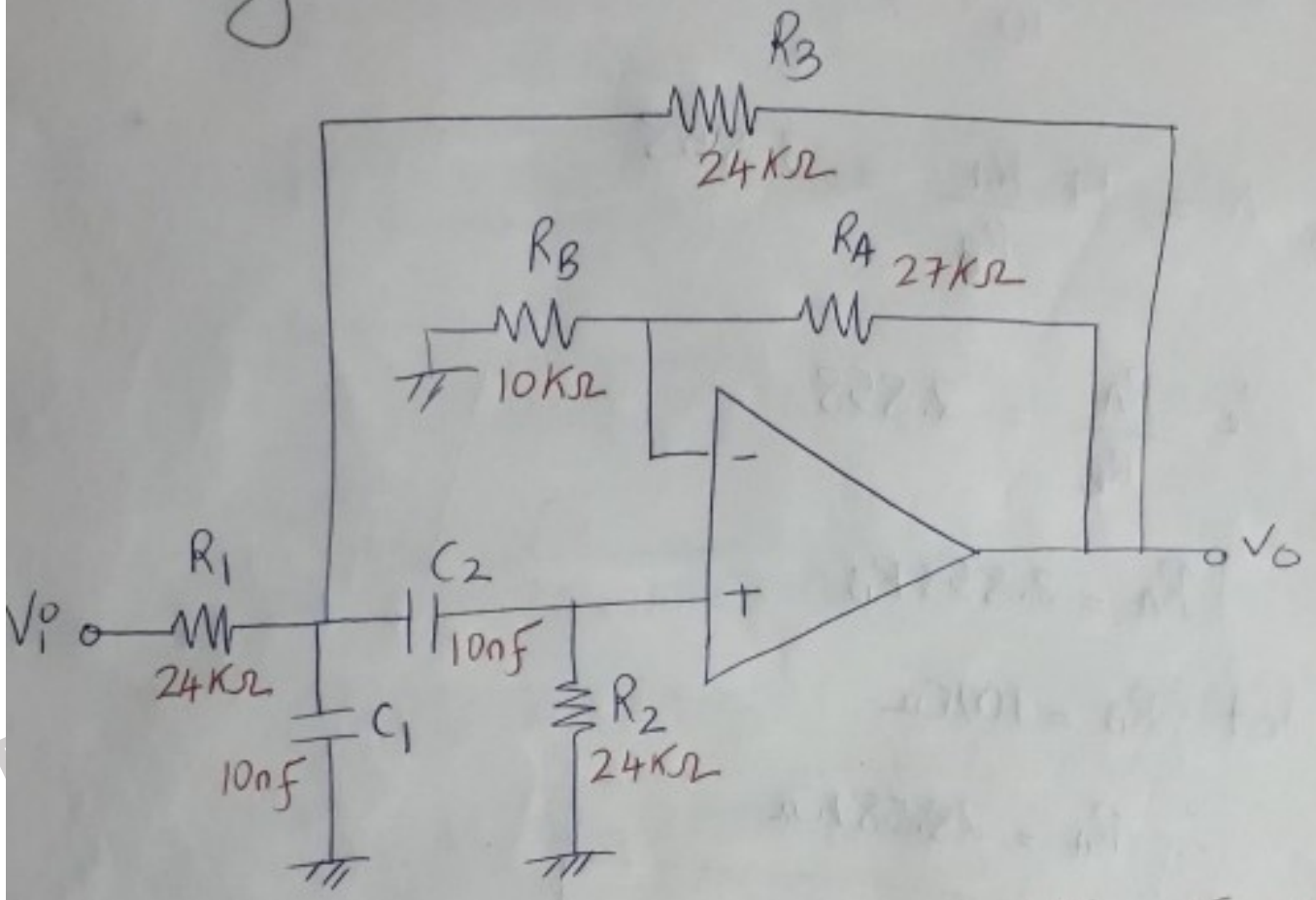

2nd order KRC BPF for $f_0 = 1KHz$ and BW = 100Hz.

PREPARED BY ECE, GCEK

Narrow Band Pass Filter

PREPARED BY RINJU RAVINDRAN ADHOC ASST. PROF. ECE, GCEK

Narrow Band Pass Filter

- The narrow Band Pass Filter Circuit using multiple feedback is shov

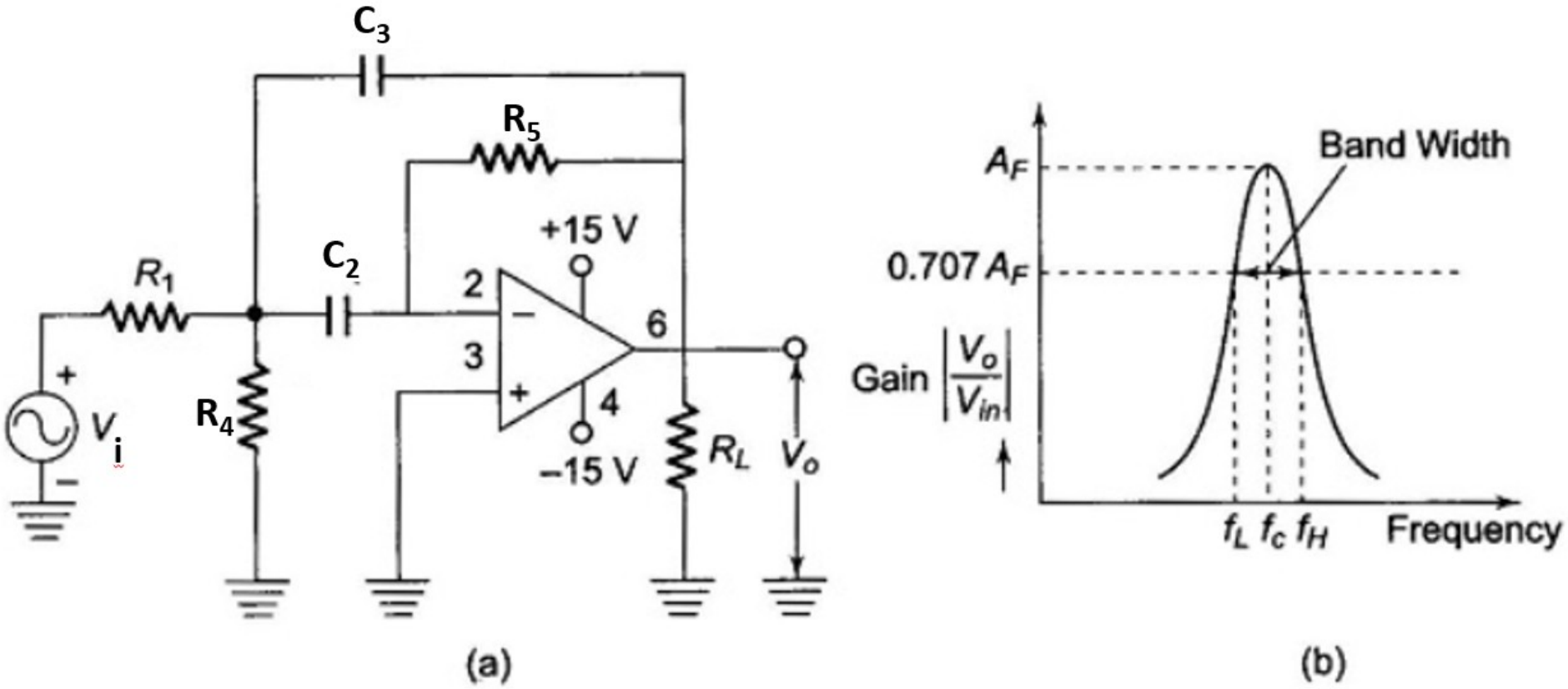

Fig. 15.17 (a) Narrow Band Pass Filter Using Multiple Feedback
(b) Frequency Response of a Narrow Band Pass Filter

PREPAR
GCEK

- Filter uses only one opamp.

- This filter is unique in the following respects.

1. It has **two feedback paths**, which is why it is called a multiple feedback
2. The **opamp is used in the inverting mode.**

- Generally a narrow band pass filter is designed for specific values of centre frequency f_c and Q, or f_c and band width.

PREPARED BY RINJU RAVINDRAN, AD HOC ASST. PROF. ECE, GCERK

Design

- To simplify the design calculations, choose $C_2 = C_3 = C$

$R_1 =$

$R_4 =$

$R_5 =$

PREPARED BY RINJU RAVINDRAN, ADHOC ASST. PROF. ECE, GCEK

- Where A_F is the gain at f_c given by

$$A_F =$$

- Gain A_F however must satisfy the condition

$$A_F < 2Q^2$$

- Another advantage of multiple feedback filter is that its centre freq f_c can be changed to a new freq f_c' w/o changing the gain or BW.
- Achieved simply by changing R_4 to R_4' so that

$$R_4' = R_4 \quad ^2$$

PREPARED BY RAHUL RAVINDRAN ADHOC ASST. PROF. ECE, GCEK

NUMERICALS

1. a) Design a band pass filter with f_c =1 KHz, Q=3 and A_F = 10.

   b) Change the centre freq to 1.5KHz keeping A_F and BW constant.

PREPARED BY RINJU RAVINDRAN, ADHOC ASST. PROF. ECE, GCEK

- Choose values of C1 and C2 first and then find R1, R2 and R3.
- Let C1 = C2 = C = 0.01 μF
- R1 = 4.77 K ---------use 4.7 K
- R4 = 5.97 K ---------use 6.2 K
- R5 = 95.5 K --------use 100 K

- R4’ =2.65 K ---------use 2.7 K

PREPARED BY RINJU RAVINDRAN, ADHOC ASST. PROF. ECE GCEK

Narrow Band Pass Filter- Derivation

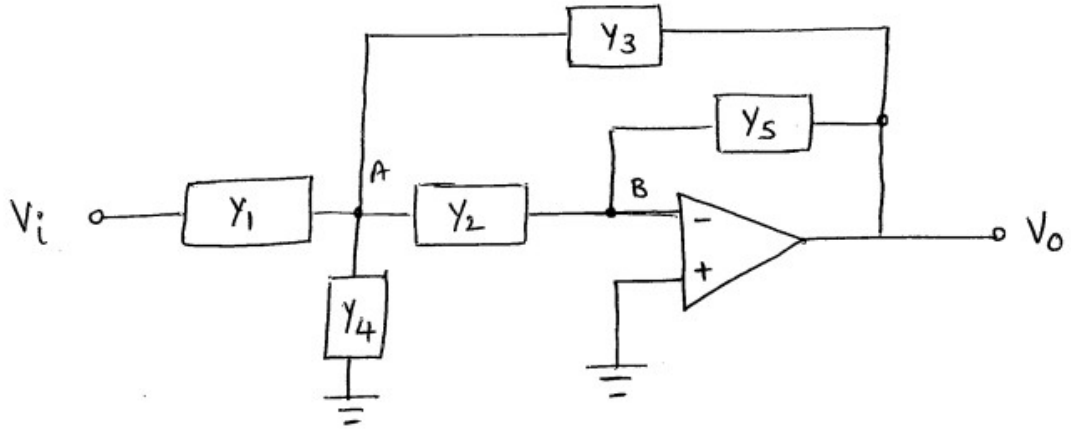

Fig: Band pass Configuration

writing KCL at node 'A' $[V_B = 0]$

$$(V_i - V_A)Y_1 = (V_A - 0)Y_2 + (V_A - V_o)Y_3 + V_A Y_4$$

$$V_i Y_1 + V_o Y_3 = V_A (Y_1 + Y_2 + Y_3 + Y_4) \longrightarrow (1)$$

writing KCL at node 'B'

$$(V_A - 0)Y_2 = (0 - V_o)Y_5$$

$$V_A = \frac{-V_o Y_5}{Y_2} \longrightarrow (2)$$

PREPARED BY PROF. ECE, GCEK

Substituting ② in ①

$$V_i Y_1 + V_o Y_3 = \frac{-V_o Y_5}{Y_2}\left(Y_1 + Y_2 + Y_3 + Y_4\right)$$

$$V_i Y_1 = \frac{-V_o Y_5}{Y_2}\left(Y_1 + Y_2 + Y_3 + Y_4\right) - V_o Y_3$$

$$V_i Y_1 = V_o \left[\frac{-Y_5}{Y_2}\left(Y_1 + Y_2 + Y_3 + Y_4\right) - Y_3 \right]$$

$$\frac{V_o}{V_i} = \frac{-Y_1 Y_2}{Y_5\left(Y_1 + Y_2 + Y_3 + Y_4\right) + Y_2 Y_3} \longrightarrow ②$$

Consider the circuit of Narrow Band pass filter

PREPARE
GCEK

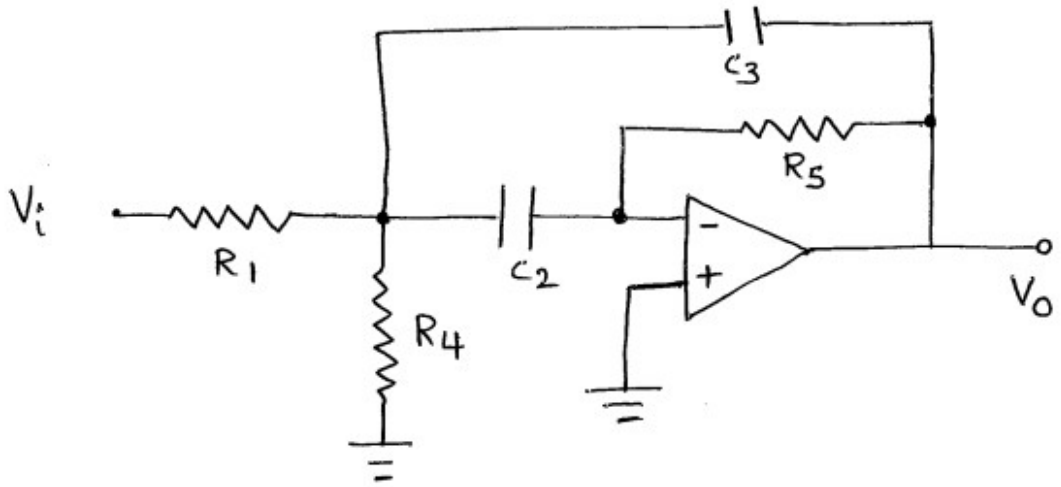

Fig : second order Narrow Band pass filter.

on comparing the above circuit with ~~the~~ Band pass configuration, put

$Y_1 = G_1$, $Y_2 = sC_2$, $Y_3 = sC_3$, $Y_4 = G_4$ and $Y_5 = G_5$

Then the transfer function becomes

$$H(s) = \frac{V_o(s)}{V_i(s)} = \frac{-sG_1C_2}{s^2C_2C_3 + s(C_2+C_3)G_5 + G_5(G_1+G_4)} \longrightarrow (3)$$

(or)

PREPA
GCEK

. ECE,

(or)

$$H(s) = \frac{-G_1}{sC_3 + G_5\dfrac{C_2+C_3}{C_2} + \dfrac{(G_1+G_4)G_5}{sC_2}} \longrightarrow (4)$$

The transfer function of above equation is equivalent to the gain expression of a parallel RLC circuit shown in figure below driven by a current source $G'V_i$

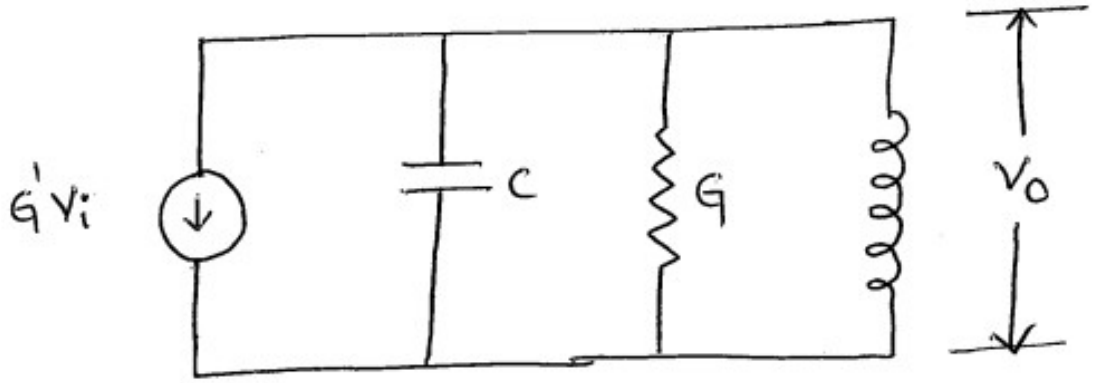

Fig: A parallel RLC circuit.

the gain expression is

$$\frac{V_o(s)}{V_i(s)} = -\frac{G'}{Y} = -\frac{G'}{sC + G + \frac{1}{sL}} \longrightarrow (5)$$

comparing Eq (4) and (5)

$$G' = G_1 \longrightarrow (6)$$

$$L = \frac{C_2}{G_5 (G_1 + G_4)} \longrightarrow (7)$$

$$G = \frac{G_5 (C_2 + C_3)}{C_2} \longrightarrow (8)$$

$$C = C_3 . \longrightarrow (9)$$

At resonance the parallel RLC circuit has a unity power factor ie imaginary part is zero which gives the resonant frequency ω_0 as

PREPA
GCEK
ECE,

$$\omega_0^2 = \frac{1}{LC} = \frac{G_5(G_1 + G_4)}{C_2 C_3} \longrightarrow (10)$$

The gain at resonance is

$$\left.\frac{V_o}{V_i}\right|_{\omega=\omega_0} = -\frac{G'}{G} = -\frac{G_1}{G} = -\frac{\left(\frac{G_1}{G_5}\right) C_2}{C_2 + C_3} \longrightarrow (11)$$

$$\left.\frac{V_o}{V_i}\right|_{\omega=\omega_0} = \frac{-\left(\frac{R_5}{R_1}\right) C_2}{C_2 + C_3} \longrightarrow (12)$$

The Q-factor at resonance is

$$Q_0 = \frac{\omega_0 L}{R} = \omega_0 RC = \frac{\omega_0 C}{G} = \frac{\omega_0 C_2 C_3}{(C_2 + C_3) G_5} \longrightarrow (13)$$

The Bandwidth BW is given by

$$BW = f_h - f_L = \frac{f_0}{Q_0} = \frac{\omega_0}{2\pi Q_0} = \frac{\omega_0}{2\pi R \omega_0 C}$$

$$BW = \frac{1}{2\pi R C} = \frac{G}{2\pi C} = \frac{G_5 (C_2 + C_3)}{2\pi C_2 C_3} \longrightarrow (14)$$

and the centre freq $f_0 = \sqrt{f_h f_L}$

Now for $C_2 = C_3 = C$, the gain at resonance freq from Eq (12) is

$$\left.\frac{V_0}{V_i}\right|_{\omega=\omega_0} = -\frac{R_5}{2R_1} = -A_F \longrightarrow (15)$$

$$\omega_0 = \frac{\sqrt{G_5 (G_1 + G_4)}}{C} \longrightarrow (16)$$

$$BW = \frac{G_5}{\pi C} = \frac{1}{\pi R_5 C} \longrightarrow (17)$$

using Eq's (13), (15), (16) the standard transfer function of a bandpass filter is obtain as

$$H(s) = \frac{-A_F\left(\frac{\omega_0}{Q}\right)s}{s^2+\left(\frac{\omega_0}{Q}\right)s+\omega_0^2} = \frac{-A_F\,\alpha\,\omega_0\,s}{s^2+\alpha\,\omega_0\,s+\omega_0^2} \rightarrow (18)$$

$$20\log|H(s)| = 20\log\left|\frac{A_F\,\alpha\,\omega_0\,s}{s^2+\alpha\,\omega_0\,s+\omega_0^2}\right| \longrightarrow (19)$$
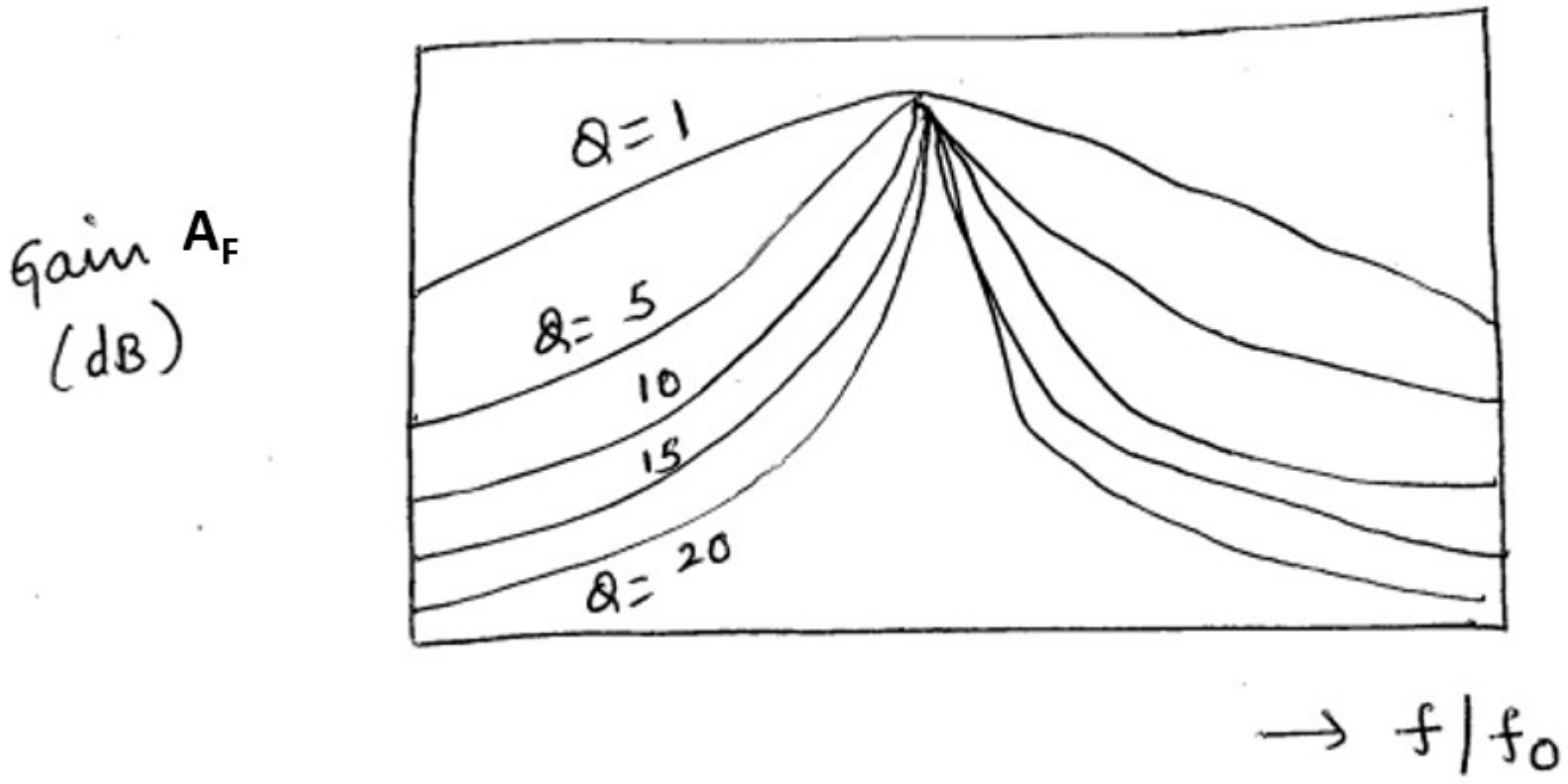
Single op-Amp band pass filter response is given by