OPAMP APPLICATIONS

PREPARED BY RINJU RAVINDRAN, ADHOC ASST. PROF.
ECE, GCEK

- Op amp has countless applications and forms the basic building block of linear and non linear analog systems.

- Linear applications: adder, subtractor, V to I converter, I to V converter, instrumentation ampr, etc
- Non linear applications: rectifier, log & antilog ampr, multiplier, clipper, clamper, etc.

PREPARED BY RINJU RAVINDRAN, ADHOC ASST. PROF.
ECE, GCEK

1.Basic op amp applications

a. Scale changer/inverte

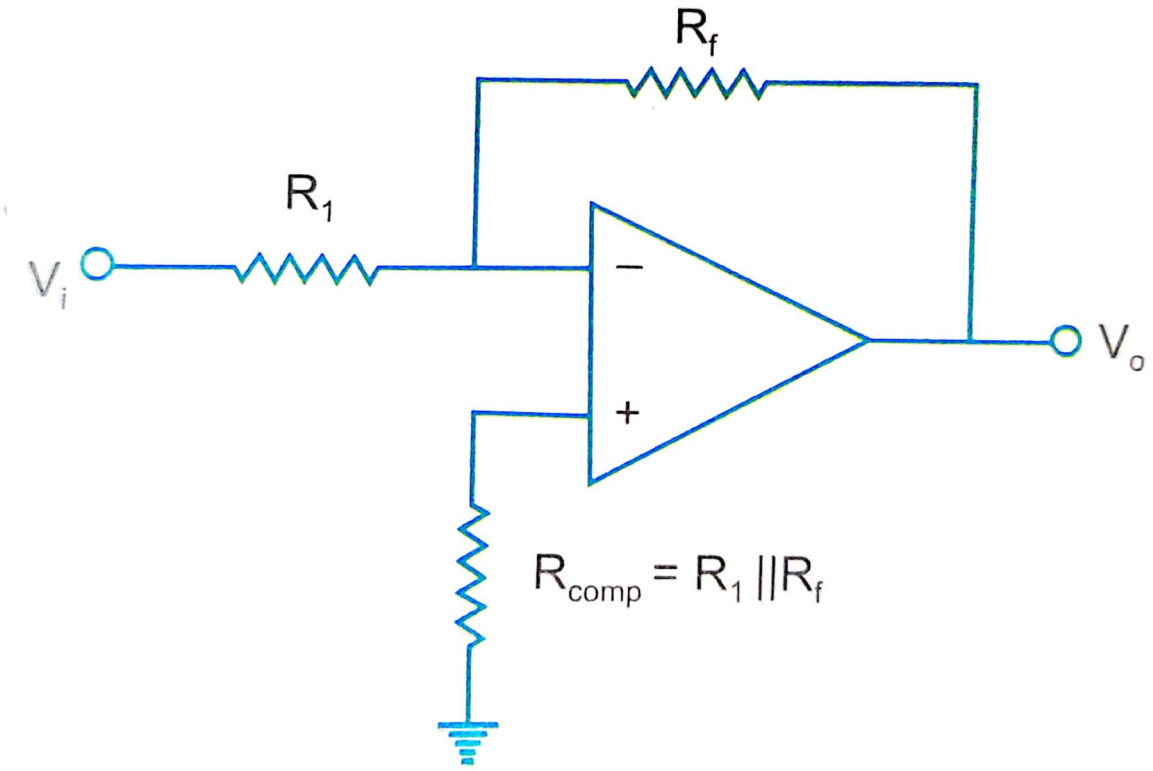

PREPARED BY RINJU
OC ASST. PROF.

- R_{comp} is the compensation resistor used to compensate the effect of bias currents.
- It is added btw non inverting input terminal & grnd.
- To compensate bias current, R_{comp} should be

$$R_{comp} = R_1 \,||\, R_f$$

- In the basic inverting ampr, if ratio R_f/R_1=K, where k is a real constant,

Then CL gain A_{CL} = -K.

The ckt thus could be used to multiply by a constant factor if R_f and R_1 are selected as precision resistors.

For R_f=R_1, A_{CL} =-1 . This ckt is called an inverter.

That is, o/p is 180 deg out of phase wrto i/p, though the magnitudes are same.

PREPARED BY RINJU RAVINDRAN, ADHOC ASST. PROF.
ECE, GCEK

b. Summing amplifier (summer)

- Op amp may be used to design a ckt whose o/p is the sum of several i/p s/gs.
- 2 types : inverting summer & non inverting summer.

INVERTING SUMMER

- 3 input voltages V_1, V_2 & V_3
- 3 input res R_1, R_2, R_3
- Feedback res R_f

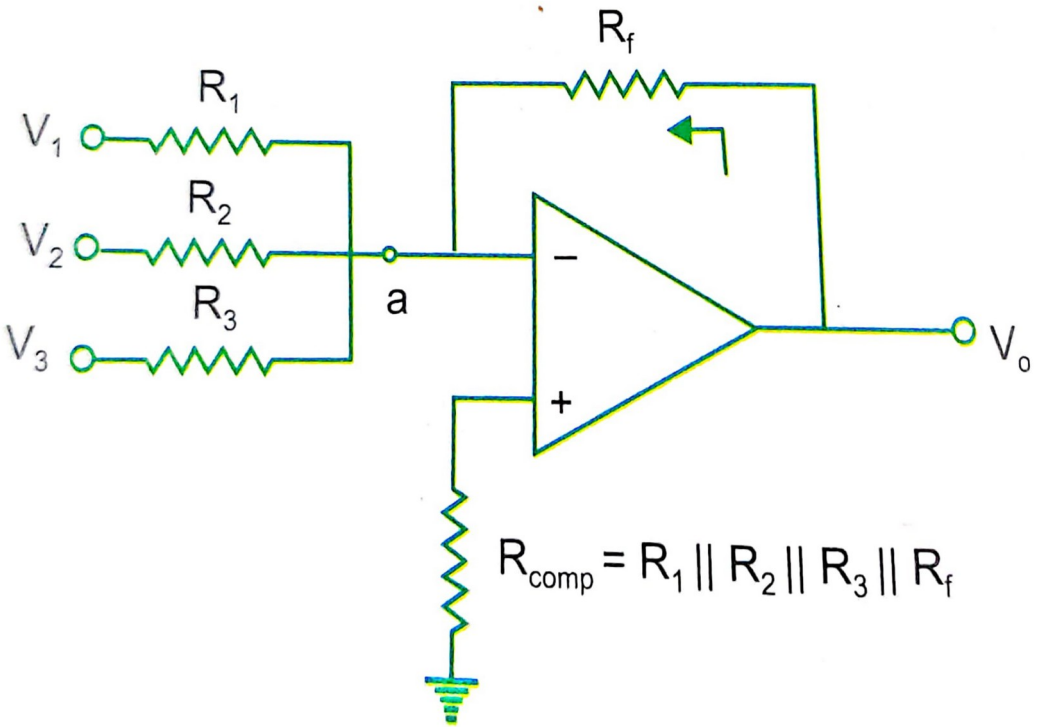

- Analysis is carried out assuming op amp is ideal.
- ie, $A_{OL} = R_i = .$

PREPARED BY RINJU RAVINDR
ECE, G
OC ASST. PROF.

- Since input bias current is assumed to be 0, there is no V drop across R_{comp} . So non inv i/p terminal is at grnd potential.
- V at node a =0 (virtual grnd concept).
- KCL at a is

  = 0

V_o = -] ----------(18)

- Thus o/p is an inverted, weighted sum of the inputs.
- In special cases when $R_1 = R_2 = R_3 = R_f$, we have

$V_o = -V_1+V_2+V_3$] ---------- (19)

PREPARED BY RINJU RAVINDRAN, ADHOC ASST. PROF.
ECE, GCEK

- Here o/p is the inverted sum of i/p s/gs.
- if we set $R_1 = R_2 = R_3 = 3R_f$, then

  V_o= -[----------(20)

- Here o/p is the avg of i/p s/gs (inverted).
- In **<u>practical ckts</u>**, i/p bias current compensating res should be provided. To find R_{comp} , make all i/ps $V_1=V_2=V_3=0$.
- So eff i/p res $R_i = R_1 \,||\, R_2 \,||\, R_3$
- $R_{comp} = R_i \,||\, R_f$
- ie, $R_{comp} = R_1 \,||\, R_2 \,||\, R_3 \,||\, R_f$

PREPARED BY RINJU RAVINDRAN, ADHOC ASST. PROF. ECE, GCEK

NON INVERTING SUMMER

- Summer that gives a non inverted sum.
- V at inv i/p terminal = V_a
- Then V at + terminal will also be V_a.
- At a,

  =0

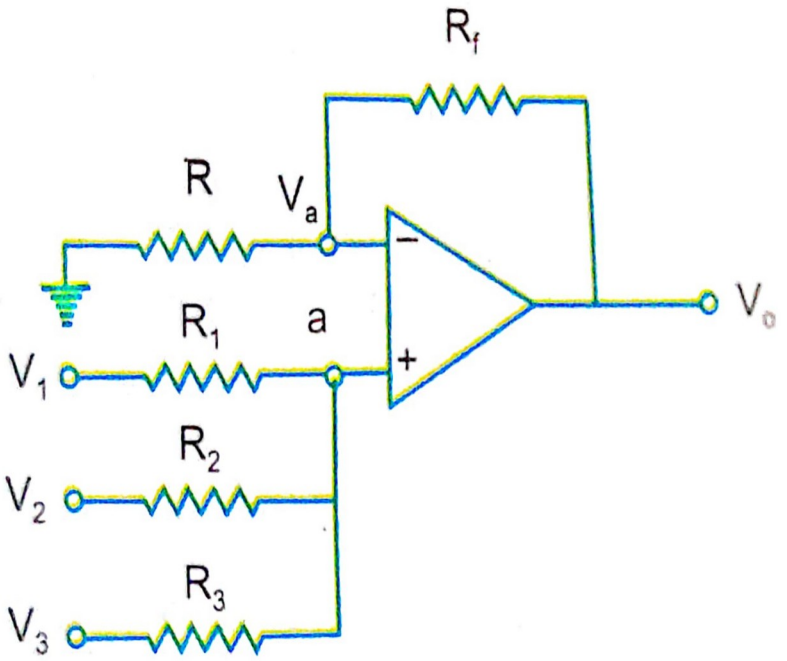

V_a =

Op amp & 2 res R_f & R constitute a non inv ampr with

V_o = [1+] V_a

PREPARED BY RINJU RAVINDRAN, A
ECE, GCEK

- $V_o = [1+\ \ ]$

This is a non inverted weighted sum of inputs.

Let $R_1 = R_2 = R_3 = R =$

Then $V_o = V_1 + V_2 + V_3$

PREPARED BY RINJU RAVINDRAN, ADHOC ASST. PROF.
ECE, GCEK

c. Subtractor

- A basic differential ampr can be used as a subtractor as shown in fig.
- If all res are equal in value, then o/p V can be derived using superposition principle.
- To find o/p V_{o1} due to V_1 alone, make V_2=0.
- Now ckt is a non inv ampr having i/p Voltage $V_1/2$ at + terminal . O/p
- V_{o1}=] = V_1
- o/p V_{o2} due to V_2 alone (with V_1 grnded) --- inv ampr.
- V_{o2} = -V_2
- Output V_o due to both inputs V_o= V_{o1}+ V_{o2}
- **V_o=V_1-V_2.**

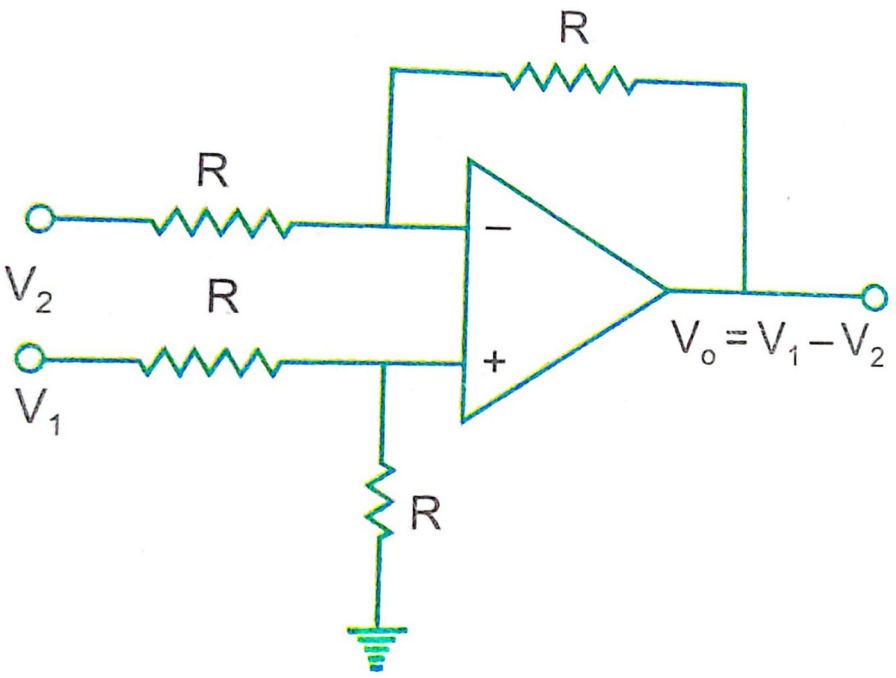

PREPARED BY RINJU RAVINDRAN
ECE, GCEK

d. Adder-Subtractor

- We can perform addition & subtraction simultaneously with a single op amp using this ckt.

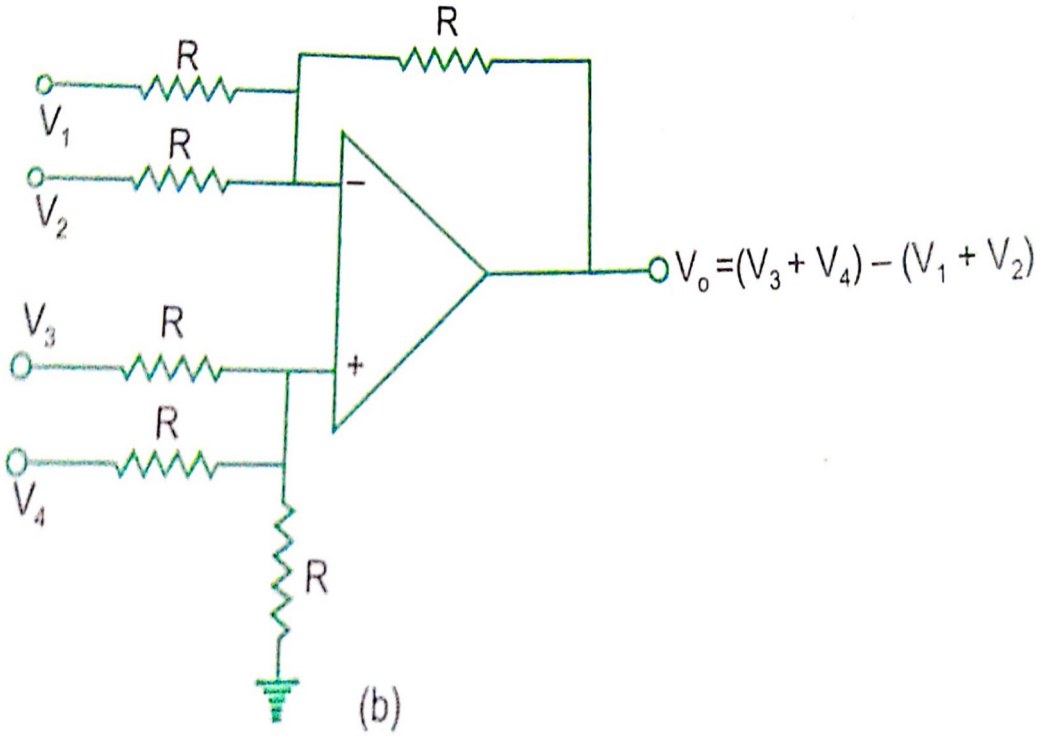

- V_o by <u>superposition thrm</u>.
- To find V_{o1} due to V_1 alone, make all other i/p voltages V_2, V_3 and V_4 =0.
- Ckt now becomes inv ampr.

PREPARED BY RINJU RAVINDR
ECE, G
OF.

- By Thevenin's eqvt ckt at inv i/p terminal,

$V_{o1} = \ = - V_1$

- Similarly $V_{o2} = -V_2$
- Now V_{o3} due to V_3 alone by setting V_1, V_2 and V_4 =0.
- Ckt now becomes non inv ampr.

PREPAR
AVINDRAN, ADHOC ASST. PROF.
CEK

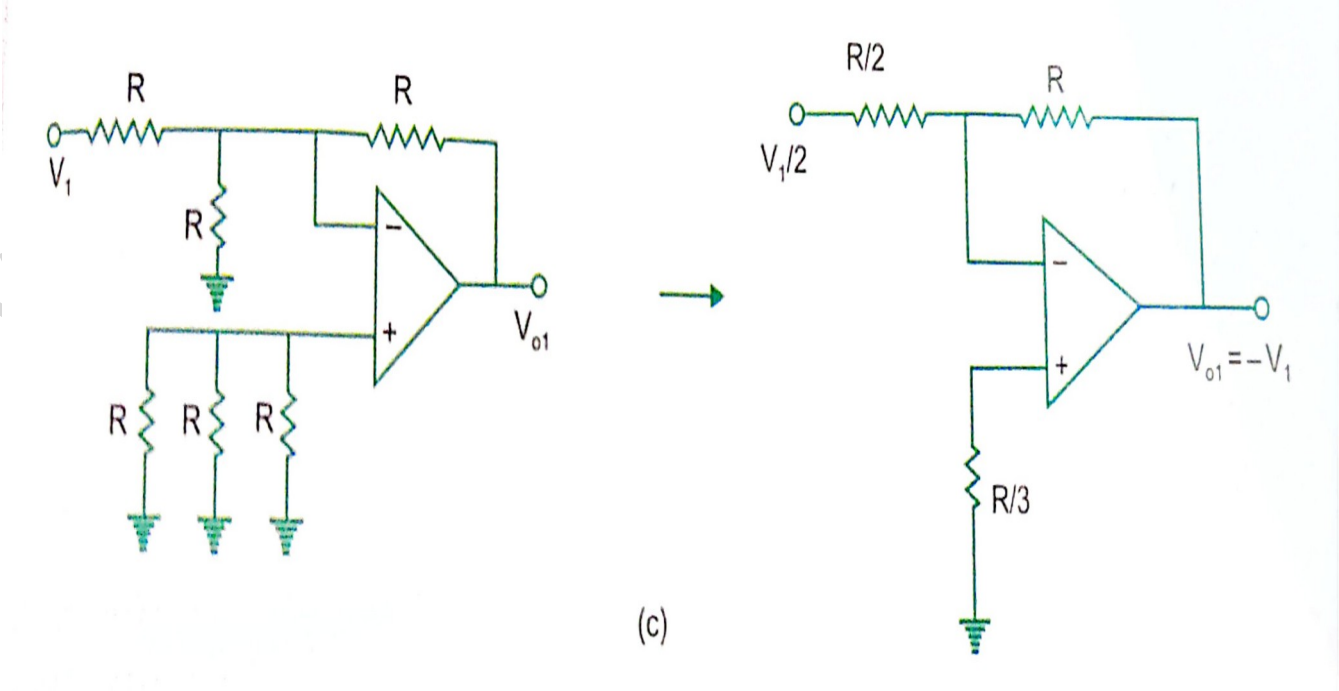

- $V_a = V_3 = V_3/3$
- $V_{o3} = [1+\ \ ]V_a = 3[V_3/3] = V_3$

- Similarly $V_{o4} = V_4$

- V_o due to all 4 i/ps

$$V_o = V_{o1} + V_{o2} + V_{o3} + V_{o4}$$
$$= -V_1 - V_2 + V_3 + V_4$$

$$\mathbf{V_o = (V_3 + V_4) - (V_1 + V_2)}$$

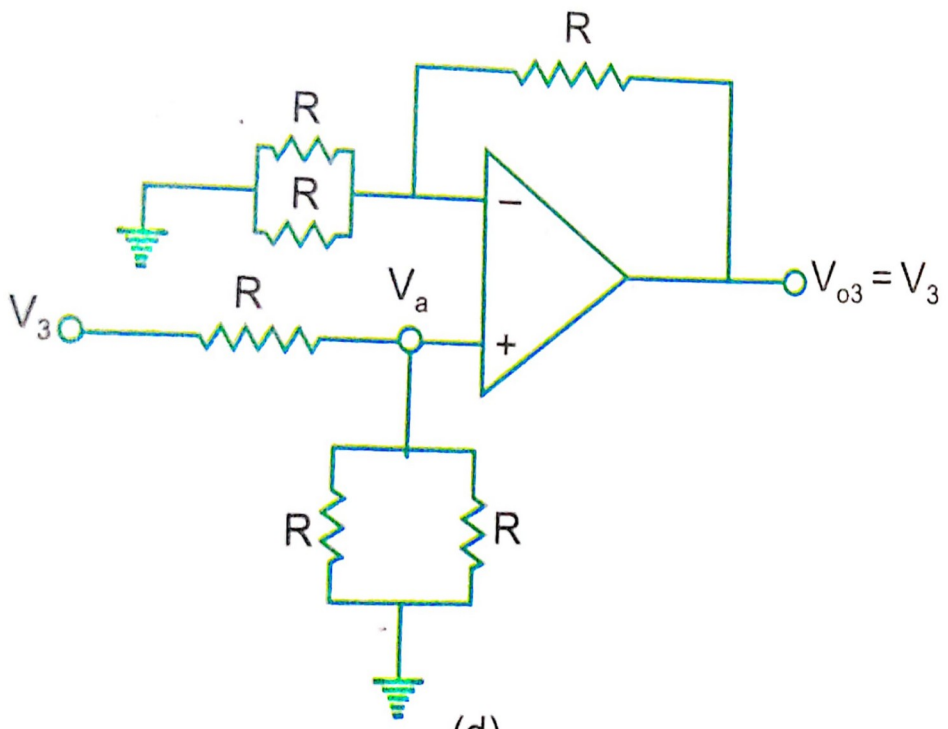

(d)

PREPARED BY RINJU RAVI ASST. PROF. ECE

2.Differential Amplifier

- Ckt that amplifies diff btw 2 s/gs.
- Since ideal case, differential voltages at i/p terminals of op amp is 0, nodes a & b are at same potential(say V_3).
- Nodal eqn at 'a'

= 0

[] V_3 – = -----(1)

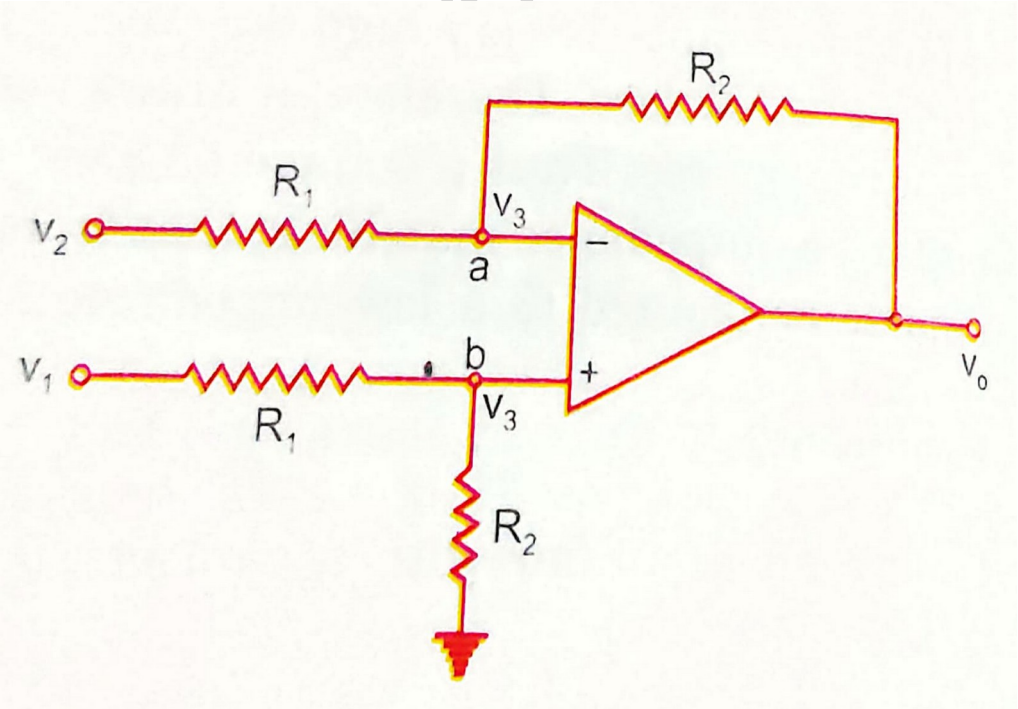

PREPARED BY RINJU RAVINDRA ASST. PROF.
ECE, GC

At ‘b’

= 0

[] V_3 - = 0 -----(2)

eqn (1)- eqn(2)

$(V_1 - V_2) =$

$= (V_1 - V_2)$

- Ckt useful in detecting very small differences in s/gs, since the gain can be chosen to be very large.

- For eg: if $R_2 = 100R_1$, then a small diff $(V_1 - V_2)$ is amplified 100 times.

PREPARED BY RINJU RAVINDRAN, ADHOC ASST. PROF. ECE, GCEK

3.Instrumentation amplifier

- We need to measure & control physical quantities(industrial & consumer applications).
- Eg: measurement & control of temp, humidity, light intensity, water flow, etc.
- These physical quantities are usually measured with the help of transducers.
- o/p of transducer has to be amplified so that it can drive the indicator or display s/m.
- This function is performed by an instrumentation ampr.

PREPARED BY RINJU RAVINDRAN, ADHOC ASST. PROF. ECE, GCEK

Imp features of instrumentation ampr

i. High gain accuracy
ii. High CMRR
iii. High gain stability with low temp coefficient
iv. Low dc offset
v. Low o/p impedance

Op amp μA725 are specially designed op amp to meet above requirements of a good instr^{n} ampr.

Monolithic (single chip) instr^{n} ampr :

- AD521, AD524, AD620,AD624 by Analog devices.
- LM363.XX (XXby National Semicondr
- INA101,104,3626, 3629 by Burr-Brown.

PREPARED BY PINJU RAVINDRAN, ADHOC ASST. PROF.
ECE, GCEK

a. Basic differential ampr : Fig(a)

$V_0 = - \ V_2 + \ V_1 [\ 1+ \ ]$

$V_0 = - \ \{ V_2 - \ V_1 [\ \ +1] \}$

For = , we get

$V_0 = \ (V_1 - V_2)$

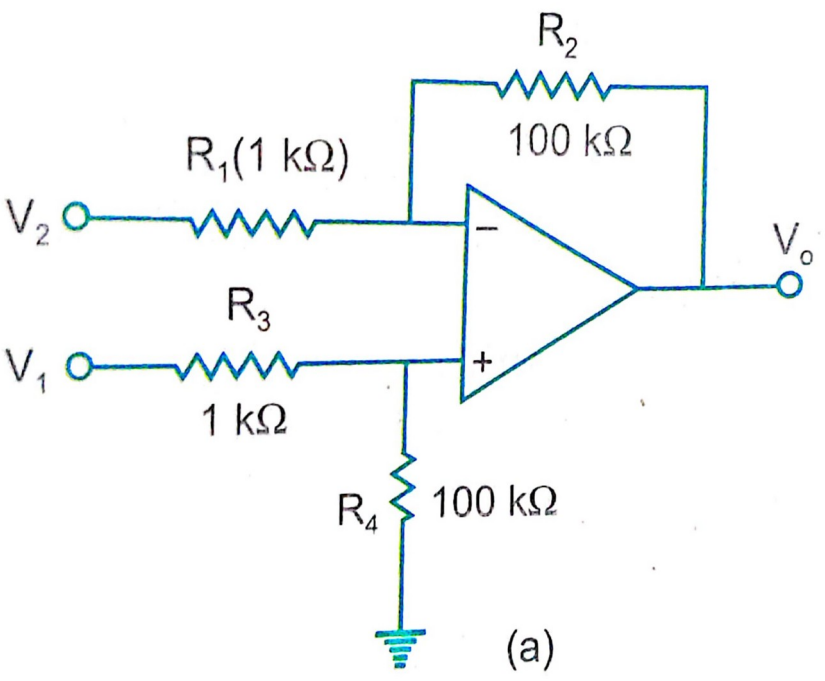

From the fig, source V_1 sees an i/p impedance= R_3 + R_4 (101 Kohm) and impedance seen by V_2 = only R_1 (1kohm). This low impedance may load the signal source heavily. Therefore high res buffer is used proceeding each i/p to avoid this loading effect as shown in fig (b).

PREPARED BY PINJU RAVINDR ECE, GC

(b) An improved instrumentation am

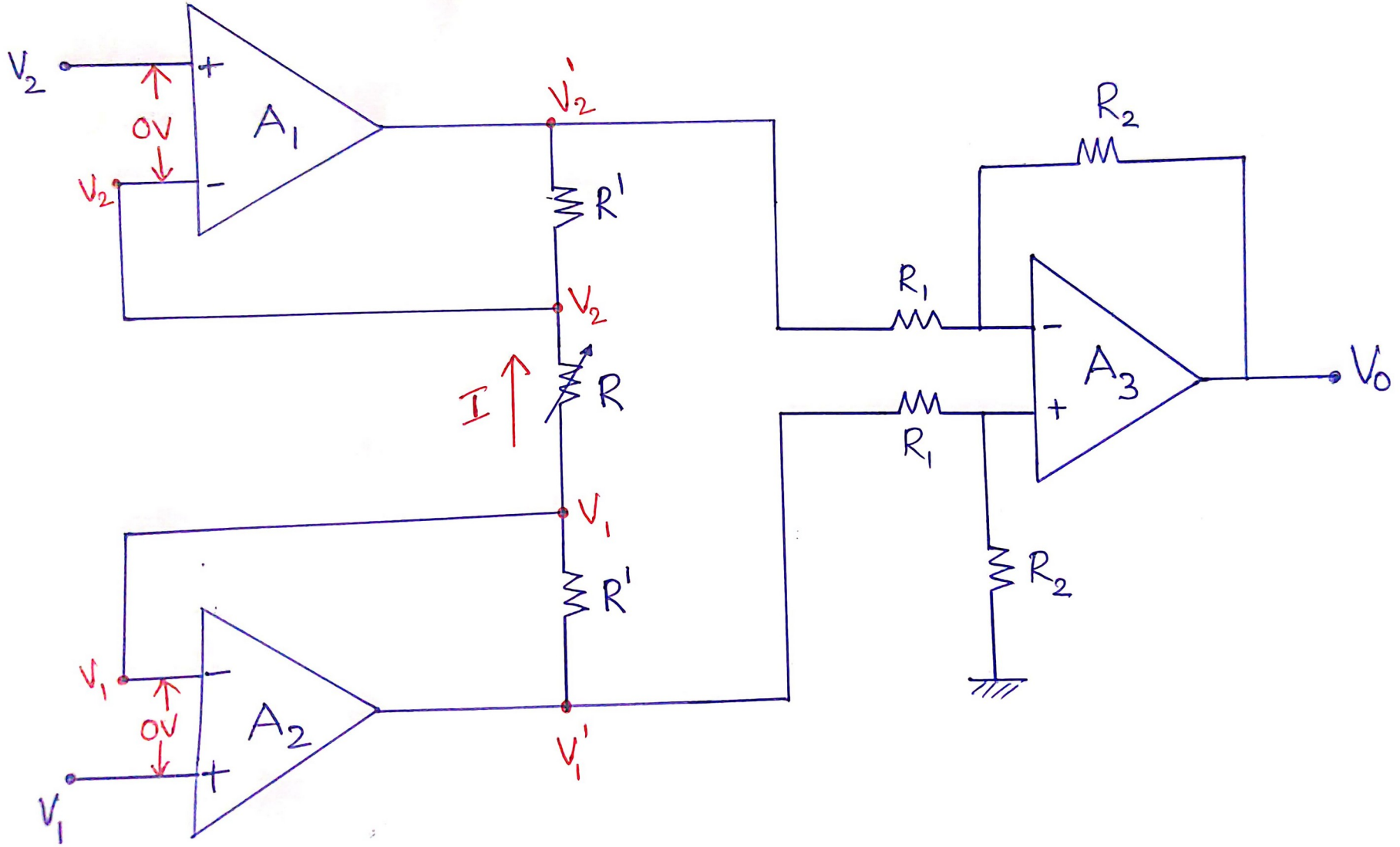

- Op amps A1 & A2 have differential i/p voltage as 0.
- For $V_1=V_2$ (common mode condition), voltage across R will be 0.
- As no current flows thru R & R′, the non inv ampr A1 acts as V follower. So its o/p

  $V_2' = V_2$
- Similarly A2 acts as V follower. So $V_1' = V_1$
- If $V_1 V_2$, current flows in R & R′ and $(V_2' - V_1') > (V_2 - V_1)$

Therefore the ckt has a differential gain & CMRR more compared to single op amp ckt of fig (a).

PREPARED BY RINJU RAVINDRAN, ADHOC ASST. PROF.
ECE, GCEK

- V at + i/p terminal of op amp A_3 is V_1'

- Using superposition thrm,

$V_0 = - V_2' + V_1' [1+]$

$V_0 = (V_1' - V_2')$ ----------(2)

Since no current flows into op amp, flowing (upwards) in R and passes thru R′ is

= also =

PREPARED BY RINU RAVINDRAN, ADHOC ASST. PROF. ECE, GCEK

From eqn 2,

$$V_0 = (V_1' - V_2') = (2R' + R)$$

$$V_0 = [\ ](2R' + R)$$

$$V_0 = (V_1 - V_2)[1 +$$

PREPARED BY RINJU RAVINDRAN, ADHOC ASST. PROF.
ECE, GCEK

In this eqn, if we choose $R_2 = R_1 = 25$Kohm (say) & $R' = 25$Kohm, R=50 ohm, then gain = 1001.

The difference gain of this instrumentation ampr can be varied by replacing res R by a potentiometer in Fig(b).

- R should never be made 0 as this will make the gain infinity.
- To avoid this, a fixed res in series with a potentiometer is used in place of R.

PREPARED BY RINJU RAVINDRAN, ADHOC ASST. PROF. ECE, GCEK

(c) Instrumentation ampr using transducer bridge : Fig©

- Ckt uses a resistive transducer whose res changes as a function of the physical qty to be measured.
- Bridge is initially balanced by a dc supply voltage V_{dc} so that $V_1=V_2$.
- As physical qty changes, res R_T of transducer also changes, causing an unbalance in the bridge (V_1 V_2).
- This differential voltage now gets amplified by the 3 op amp differential instrmntn ampr.
- Practical apps of instrmntn ampr with transducer bridge: temp indicator, temp controller, light intensity meter, etc.

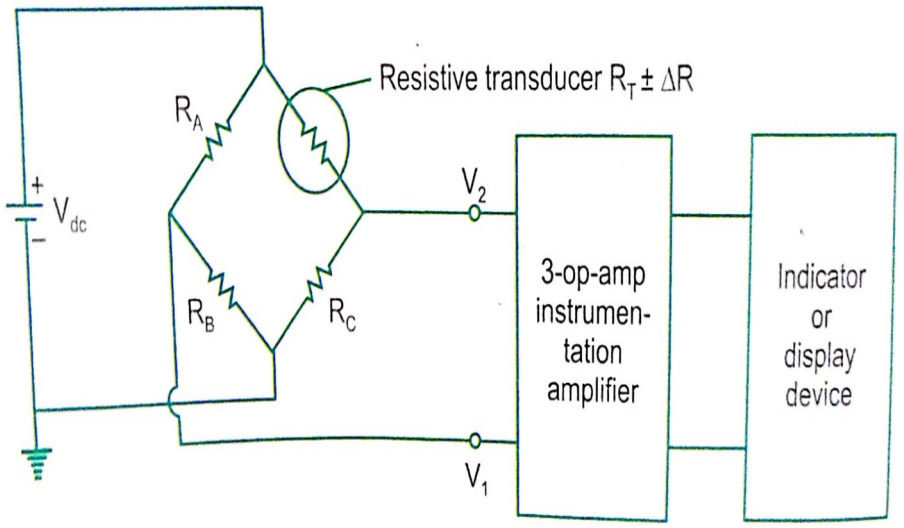

(c)

PREPARED BY KANU RAVINDRAN ASST. PROF. ECE GCEK

4. V to I and I to V converter

4.1. Voltage to current converter (Transconductance ampr)

In many applications, one may have to convert a voltage s/g to a proportional o/p current.

2 types of ckt possible :

i. V-I converter with floating load

ii. V-I converter with grounded load

PREPARED BY KINJU RAVINDRAN, ADHOC ASST. PROF.
ECE, GCEK

i. V-I converter with floating l

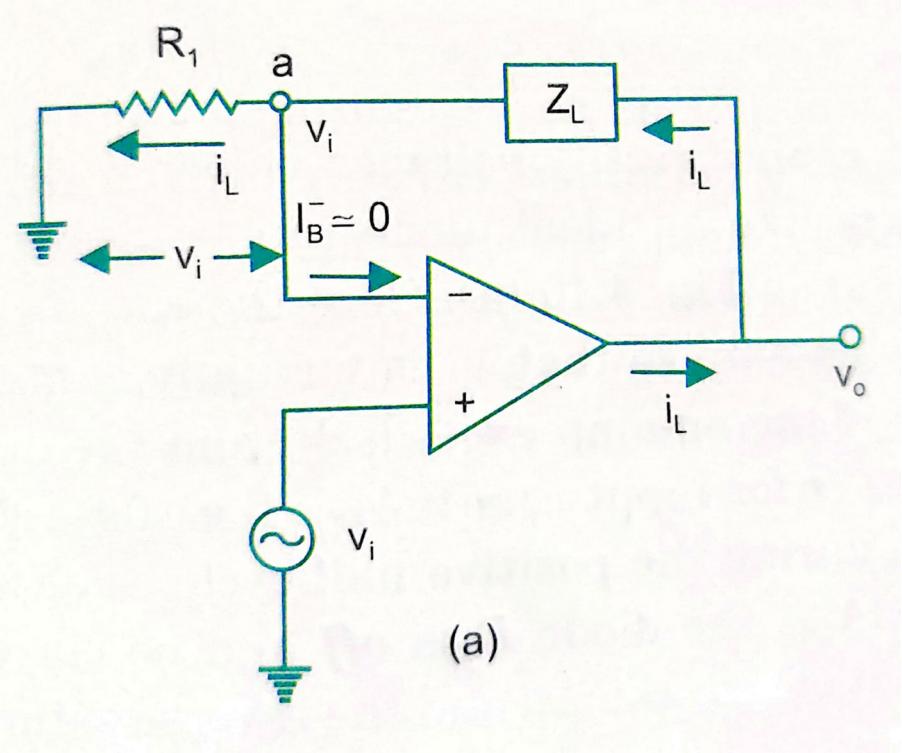

- Here load Z_L is floating.

- Voltage at node a

$$v_i = i_L R_1 \text{ as } I_B^- = 0$$

$$i_L =$$

- i/p voltage v_i is converted into an o/p current .
- It may be seen that same current flows thru the s/g source & load & therefore s/g source should be capable of providing this load current.

PREPARED BY RINJU RAVINDRAN
ECE, GCEK

ii. V-I converter with grounded load

- Let V_1 be the voltage at node a.
- KVL at node a

$i_1+i_2 = i_L$

L

$v_1 =$

Op amp is used in non inverting mode, so gain = 1+ R/R = 2

o/p voltage $v_0 = 2v_1 = v_i+v_0-i_LR$

$v_i = i_LR$

$i_L =$

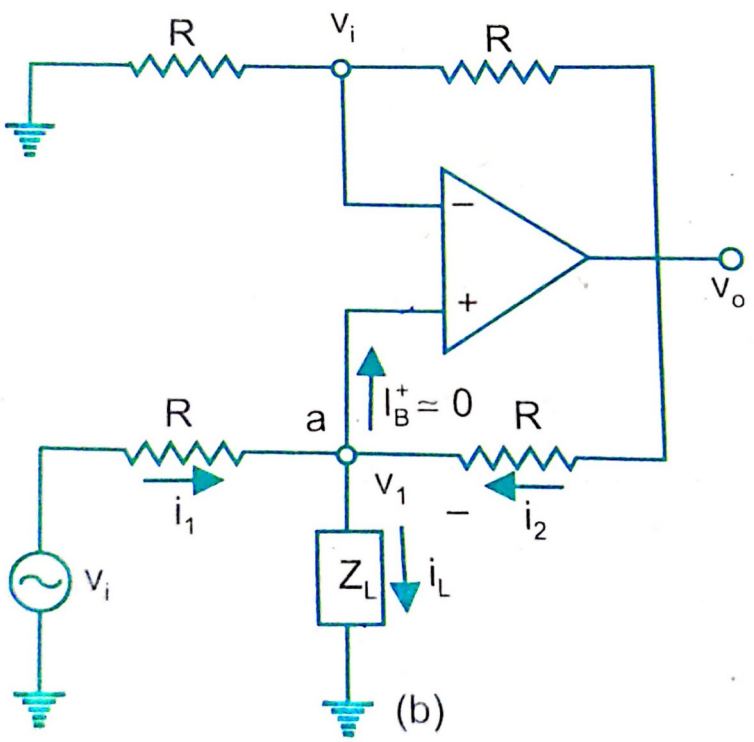

PREPARED BY RINJU RAVINDRAN ASST. PROF. ECE, C

- As the i/p impedance of a non inverting ampr is very high, this ckt has the advantage of drawing very little current from the source.
- V to I converter is used for low voltage dc and ac voltmeter, LED and Zener diode tester.

PREPARED BY RENJU RAVINDRAN, ADHOC ASST. PROF. ECE GCER

4.2. Current to voltage converter (Transresistance ampr)

- Photo cell, photo diode and photo voltaic cell give an o/p that is proportional to an incident radiant energy or light.
- Current through these devices can be converted to V by using a I to V converter & thereby the amnt of light or radiant energy incident on the photo device can be measured.
- Here (-) i/p terminal is at virtual grnd.

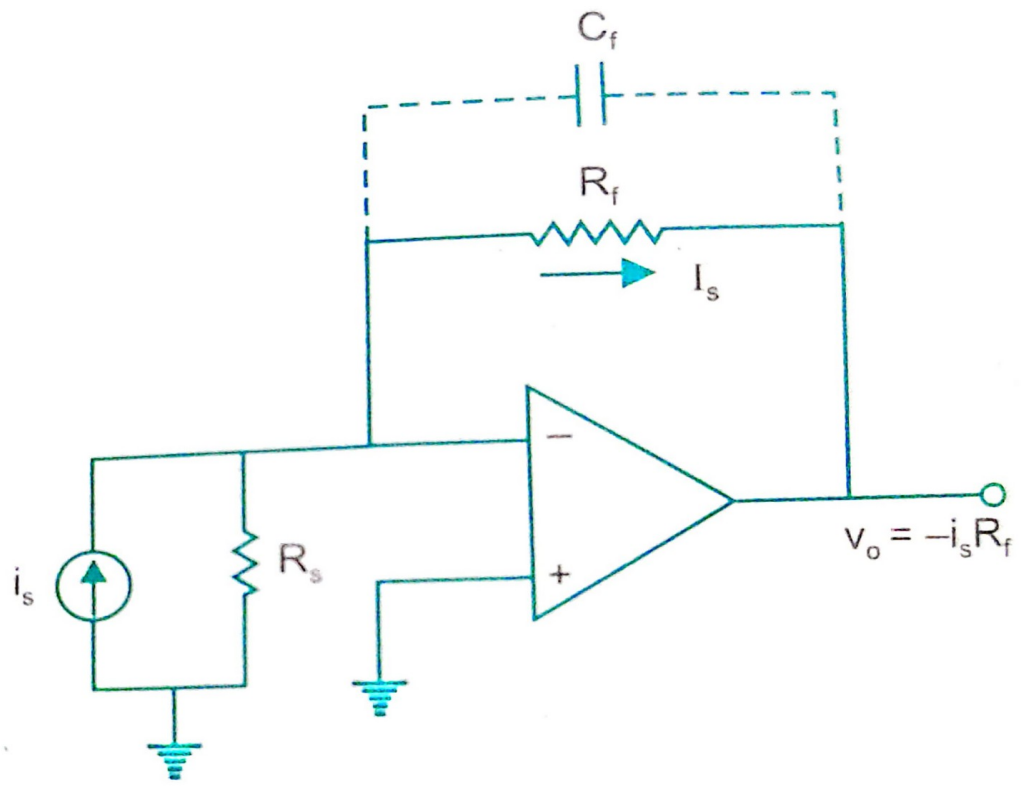

PREPARED BY RENJU RAVINDR ASST. PROF. ECE, G

- i_s flows thru f/b res R_f.
- o/p Voltage $V_0 = -i_s R_f$
- Lowest current that this ckt can measure will depend upon bias current I_B of the op amp.
- This means that μA741 (I_B = 3nA) can be used to detect lower currents.
- R_f sometimes shunted with capacitor C_f to reduce high freq noise and the possibility of oscillations.

PREPARED BY TINJU PAVINDRAN, ADHOC ASST. PROF. ECE, CCEK

5. Differentiator

- Ckt performs differentiation.

<u>Analysis</u>

- Node N is at virtual grnd potential. $v_N = 0$
- Current thru capacitor

$i_c = C_1 \ (v_i - v_N)$

$= C_1$

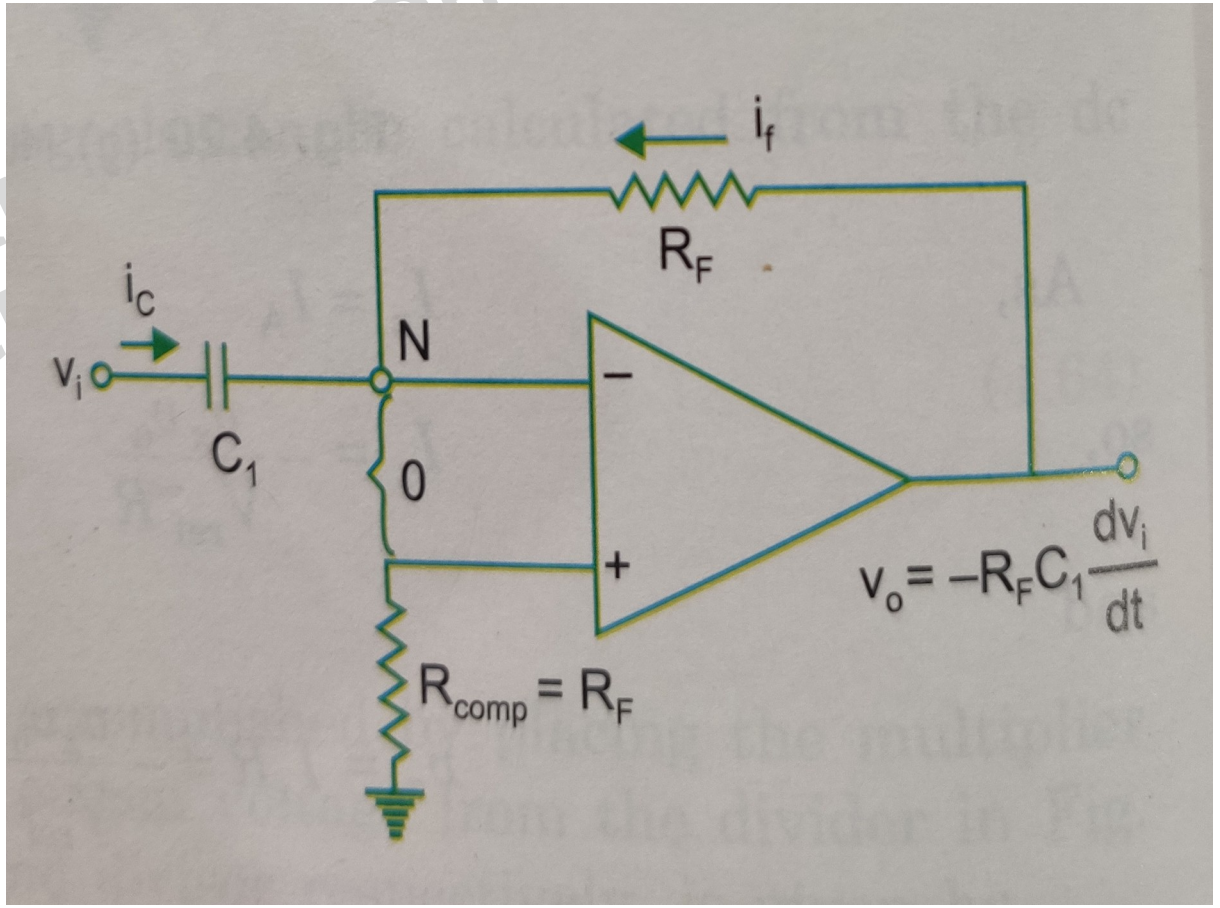

PREPARED BY RINJU DAVIS ... HOC ASST. PROF. ECE

- Current thru f/b res $i_F = v_0 / R_F$
- No current flows into op amp.
- Nodal eqn at N

$C_1 \quad + \quad = 0$

$$\mathbf{v_0 = -R_F C_1}$$

- Thus o/p V is a constant (**$-R_F C_1$**) times the derivative of i/p voltage.
- (-) sign indicates that a 180 deg phase shift of o/p waveform wrto i/p.
- Phasor eqvt of above eqn is **$V_0(s) = -R_F C_1 \, sV_i(s)$**
- V_0 & V_i is the phasor representation of v_0 & v_i.
- In steady state, put $s=j\omega$

PREPARED BY RINJU RAVINDRAN, ADHOC ASST. PROF. ECE, GCEK

- Magnitude of gain A of differntiator

$|A| = |\ \ | = |-j\omega R_F C_1| = \omega R_F C_1$

$|A| = \omega R_F C_1$

From this eqn, we can draw the freq response of op amp differentiator.

This eqn can be rewritten as $|A|=$

Where $f_a =$

At $f = f_a$, $|A| = 1$ ie 0 dB & gain increases at a rate of +20dB/decade.

Thus at high freq, a differentiator may become unstable & break into oscillation.

PREPARED BY RINJU RAVINDRAN, ADHOC ASST. PROF. ECE, GCEK

- One more problem in basic op amp differentiator is that , the input impedance { = = } decreases with increase in freq.
- Thus making the ckt sensitive to high freq noise.

PRACTICAL DIFFERENTIATOR

- Eliminates the problem of instability and high freq noise.
- The addition of resistor R_1 and capacitor C_F stabilizes the circuit at higher frequencies, and also reduces the effect of noise on the circuit.

PREPARED BY RINJU RAVINDRAN, ADHOC ASST. PROF. ECE GCEK

PRACTICAL DIFFERENTIATOR

- Transfer function of this ckt

=

= -

For = , we get

- = -

Where f_b =

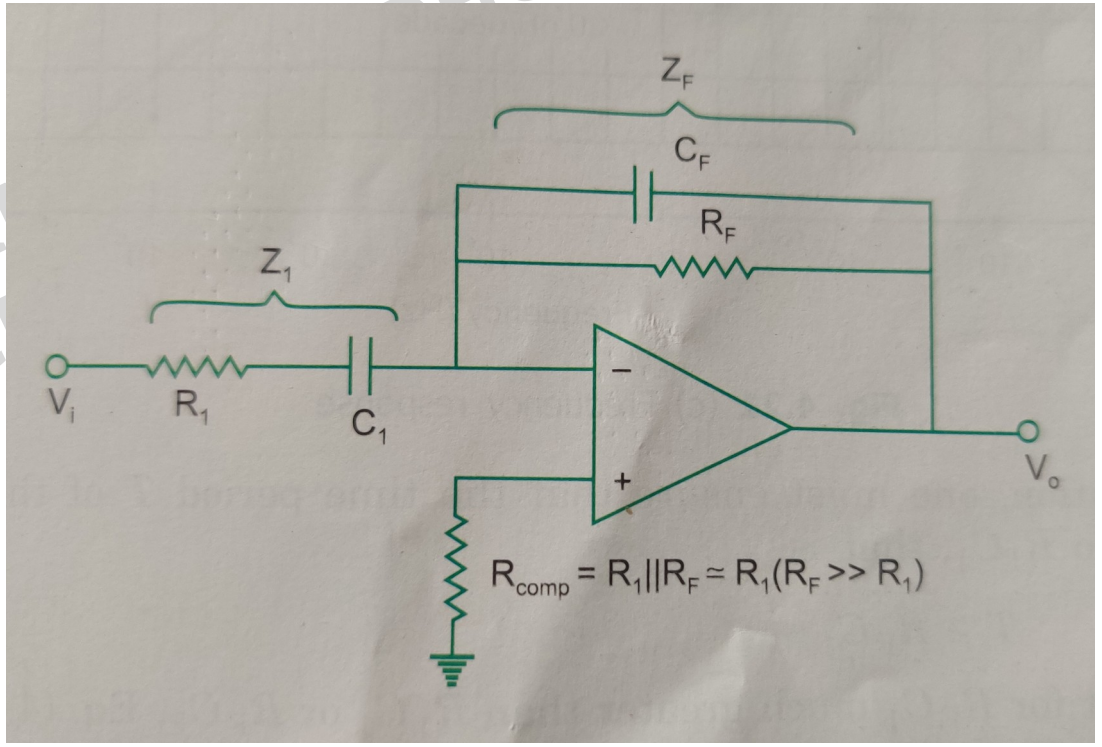

PREPARED BY RINJU RAVI ... OHOC ASST. PROF. ECE

Freq response

- Gain increases at +20dB/decade for freq $f<f_b$
- Gain decreases at -20dB/decade for freq $f>f_b$
- This 40dB/decade change in gain is caused by $_1$ and $_F$ factors.
- For basic differentiator, freq response would have increased continuously at the rate of +20dB/decade even beyond f_b causing stability problem at high freq.
- Thus gain at HF is reduced significantly thereby avoiding HF noise & stability problems.
- Value of f_b should be selected such that $f_a < f_b < f_c$
- Where f_c is unity gain bandwidth of the op amp in open loop configuration.

PREPARED BY RINJU RAVINDRAN, AD HOC ASST. PROF. ECE, GCEK

Freq response

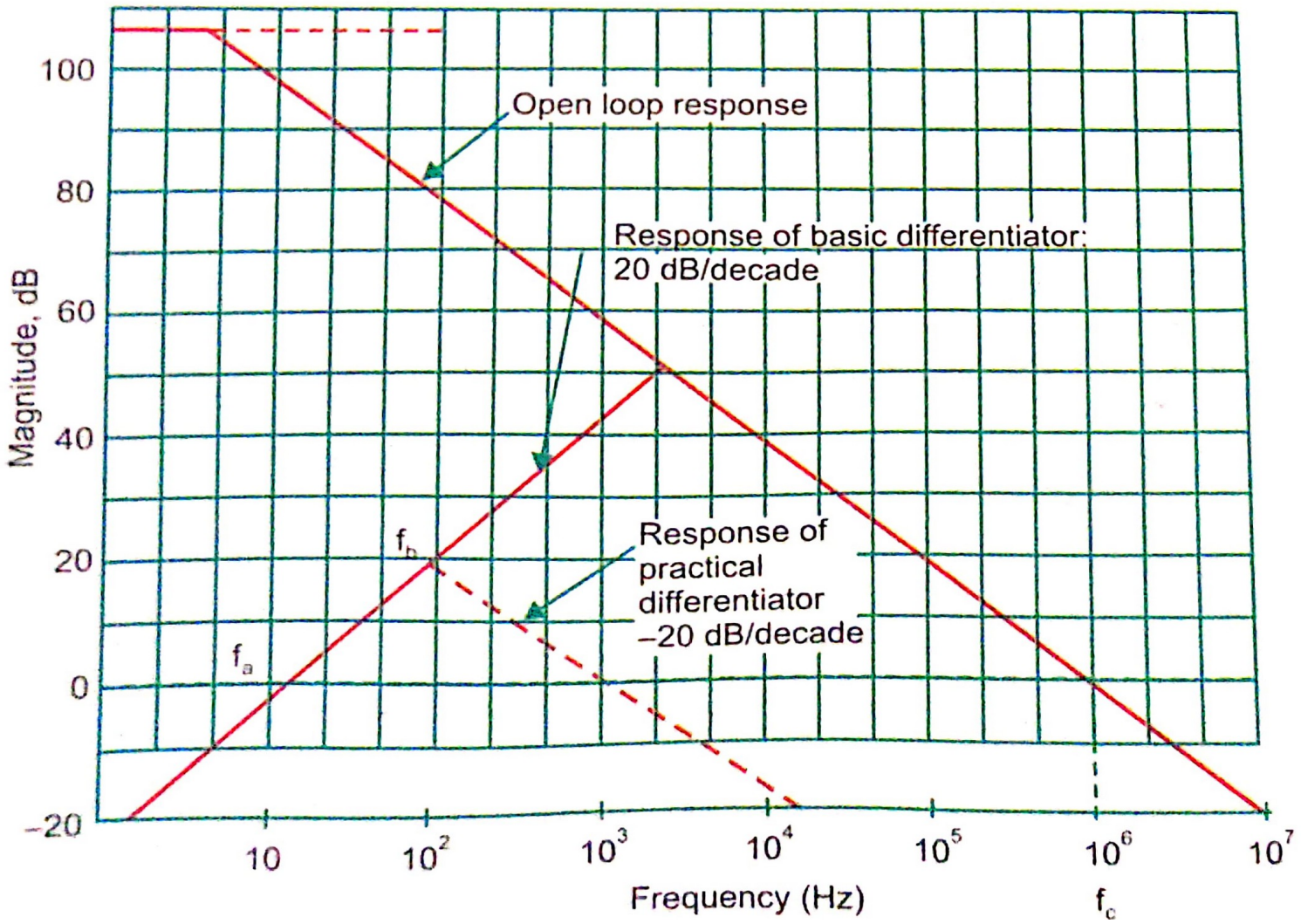

PREPA
ASST. PROF.

- For good differentiation, one must ensure that the time period T of the i/p s/g T
- For >> or , eqn reduces to
- -
- That is o/p V remains same as in the case of ideal differentiator as

$$v_0 = -R_F C_1$$

- Res R_{comp} $(=R_1||R_F)$ is connected to (+) terminal to compensate for i/p bias current.

PREPARED BY RINJU RAVINDRAN, ADHOC ASST. PROF. ECE, GCEK

A good differentiator may be designed as per following steps :

1. Choose f_a equal to highest freq of i/p s/g. Assume a practical value of C_1 (<1μF) and then calculate R_F .
2. Choose f_b=10 f_a (say). Now calculate values of R_1 and C_F so that $R_1C_1 = R_FC_F$

PREPARED BY RINJU RAVINDRAN, ADHOC ASST. PROF. ECE, GCEK

6. Integrator

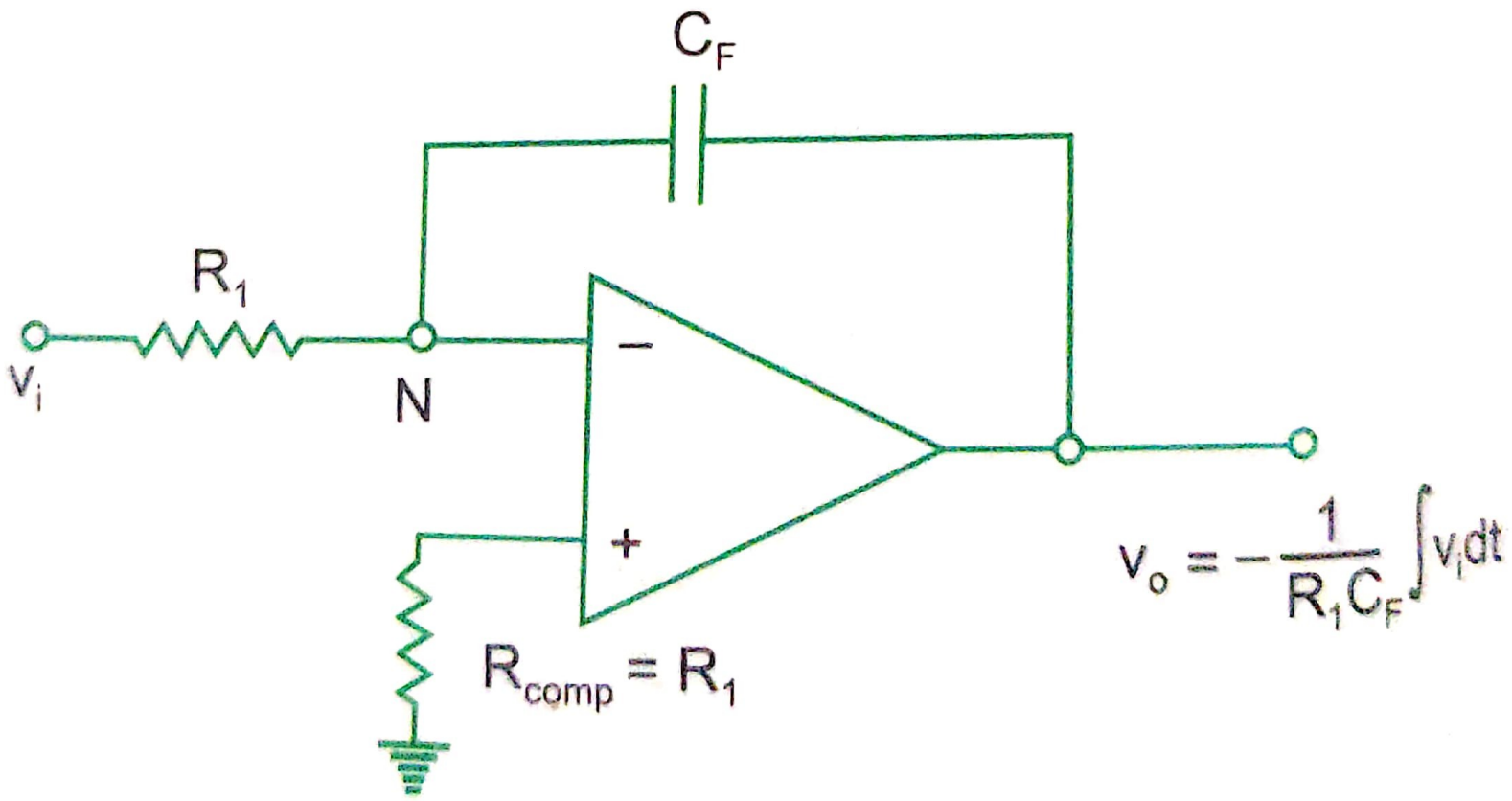

ASST. PROF.
PP

- Noda eqn at N

$= - v_i$

Integrating on both sides,

$$v_0(t) = - \ dt + v_0(0)$$

Where $v_0(0)$ = initial o/p voltage

Ckt thus provides an o/p V which is proportional to the time integral of i/p and is the time constant of the integrator.

(-) sign indicates inverting integrator.

$R_{comp}=R_1$ to minimize effect of i/p bias current.

PREPARED BY RINJU RAVINDRAN, ADHOC ASST. PROF. ECE, GCEK

- Simple low pass RC ckt can also act as integrator when time const is very large.
- This requires very large values of R & C.
- But this has practical limitations.
- In op amp integrator by Miller's thrm, the effective i/p capacitance becomes $C_F (1-A_v)$; gain of op amp A_v .
- For ideal op amp, $A_v = \infty$. So effective time const of op amp integrator becomes very large which results in perfect integration.
- Freq domain analysis of integrator working :

$$v_0(t) = - \quad dt + v_0(0)$$

$$V_0(s) = - \quad V_i(s)$$

PREPARED BY RINJU RAVINDRAN, ADHOC ASST. PROF. ECE, GCEK

- In steady state, put $s = j\omega$

$V_0(j\omega) = - \ V_i(j\omega)$

Magnitude of gain or integrator transfer function is

$|A| = | \ | = | - \ | =$

PREPARED BY RINJU RAVINDRAN, ADHOC ASST. PROF.
ECE, GCEK

- Freq response (Bode plot) of a basic & lossy integrator is shown.
- Straight line of slope -6dB/octave or -20 dB/decade.
- f_b is the freq at which gain of integrator is 0 dB

  $f_b =$

- At $\omega=0$, $|A| = \infty$
- At DC, C_F act as OC. Hence no –ve f/b. Thus op amp in OL, resulting in an ∞ gain.

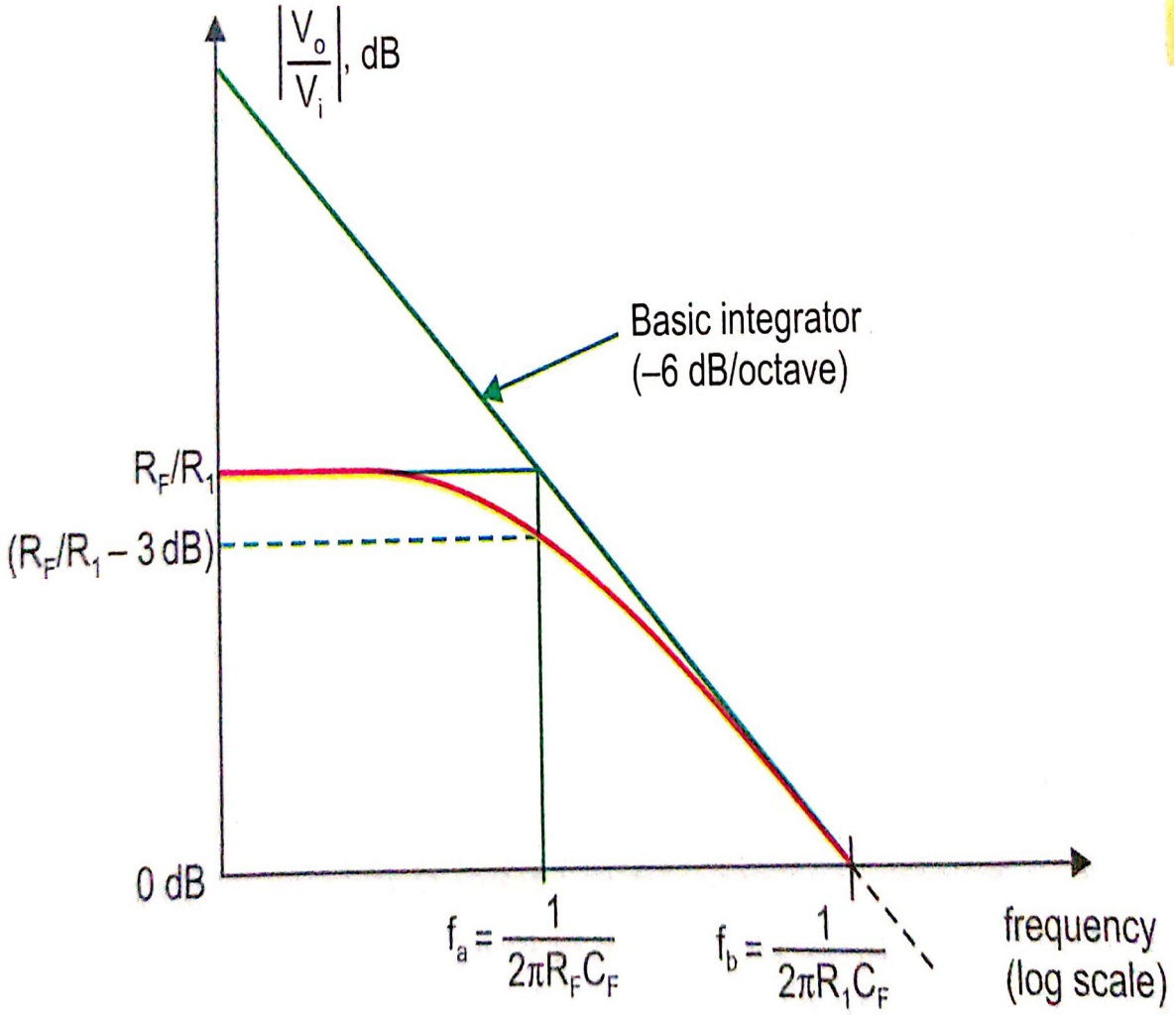

PREPARED BY RINJU RAVIN
ECE

- Practically o/p never becomes ∞
- o/p of ampr saturates at a voltage close to ± power supply of op amp depending on the polarity of i/p dc s/g.
- As the gain of integrator decreases with increasing freq, integrator ckt doesnot have any freq problem as faced in a differentiator.
- But at low freqs such as at dc ($\omega \approx 0$), the gain becomes ∞ or saturates.

PREPARED BY BINJU RAVINDRAN, ADHOC ASST. PROF. ECE, GCEK

Practical integrator ckt(Lossy integrator)

- Gain of integrator at low freq (dc) can be limited to avoid the saturation problem if the f/b cap. is shunted by a res R_F.
- Parallel combination of R_F & C_F behaves like a practical capacitor which dissipates power unlike an ideal capacitor.
- Bcoz of this, it is called as lossy integrator.

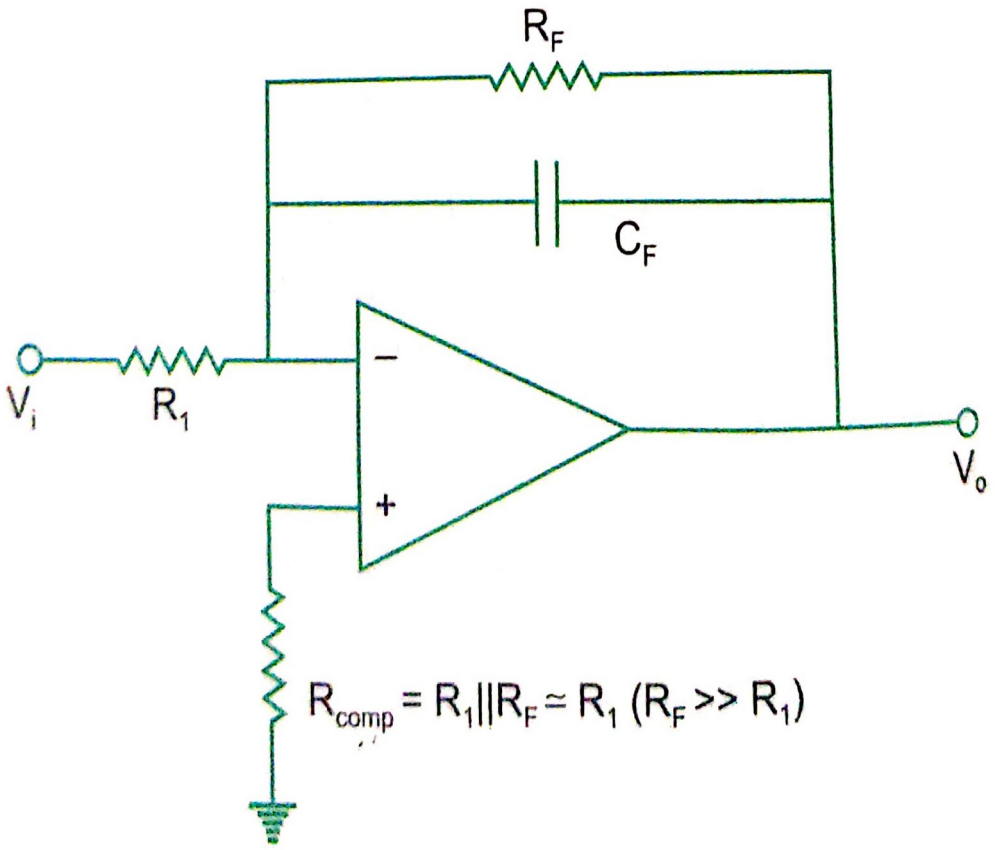

PREPARED BY PINJU RAVINDR ASST. PROF. ECE, G

- R_F limits low freq gain to $-R_F/R_1$ (generally $R_F=10\ R_1$) & thus provides dc stabilization.

<u>Analysis</u>

- Nodal eqn at inverting terminal of op amp

-

- If R_F is very large, lossy integrator approximates ideal integrator.
- For $s=j\omega$, magnitude of gain of lossy intregrator

$$|A| = \ |\ | = \ =$$

PREPARED BY PINJU RAVINDRAN, ADHOC ASST. PROF.
ECE, GCEK

Bode plot :

- At low freqs, gain is const at R_F / R_1.
- Break freq ($f=f_a$) at which gain is 0.707 (R_F / R_1) or -3dB below its value of R_F / R_1 is calculated as

- $|A| = \quad | \quad | = \quad =$

- $=$

- Solving for $f=f_a$, we get $f_a =$

PREPARED BY RINJU RAVINDRAN, AD HOC ASST. PROF.
ECE, GCEK

- This freq is very important as it tells us where the useful integration range starts,
- If i/p freq is < f_a ,ckt acts like a simple inverting ampr and no integration results.
- At i/p freq = f_a , 50% accuracy results.
- The practical thumb rule is that if i/p freq is 10 times f_a , then 99% accuracy can be obtained.

PREPARED BY RINJU RAVINDRAN, ADHOC ASST. PROF. ECE, GCEK