OP AMP WITH NEGATIVE FEEDBACK

PREPARED BY RINJU RAVINDRAN, ADHOC ASST. PROF. ECE, GCEK

Introduction

- Clipping occurs in open loop config when o/p attempts to exceed the saturation levels of op amp.
- Since open loop gain of op amp is very high, only the smaller signals(μV or less)having very low freqs may be amplified accurately w/o distortion.
- But this small s/gs are susceptible to noise.

PREPARED BY RINJU RAVINDRAN, AD HOC ASST. PROF. ECE, UCEK

- Besides being large, OL Voltage gain of op amp is not a constant. It varies with temp and power supply as well as mass production techniques.
- Variations in V gain are relatively large in OL op amp. ------ unsuitable for many linear app.s
- BW(band of freqs for which gain remains const) of most OL op amps is negligibly small. For this reason, the OL opamp is impractical in ac applctns.
- Eg: OL BW of 741 IC is approx. 5 Hz. However, in almost all ac app.s , a BW larger than 5Hz is required.
- For these reasons, OL op amp generally not used in linear apps.
- Used for non linear cases like square wave generator.

PREPARED BY RENJU RAVINDRAN, ADHOC ASST. PROF. ECE, GCEK

Feedback

- We can select as well as control the gain of op amp if we use f/b.
- o/p s/g is fed back to i/p either directly or via another network.
- If the s/g fed back is of opp polarity or out of phase by 180 deg(or its odd integer multiple) w.r.to i/p s/g, f/b is called **–ve f/b**
- An amplifier with –ve f/b has a self correcting ability against any change in o/p V caused by changes in environmental conditions.
- -ve f/b also called as **degenerative f/b** because when used it degenerates(reduces) the o/p V amplitude and inturn

PREPARED BY RINJU RAVINDRAN, ADHOC ASST. PROF. ECE, GCEK

- If s/g fed back is of same polarity or in phase with i/p s/g ……..**+ve F/b**
- In +ve f/b, the f/b s/g aids the i/p. hence called as **regenerative f/b**.
- Used in oscillator ckts.

- When used in amplifiers, -ve f/b reduces V gain but advantages are :
  - ❑Stabilizes the gain
  - ❑Increases the BW
  - ❑Changes the i/p & o/p res.
  - ❑Decrease in harmonic or non linear distortion
  - ❑Reduction in the effect of variations in temp & supply V on the o/p of op amp

PREPARED BY BINJU RAVINDRAN, ADHOC ASST. PROF, ECE, GCEK

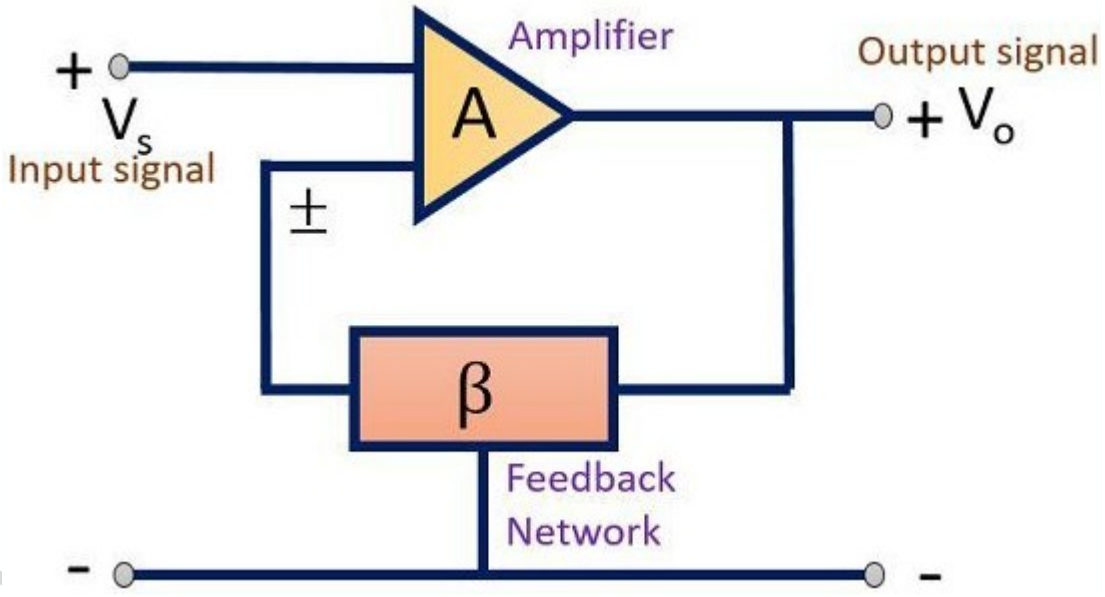

PREPARED BY ASST. PROF. ECE,

Effect of negative feedback on amplifier performance:

- The effect of negative feedback on an amplifier is considered in relation to gain, gain stability, distortion, noise, input/output impedance and bandwidth and gain-bandwidth product.

PREPARED BY RINJU RAVINDRAN, AD HOC ASST. PROF. ECE, GCEK

Gain

- Fig. shows a negative f/b ampr . A is the open loop gain of ampr, β is the f/b loop gain.
- Here o/p of f/b ampr ---------- $V_f = V_o\beta$
- $V_o = AV_i$
- $V_o = A(V_s - V_f)$

  $= A(V_s - V_o\beta)$
- $V_o + A\,V_o\beta = AV_s$
- $V_o(1 + A\,\beta) = AV_s$

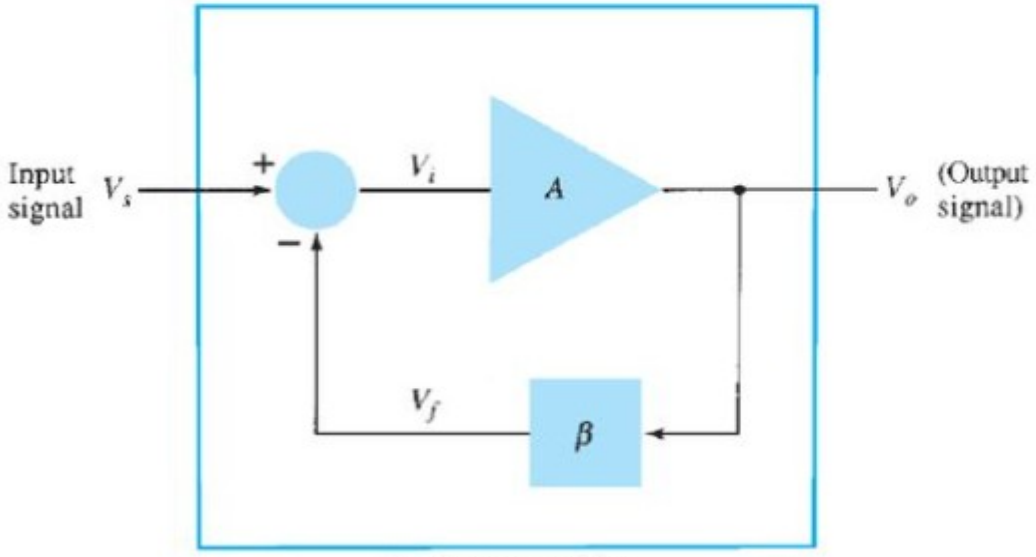

Feedback amplifier

PREPARED BY RINJU RAVINDRAN, ADHOC ASST. PROF. ECE, GC

- Overall gain or Closed loop gain

$A_f =$

$A_f =$ ---------- **for –ve f/b, gain decreases**

$A_f =$ ----------**for +ve f/b, gain increases**

PREPARED BY RINJU RAVINDRAN, ADHOC ASST. PROF. ECE, GCEK

Gain Stability:

An important advantage of negative voltage feedback is that the resultant gain of the amplifier can be made independent of transistor parameters or the supply voltage variations,

$$A_f =$$

For negative voltage feedback in an amplifier to be effective, the designer deliberately makes the product Aβ much >> unity.

Therefore, in the above relation, '1' can be neglected as compared to Aβ and the expression becomes

$$A_f = A/(1+A\beta) = 1/\beta$$

PREPARED BY RENJU RAVENDRAN, ADHOC ASST. PROF. ECE, GCEK

- It can be seen that the gain now depends only upon feedback fraction, β, i.e., on the characteristics of feedback circuit.
- As feedback circuit is usually a voltage divider (a resistive network), therefore, it is unaffected by changes in temperature, variations in transistor parameters and frequency.
- Hence, the gain of the amplifier is extremely stable.

PREPARED BY PINJU RAKTINDRAN, AD HOC ASST. PROF. ECE, GCEK

Distortion:

- A power amplifier will have non-linear distortion because of large signal variations.
- The negative feedback reduces the nonlinear distortion.

$$D_f = D/(1+A\beta)$$

Where D = distortion in amplifier without feedback

D_f = distortion in amplifier with negative feedback

By applying negative feedback, the distortion is reduced by a factor $(1+A\beta)$

PREPARED BY BINJU RAVINDRAN, ADHOC ASST. PROF. ECE, GCEK

Noise :

- There are many no. of sources of noise in an amplifier.
- The noise N can be reduced by the factor of (1+Aβ), in a similar manner to non-linear distortion, so that the noise with feedback is given by

$$N_f = N/(1+A\beta)$$

PREPARED BY RINJU RAVINDRAN, ADHOC ASST. PROF. ECE, GCEK

Input / Output Impedance :

- The input and output impedances will also improve by a factor of (1+Aβ), based on feedback connection type.

PREPARED BY RINJU RAVINDRAN, ADHOC ASST. PROF. ECE, GCEK

Bandwidth and Gain-bandwidth Product:

ASST. PROF. ECE,

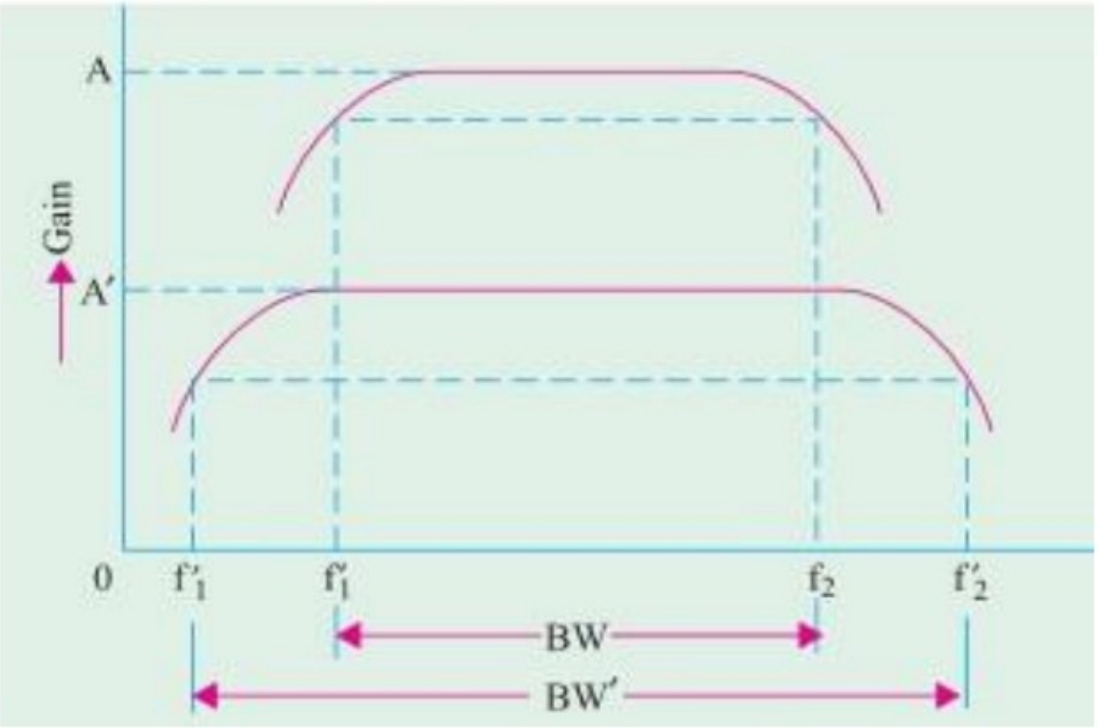

$$f_{hf} = f_h (1+A\beta)$$

$$f_{lf} = f_l /(1+A\beta)$$

PR

Bandwidth and Gain-bandwidth Product

- Each of higher and lower cut-off frequencies will improve by a factor of (1+Aβ). However, gain-bandwidth product remains constant.

<u>BW of the amplifier:</u>

- This refers to the ‘band’ of frequencies for which the amplifier has a useful gain. Outside this useful band, the gain of the amplifier is considered to be insufficient compared with the gain at the centre of the bandwidth. The bandwidth specified for the voltage amplifiers is the range of freq.s for which the amplifiers gain is greater than 0.707 of the max. gain
- decibels are used to indicate gain.

PREPARED BY R.NANDHA RAVINDRAN, ADHOC ASST. PROF. ECE, GCEK

Block diagram representation of f/b configurations

- An op amp that uses a f/b ----- **f/b amplifier**.
- Also called **Closed loop amplifier** bcoz f/b forms a closed loop(CL) btw i/p & o/p.
- F/b ampr has 2 parts : an op amp & f/b ckt.
- F/b ckt may be made up of either passive components, active comp or both.
- In this, inorder to develop the basic f/b concepts, we are using only purely resistive f/b ckts.

PREPARED BY RINJU RAVINDRAN, ADHOC ASST. PROF. ECE, GCEK

- A CL ampr can be represented using 2 blocks: one for op amp and other for f/b ckt.
- There are 4 ways to connect these 2 blocks.
- These connections are classified acc to whether the **Voltage or current is fed back to the i/p in series or parallel** as follows:

1. Voltage series f/b
2. Voltage shunt f/b
3. Current series f/b
4. Current shunt f/b

PREPARED BY RAJU RAVINDRAN, ADHOC ASST. PROF. ECE, GCEK

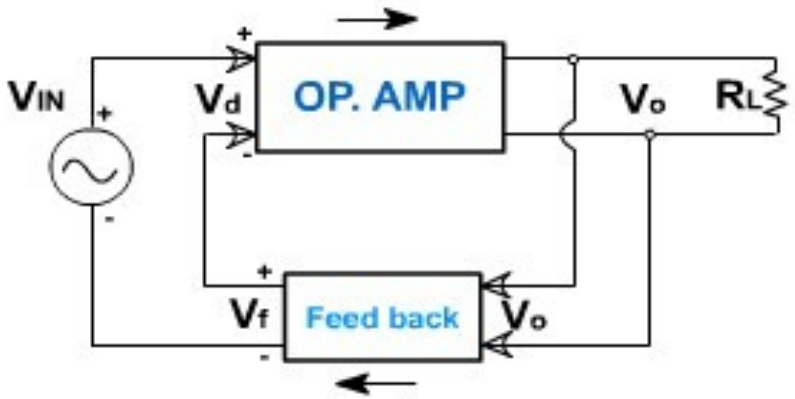

Voltage series feedback

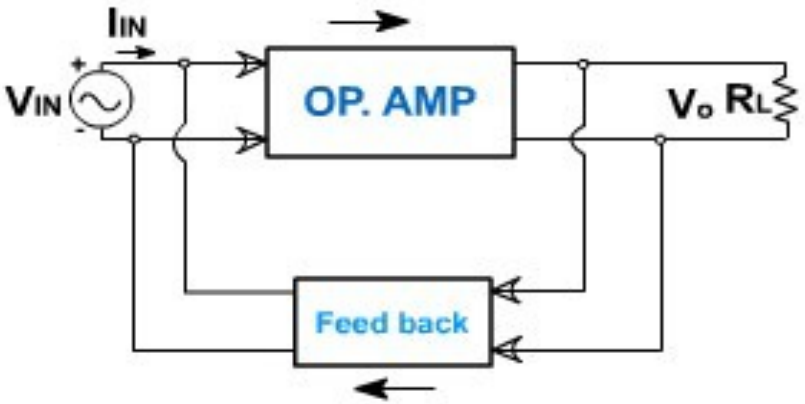

Voltage shunt feedback

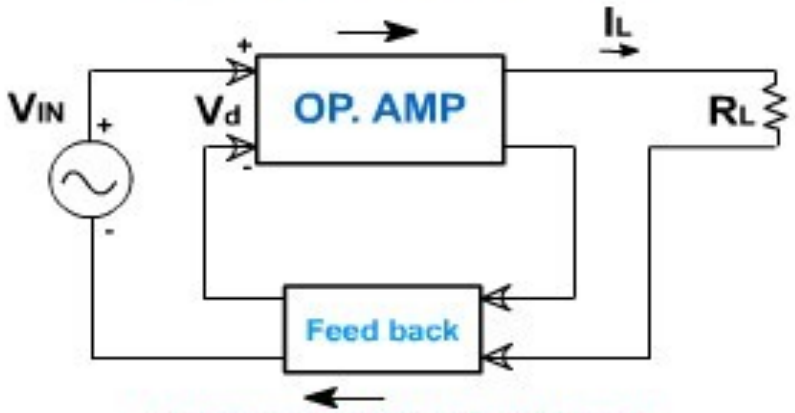

Current series feedback

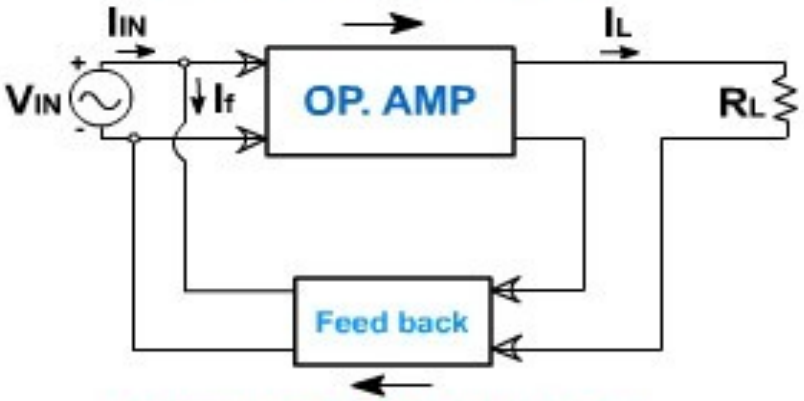

Current shunt feedback

PREPA
F. ECE,

- **Voltage amplifier---**Voltage series f/b --series-shunt feedback

  voltage mixing and voltage sampling
- **Trans-resistance amplifier---**Voltage shunt f/b---shunt-shunt feedback

  Current mixing and voltage sampling
- **Trans-conductance ampr---**Current series f/b------series-series feedback

  Voltage mixing and current sampling
- **Current amplifier---**Current shunt f/b---shunt-series feedback

  Current mixing and current sampling

PREPARED BY RINJU RAVINDRAN, ADHOC ASST. PROF. ECE, GCEK

- In V series and V shunt, the V across load R_L is the input voltage to the f/b ckt. The f/b quantity (either V or I) is the o/p of f/b ckt and is proportional to o/p Voltage.
- In current series and current shunt, the load current I_L flows into the f/b ckt. O/p of f/b ckt (either V or I) is proportional to the load current I_L .
- V series & V shunt ----most commonly used f/b.

PREPARED BY RINJU RAVINDRAN, AD HOC ASST. PROF. ECE, GCEK

Voltage-Series Feedback

- In this, a fraction of the output voltage is applied in series with the input voltage through the feedback circuit. This is also known as **shunt-driven series-fed** feedback, i.e., a parallel-series circuit.
- The feedback circuit is placed in shunt with the output but in series with the input.

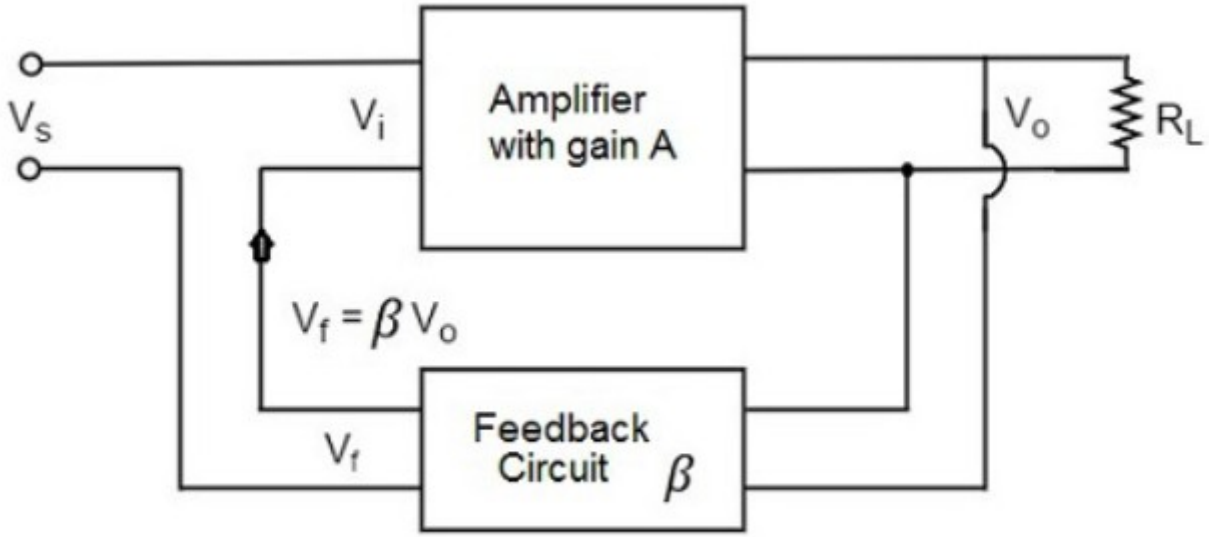

PREPARED BY GAVINDRAN, ADHOC ASST. PROF. ECE, GCEK

- As the feedback circuit is connected in shunt with the output, the output impedance is decreased and due to the series connection with the input, the input impedance is increased.

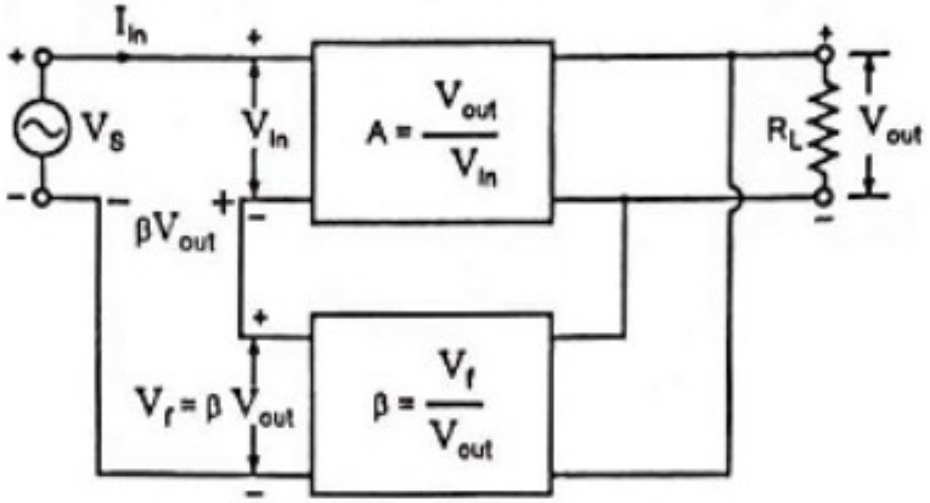

(a) Voltage-Series Feedback

PREPARED BAM, AD HOC ASST. PROF. ECE,

Voltage-Shunt Feedback

- In this, a fraction of the output voltage is applied in parallel with the input voltage through the feedback network. This is also known as **shunt-driven shunt-fed** feedback i.e., a parallel-parallel type.
- The feedback circuit is placed in shunt with the output and also with the input.

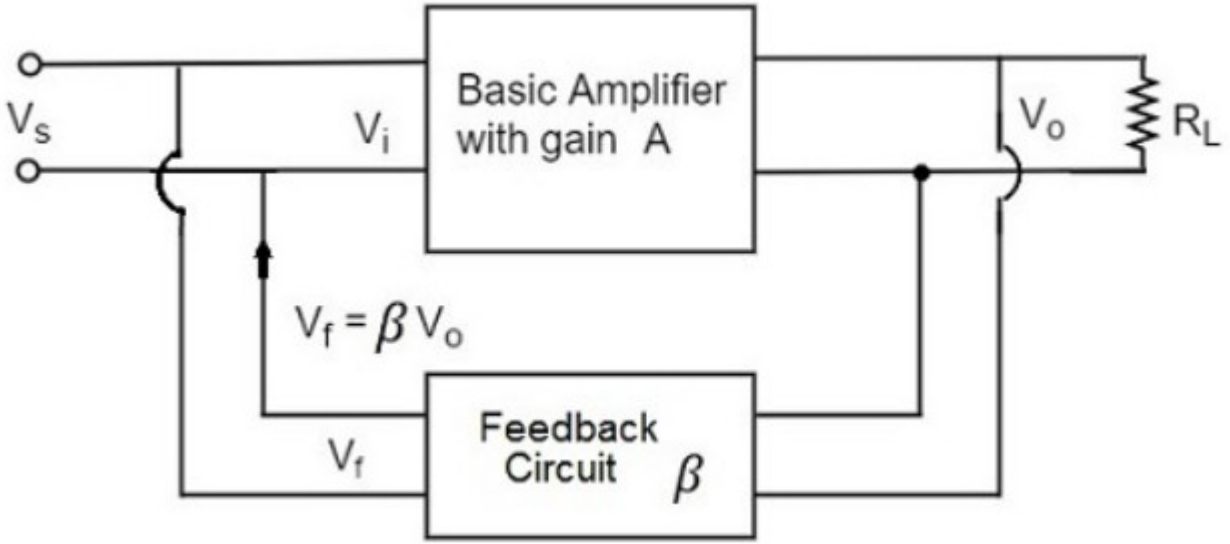

PREPARED BY AVINDRAN, ADHOC ASST. PROF. ECE, GCEK

- As the feedback circuit is connected in shunt with the output and the input as well, both the output impedance and the input impedance are decreased.

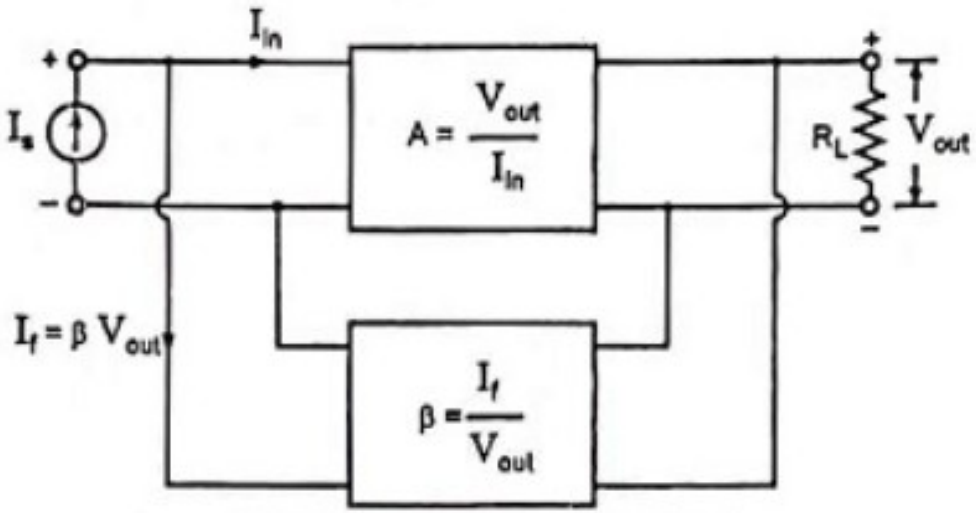

(b) Voltage-Shunt Feedback

PREPARED BY ... SAN, ADHOC ASST. PROF. ECE,

Current-Series Feedback

- In this, the load current is applied in series to the feedback circuit. This is also known as **series-driven series-fed** feedback i.e., a series-series circuit.
- It is evident that the feedback circuit is placed in series with the output and also with the input.

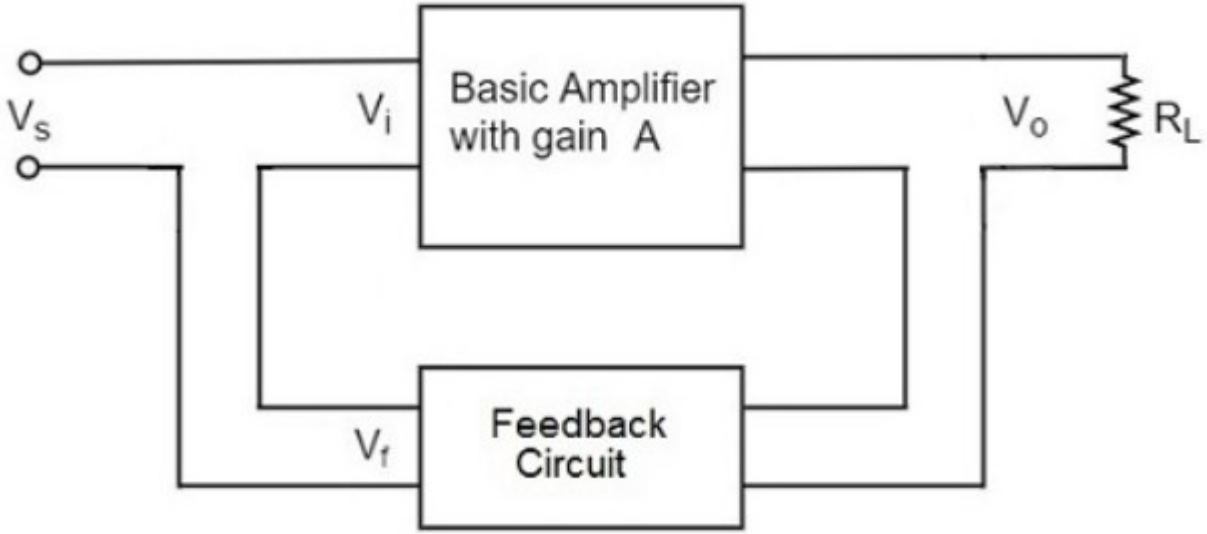

PREPARED BY RAVINDRAN, AD HOC ASST. PROF. ECE, GCEK

- As the feedback circuit is connected in series with the output and the input as well, both the output impedance and the input impedance are increased.

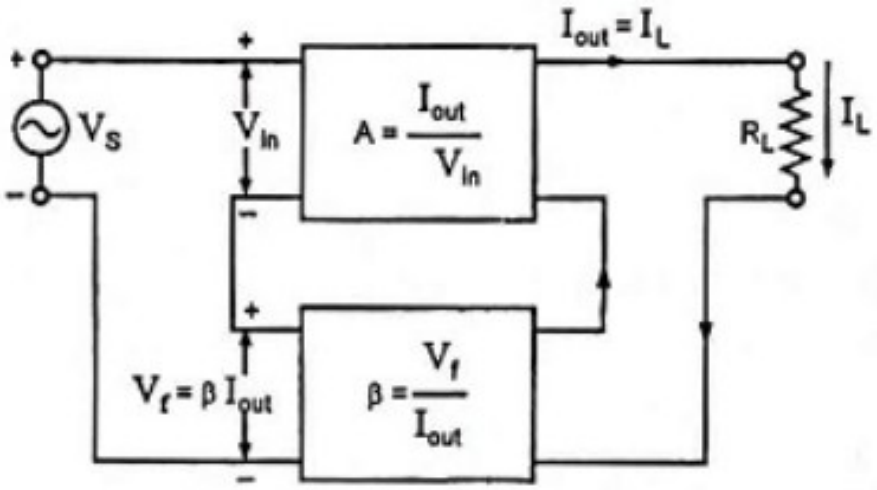

(c) Current-Series Feedback

PREPARED BY RAN, ADHOC ASST. PROF. ECE,

Current-Shunt Feedback

- In this, load current is applied in series to the feedback circuit. This is also known as **series-driven shunt-fed** feedback i.e., a series-parallel circuit.
- It is evident that the feedback circuit is placed in series with the output but in parallel with the input.

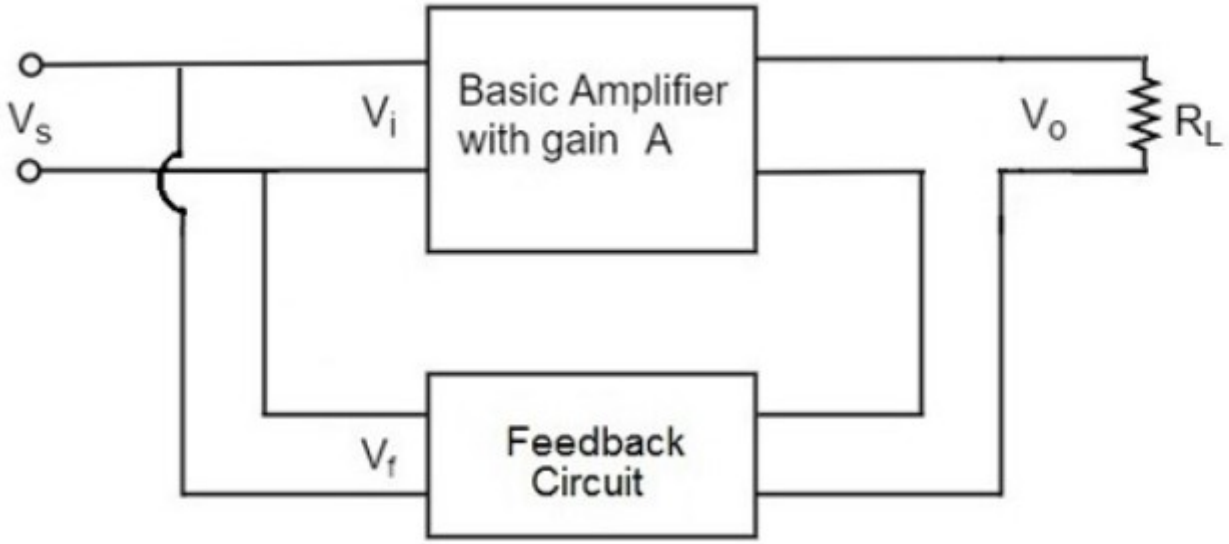

PREPARED BY SUDHAN, ADHOC ASST. PROF. ECE,

- As the feedback circuit is connected in series with the output, the output impedance is increased and due to the parallel connection with the input, the input impedance is decreased.

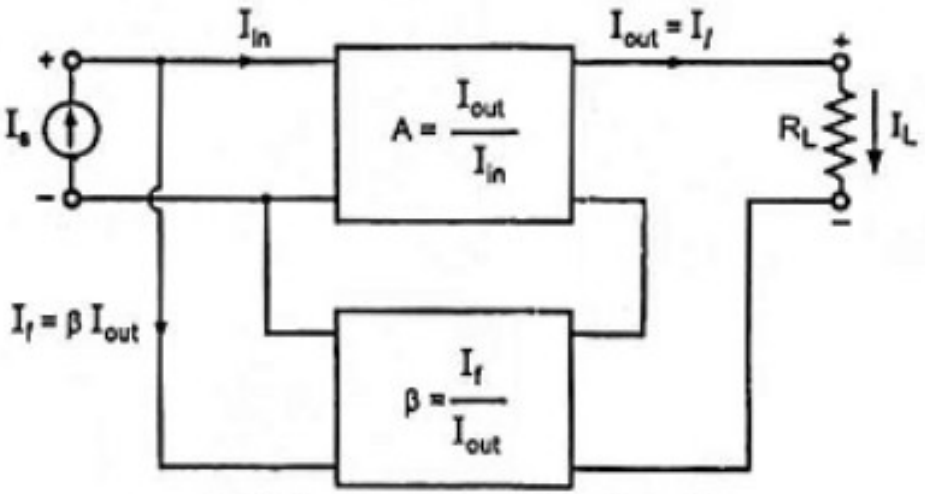

(d) Current-Shunt Feedback

PREPARED BY ... GRAM, AD HOC ASST. PROF. ECE,

Characteristics	Types of Feedback			
	Voltage-Series	Voltage-Shunt	Current-Series	Current-Shunt
Voltage Gain	Decreases	Decreases	Decreases	Decreases
Bandwidth	Increases	Increases	Increases	Increases
Input resistance	Increases	Decreases	Increases	Decreases
Output resistance	Decreases	Decreases	Increases	Increases
Harmonic distortion	Decreases	Decreases	Decreases	Decreases
Noise	Decreases	Decreases	Decreases	Decreases

ECE,
PR

Effect of negative f/b on i/p & o/p impedance

Input impedance for the connection is dependent on whether series/shunt f/b is used.

- For series f/b, i/p impedance is increased
- For shunt f/b, i/p impedance is decreased

Output impedance for the connection is dependent on whether voltage/current f/b is used.

- For voltage f/b, o/p impedance is decreased
- For current f/b, o/p impedance is increased

PREPARED BY RINJU RAVINDRAN, ADHOC ASST. PROF. ECE, GCEK

$$R_{if} = R_i\,(1+A\beta)$$

$$R_{of} = R_o\,/\,(1+A\beta)$$

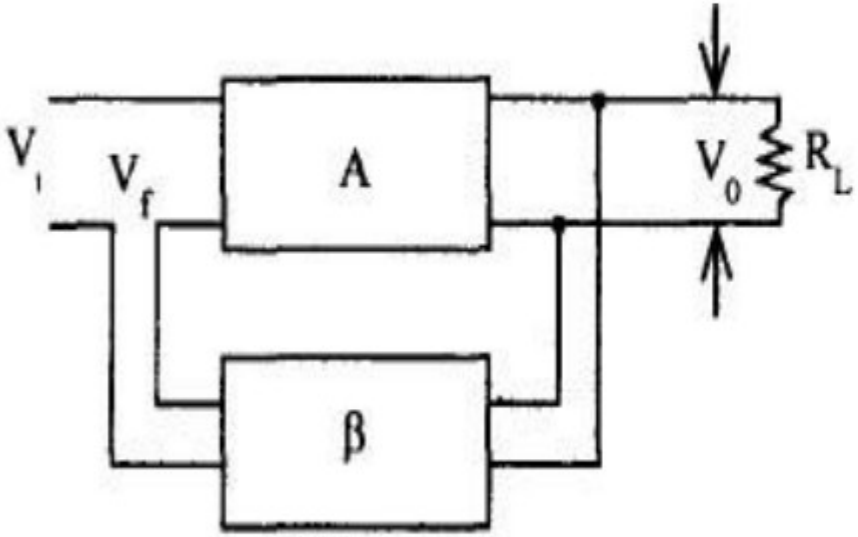

Voltage series feedback.

$$R_{if} = R_i\,/\,(1+A\beta)$$

$$R_{of} = R_o\,/\,(1+A\beta)$$

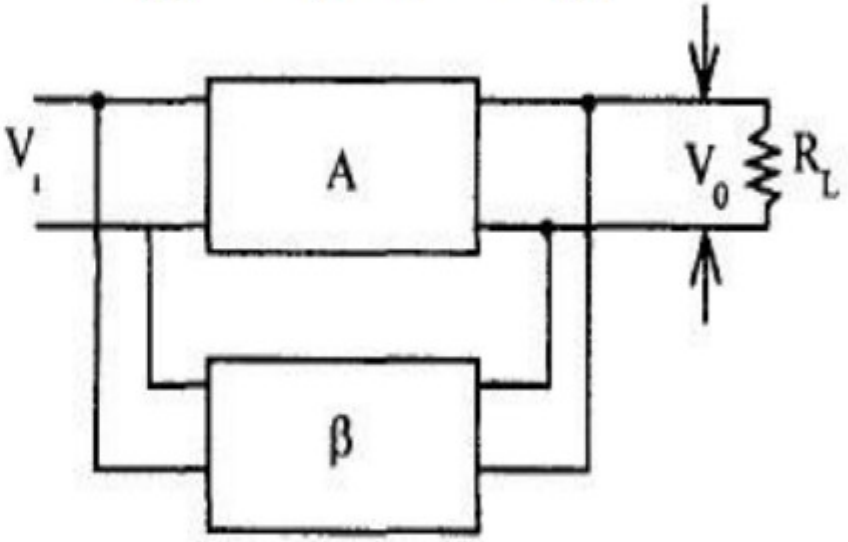

Voltage shunt Feedback

$$R_{if} = R_i / (1+A\beta)$$

$$R_{of} = R_o (1+A\beta)$$

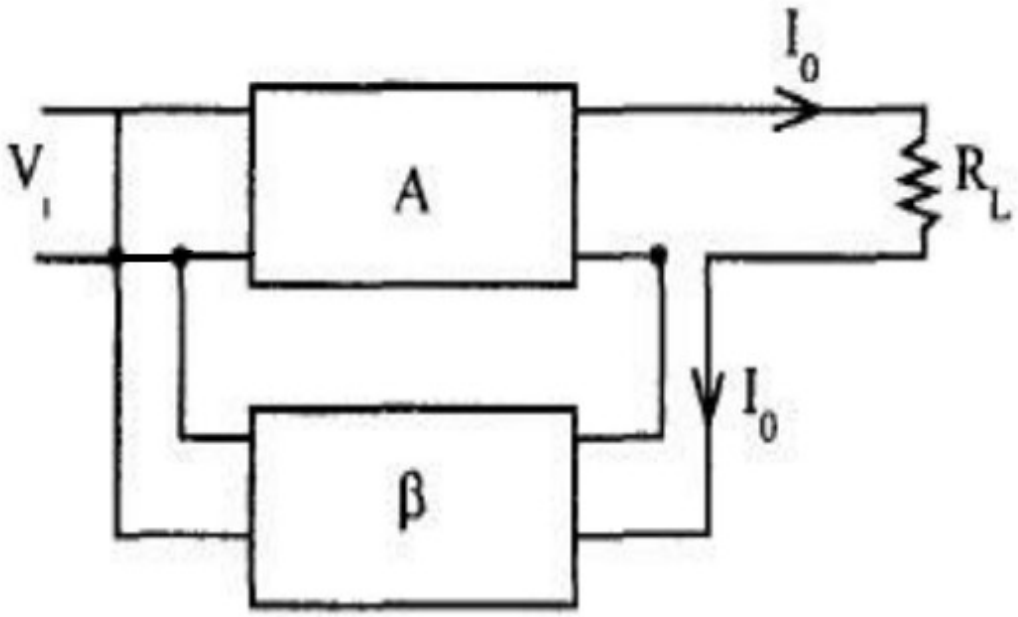

Current Shunt Feedback

$$R_{if} = R_i (1+A\beta)$$

$$R_{of} = R_o (1+A\beta)$$

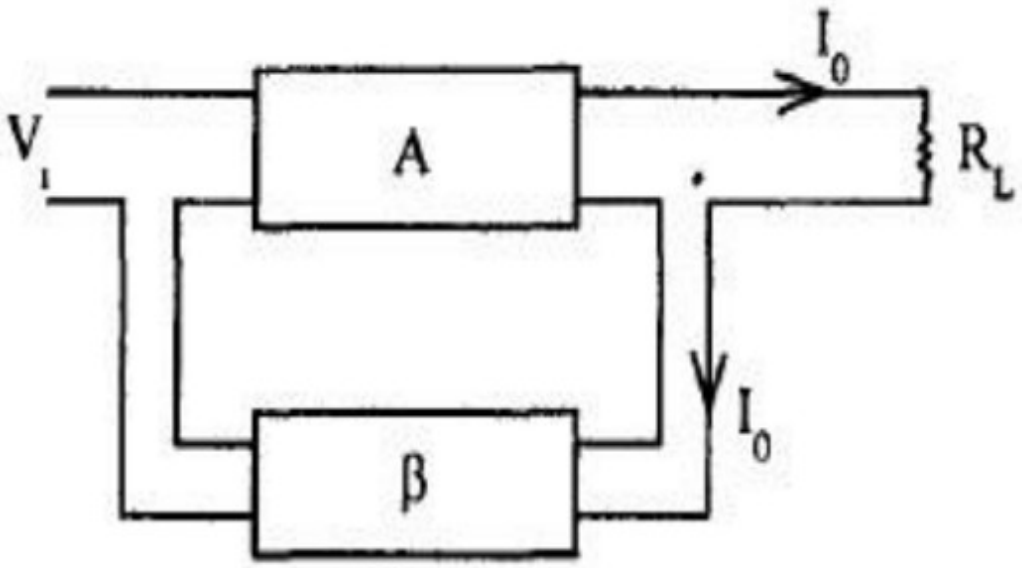

Current Series Feedback

Advantages of a negative feedback amplifier:

- It has highly stabilized gain--- circuit stability
- It has fewer harmonics distortion
- It has less frequency distortion
- Input-output impedances can be modified as desired
- It has less amplitude distortion
- Reduces Noise Level.
- Improves Frequency Response & Bandwidth.
- More Linear Operations.

PREPARED BY RAHU RAVINDRAN, ADHOC ASST. PROF. ECE, GCEK

Disadvantages of a negative feedback amplifier:

- Its reduction in gain
- It increases output resistance in the case of current shunt and current series feedback amplifiers
- It decreases input resistance in the case of voltage shunt and current shunt feedback amplifiers

Applications of –ve f/b

- In almost all electronic components
- In the regulated power supplies
- In wideband amplifiers

PREPARED BY RINJU RAVINDRAN, AD HOC ASST. PROF. ECE, GCEK

Op Amp circuits with voltage series feedback

- Schematic diagram of V series f/b ampr (non inverting ampr with f/b)

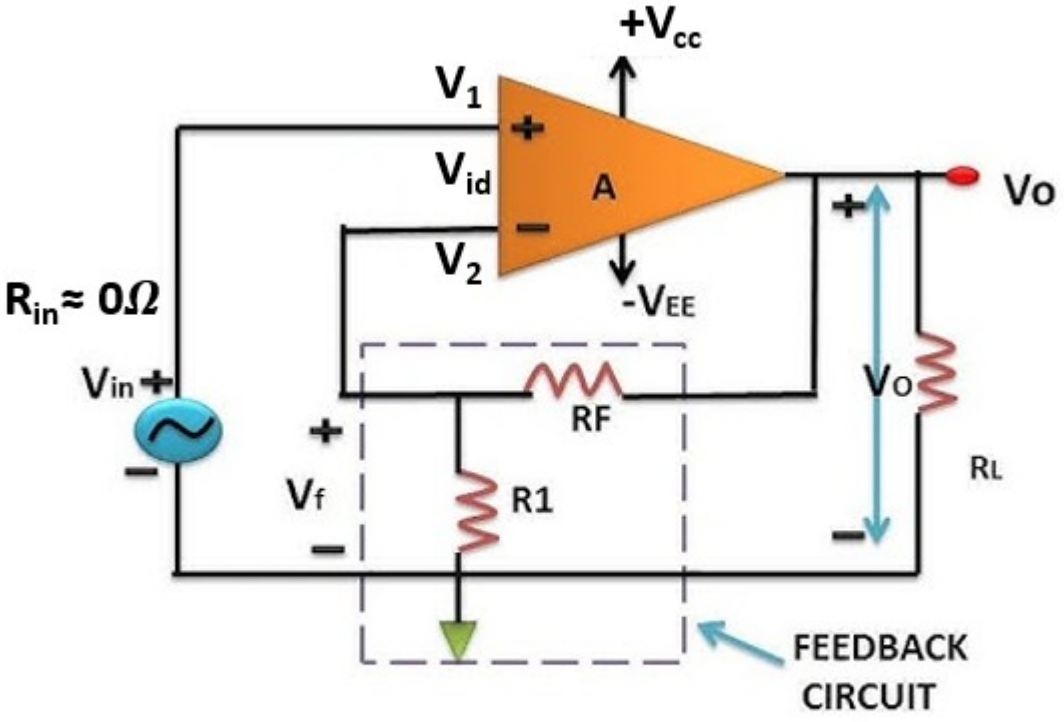

PREPARED
HOD ASST. PROF. ECE,

- f/b ckt composed of 2 resistors R_1 and R_F
- This is also called non inverting ampr with f/b or closed loop non inv ampr. Bcoz it uses f/b and the i/p is applied to non inv terminal i/p terminal of op amp.
- OL V gain (gain w/o f/b) -------- A =
- CL V gain (gain with f/b) -------- A_f=
- Gain of f/b ckt ------ β =

V_{in} ---- input voltage

V_f ------f/b voltage

V_{id} -----difference input Voltage

PREPARED BY RINJU RAVINDRAN, ADHOC ASST. PROF. ECE, GCEK

- $V_{id} = V_{in} - V_f$ ----------(1)
- Feedback voltage always opposes the input voltage (or is out of phase by 180 deg wrto input voltage) hence the feedback is negative.
- Analysis of voltage series f/b ampr : performed by computing closed loop v gain, input & o/p resistances and BW.

PREPARED BY RINJU RAVINDRAN, ADHOC ASST. PROF. ECE, GCEK

1.CLOSED LOOP VOLTAGE GAIN (A_f)

A_f=

$V_o=A(V_1-V_2)$

From fig. $V_1=V_{in}$

By Voltage division rule, ----- $V_2= V_f= V_o$

Therefore

$V_o=A(V_{in}- V_o)$

Rearranging, we get ---------- V_o=

PREPARED BY RINJU RAVINDRAN, ADHOC ASST. PROF. ECE, GCEK

- A_f= = (exact) ----------(2)

- generally A is very large . Typically

- Therefore »

- $_F \approx$

- A_f= = = 1+ (ideal) ----------(3)

So by adjusting the values of resistor R1 & RF we can get the required gain .

PREPARED BY BINJU RAVINDRAN, ADHOC ASST. PROF. ECE, GCEK

- $\beta = \quad =$ ----------(4)

- comparing (3) & (4)

  $A_f =$ (ideal) ---------(5)

PREPARED BY RINJU RAVINDRAN, ADHOC ASST. PROF. ECE, GCEK

From eqn (2) $A_f = \; = \;$ (exact)

- Rearranging eqn 2

- $A_f =$

- **$A_f =$ ---------- (6)**

- **Aβ** is the loop gain

PREPARED BY BINJU RAVINDRAN, ADHOC ASST. PROF. ECE, GCEK

Block diagram representation of non inverting ampr with f/b.

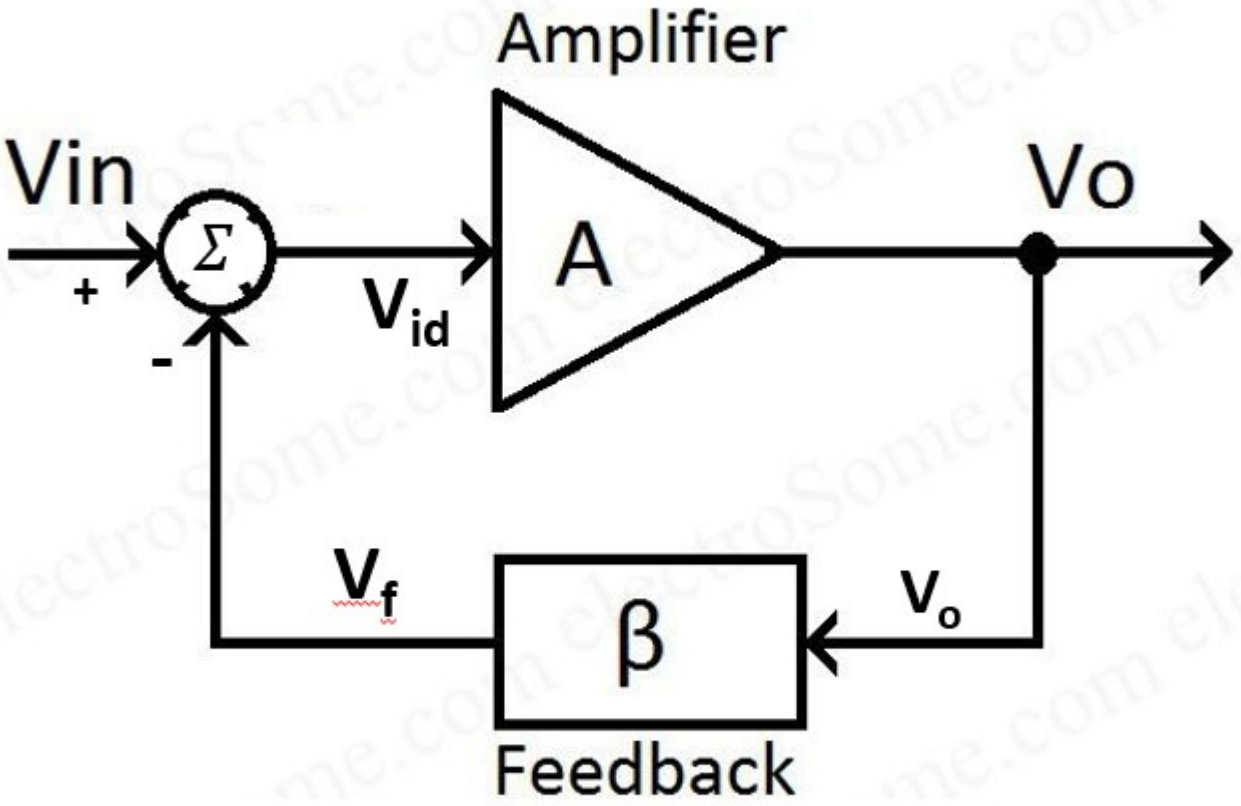

PREPARED BY ASST. PROF. ECE,

- OL V gain (gain w/o f/b) -------- A =
- =
- Ideal case: since A is very large , ≈ 0
- That is v1 $\approx$ v2 (ideal)
- V1 = V_{in}
- V2=V_f = V_0
- So V_{in}= V_0
- A_f= = = 1+ (ideal)

PREPARED BY BINJU RAVINDRAN, ADHOC ASST. PROF. ECE, GCEK

2. INPUT RESISTANCE WITH FEEDBACK

Equivalent ckt of a voltage series feedback ampr with the op amp

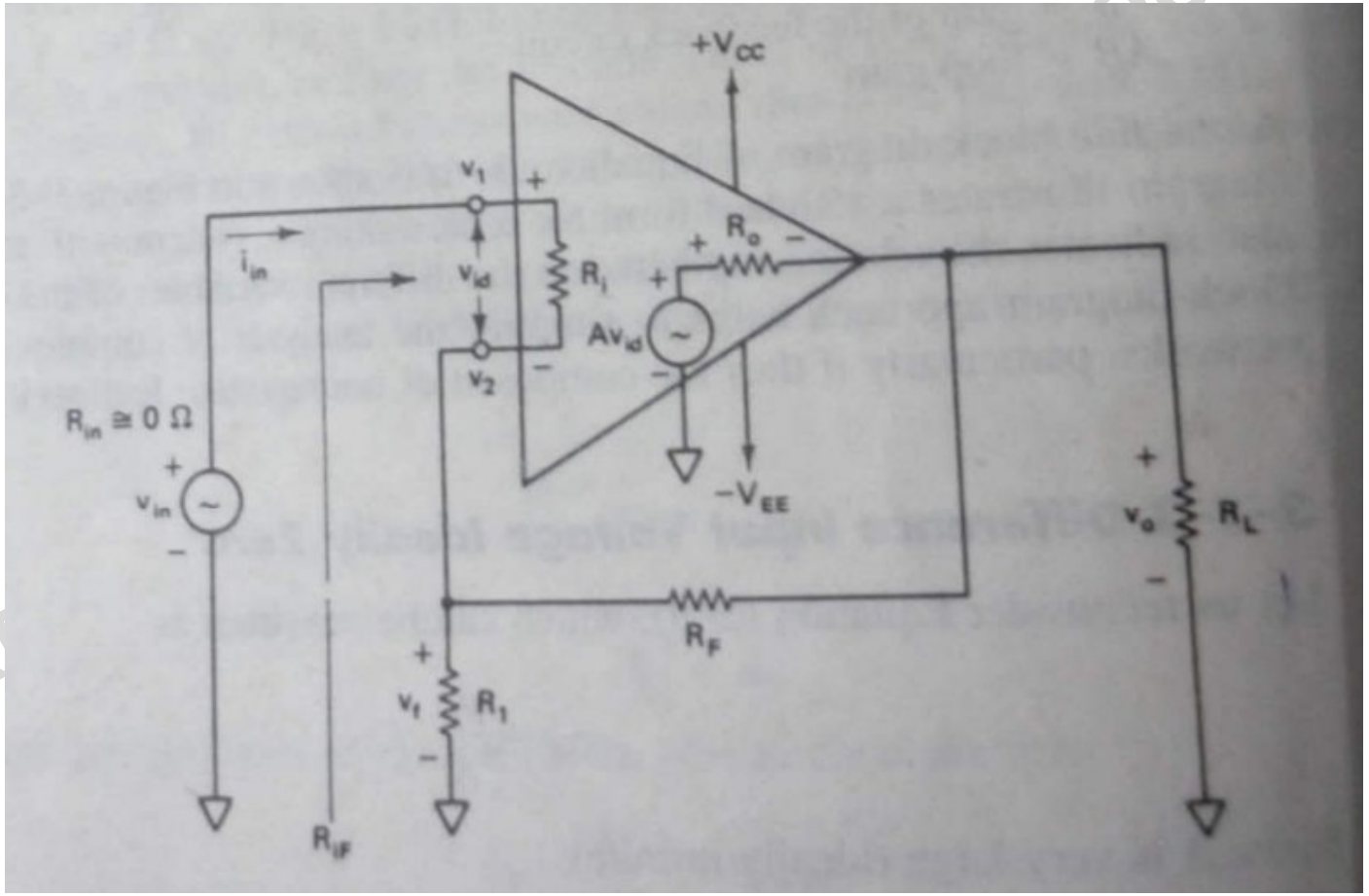

PREPARED BY ASSOC ASST. PROF. ECE,

- R_i : open loop input res of op amp (w/o f/b)
- R_{iF}: closed loop input res of op amp (with f/b)

- $R_{iF} =$ =
- But $v_{id} = V_o / A$ and $V_o = V_{in}$
- Therefore

$R_{iF} = R_i$ $= AR_i$ $= AR_i$ $= R_i$ ()

$$R_{iF} = R_i \ ()$$

Input res of op amp with f/b (V series f/b) is () times that w/o feedback.

PREPARED BY RANIU RAVINDRAN, ADHOC ASST. PROF. ECE, GCEK

3.OUTPUT RESISTANCE WITH FEEDBACK

- Output res is the res determined looking back into feedback ampr from the o/p terminal as shown in fig.

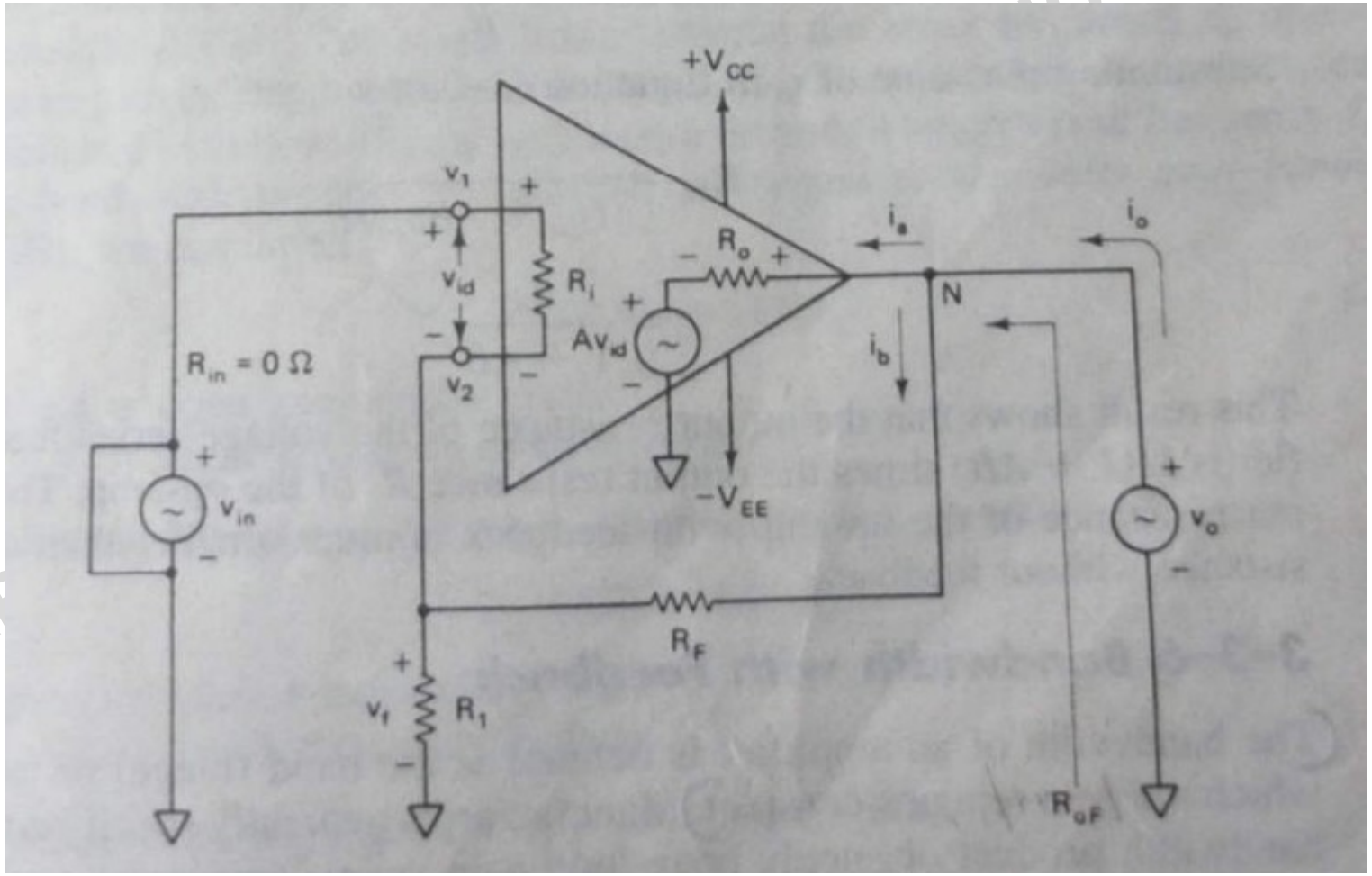

PREPAR
ASST. PROF. ECE,

- Res can be found by using Thevenin's theorem for dependent sources.
- To find o/p res with f/b R_{oF} , reduce indep sources V_{in} to 0, apply an external voltage V_o and then calculate the resulting current

$$R_{oF} =$$

- Writing KCL at o/p node N,

Since $[(R_i \mid\mid R_1) + R_F] >> R_o$ and as R_0 is very small we have

Therefore

- KVL at o/p loop

$$V_o - R_o - AV_{id} = 0$$

PREPARED BY RINJU RAVINDRAN, ADHOC ASST. PROF. ECE, GCEK

- $V_{id} = V1 - V2$

We have $V1=0$ & $V2=V_f$

- $V_{id} = 0 - V_o = -\beta V_o$

- Therefore = =
- Substituting in R_{oF} =

we get **R_{oF} =**

Output res of V series f/b ampr is 1/ () times the o/p res R_o of op amp.

o/p res of op amp with –ve f/b is much smaller than o/p res w/o f/b.

PREPARED BY PINJU RAVINDRAN, ADHOC ASST. PROF. ECE, GCEK

4.BANDWIDTH WITH FEEDBACK

- BW of an ampr is the range (band) of freqs for which the gain remains constant.
- Manufacturers generally specify either gain BW pdt or supply open loop gain vs freq curve for the op amp.
- For 741 op amp, the latter is typical.

PREPARED BY RINJU RAVINDRAN, ADHOC ASST. PROF. ECE, SCEK

Open loop gain vs freq curve of the 741 IC

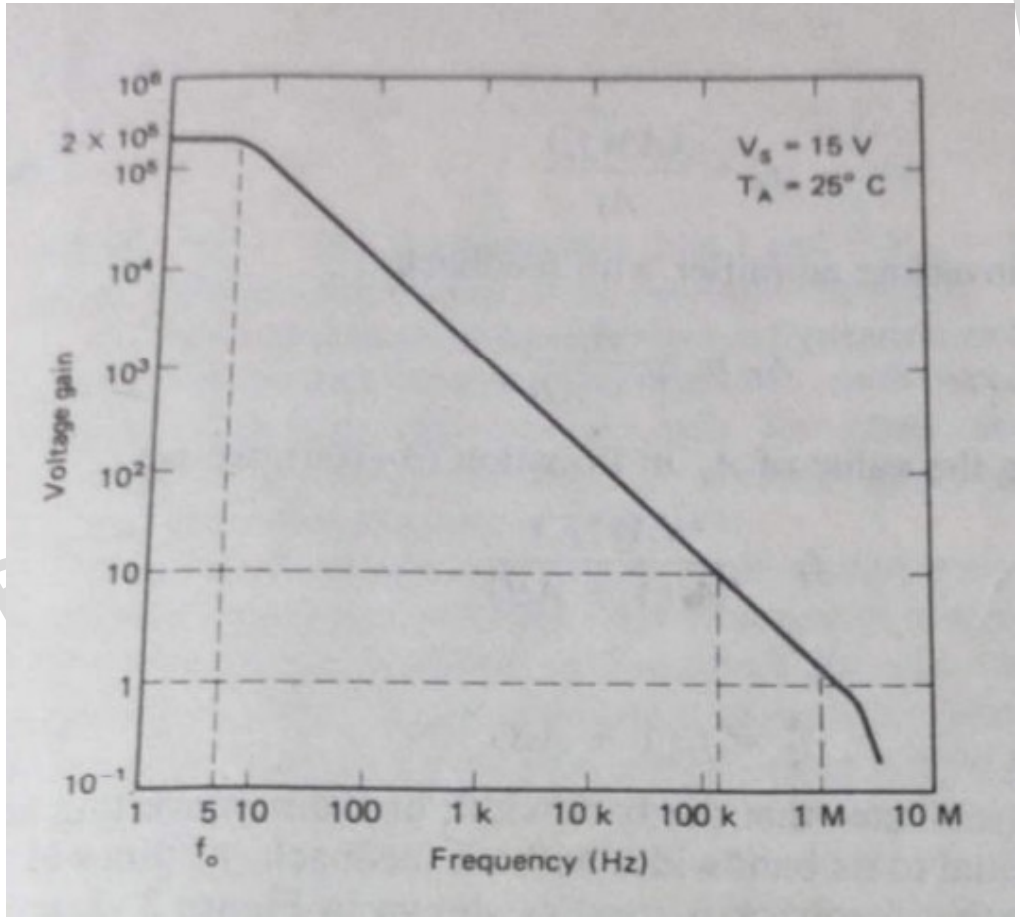

PREPARED BY ASST. PROF. ECE,

- From this fig, for a gain of 2* , the BW is approx. 5 Hz

  GBW = 2 5 = 1MHz

- On extreme end, BW =1 MHz, gain =1

  GBW=1MHz * 1 = 1MHz

- GBW is constant

This holds true only for op amps like 741 that have just 1 break freq below unity gain BW.

- For 741, 5Hz is the break freq (f_o). The freq at which gain A is 3dB down from its value at 0 Hz.
- Freq at which gain equals 1 is called unity gain BW(UGB).
- Since for an op amp with single break freq, GBW is constant and equal to UGB,

PREPARED BY BINJU RAVINDRAN, ADHOC ASST. PROF. ECE, GCEK

- UGB = $A*f_o$

  where A is OL voltage gain

  f_o is break freq of an op amp

- Only for a single break freq op amp,

UGB = $A_F * f_F$

where A_F is CL voltage gain

f_F is bandwidth with feedback

Equating both eqns, we get

= $A_F * f_F$

f_F =

For a non inv ampr, we have **A_f =**

PREPARED BY MINJU RAVINDRAN, ADHOC ASST. PROF. ECE, GCEK

- Therefore $f_F = (1+A\beta)$
- **BW of non inv ampr with negative feedback is $(1+A\beta)$ times its BW w/o feedback.**

$$f_F =$$

PREPARED BY RINJU RAVINDRAN, ADHOC ASST. PROF. ECE, GCEK

5.TOTAL O/P OFFSET VOLATGE WITH FEEDBACK

- In an op amp, when i/p is 0, o/p is also expected to be 0.
- However bcoz of effect of i/p offset voltage and current, o/p is significantly large. This enhanced o/p voltage is called as total o/p offset voltage (V_{ooT}).
- In an OL op amp, V_{ooT} is equal to either the +ve or –ve saturation voltage. Saturation voltages are specified in data sheet as o/p voltage swing.
- Since with f/b, non inverting ampr gain changes from A to , V_{ooT} with f/b must also be times the voltage w/o feedback.

PREPARED BY RAHUL RAVINDRAN, ADHOC ASST. PROF. ECE, GCEK

- Total o/p offset V with f/b =
- **V_{ooT} =**
- Where is always < 1 and ± V_{sat} = saturation voltages, max voltages the o/p of an op amp can reach.
- In an OL configuration, even a very small voltage at the i/p of an op amp can cause the o/p to reach max value(+V_{sat} or –V_{sat}) bcoz of its very high V gain.
- So from above eqn V_{ooT} can be either + or – voltage as V_{sat} can be either + or - .

PREPARED BY RAJU RAVINDRAN, AD HOC ASST. PROF. ECE, GCEK

- -ve f/b can also be used to reduce significantly the effect of noise variations in supply voltages and changes in temp on the o/p V of a non inv ampr.
- Higher the value of (1+Aβ), the smaller is the effect of noise and variations in supply voltages and changes in temp on the o/p V of a non inv ampr.
- From this analysis it is clear that non inv ampr with negative f/b exhibits the characteristics of perfect Voltage follower. That is it has very high i/p res, very low o/p res, stable V gain, large BW and very little (ideally 0) o/p offset voltage.

PREPARED BY RENJU RAVINDRAN, ADHOC ASST. PROF. ECE, GCEK

Special case of non-inverting ampr with f/b

- Voltage follower

PREPARED BY RINJU RAVINDRAN, ADHOC ASST. PROF. ECE, GCEK

VOLTAGE FOLLOWER

- Lowest gain that can be achieved from a non inv ampr with f/b is 1.
- When the non inv ampr is configured for a unity gain, it is called as voltage follower bcoz o/p V is equal to and in phase with i/p.
- o/p follows the i/p.
- It is preferred bcoz it has higher i/p res and o/p amplitude is exactly = i/p.
- To obtain V follower from non inv ampr with f/b, simply open R_1 and short R_F.

PREPARED BY RINJU RAVINDRAN, ADHOC ASST. PROF. ECE, GCEK

Here all o/p V is fed back to the inv terminal of op amp. Consequently gain of f/b ckt is unity

$\beta = A_F = 1$

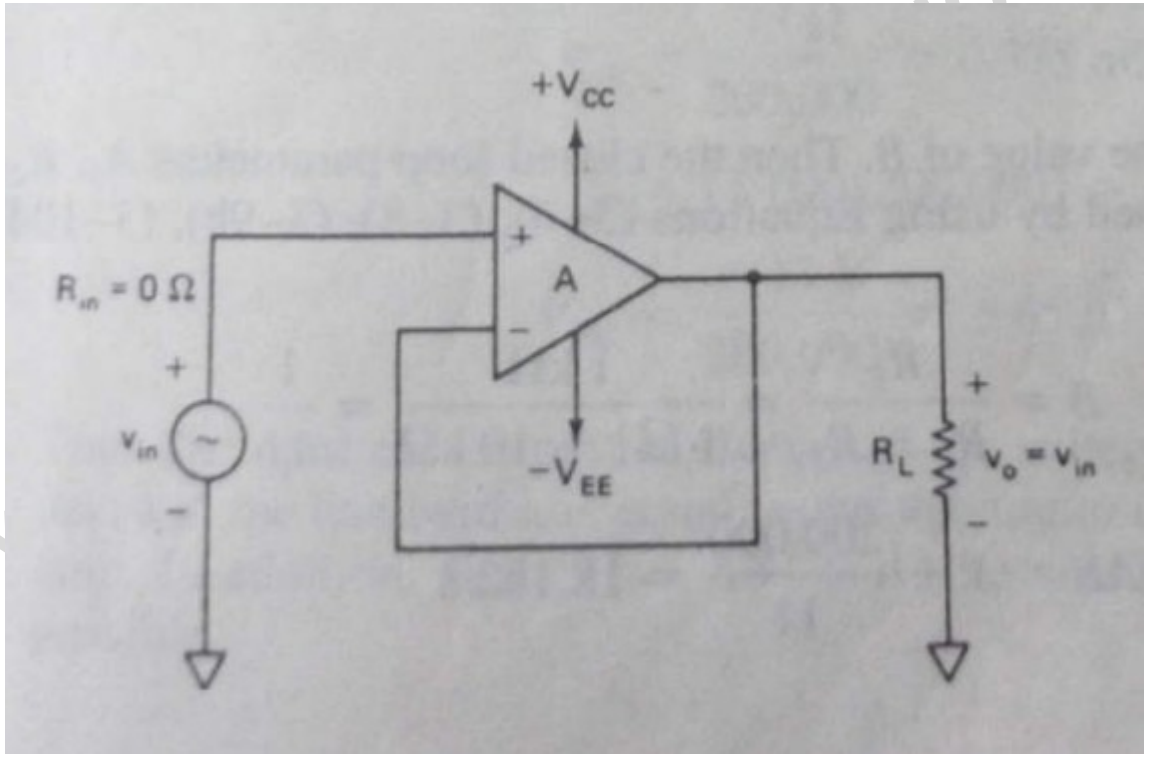

Fig : Voltage follower

PREPARED BY ... ASST. PROF. ECE

- Since V follower is a special case of non inv ampr, the eqns are applicable as follows

$\beta = A_F = 1$

$R_{iF} = A\ R_i$ since $(1+A) \approx A$

$R_{oF} =$

$f_F = A\ f_o$

$V_{ooT} =$

Voltage follower is also called as a **non inverting buffer** bcoz when placed btw 2 networks , it removes the loading on the first network.

PREPARED BY RINJU RAVINDRAN, ADHOC ASST. PROF. ECE, GCEK

PROBLEMS

PREPARED BY RINJU RAVINDRAN ADHOC ASST. PROF. ECE, GCEK

Op Amp circuits with voltage shunt feedback

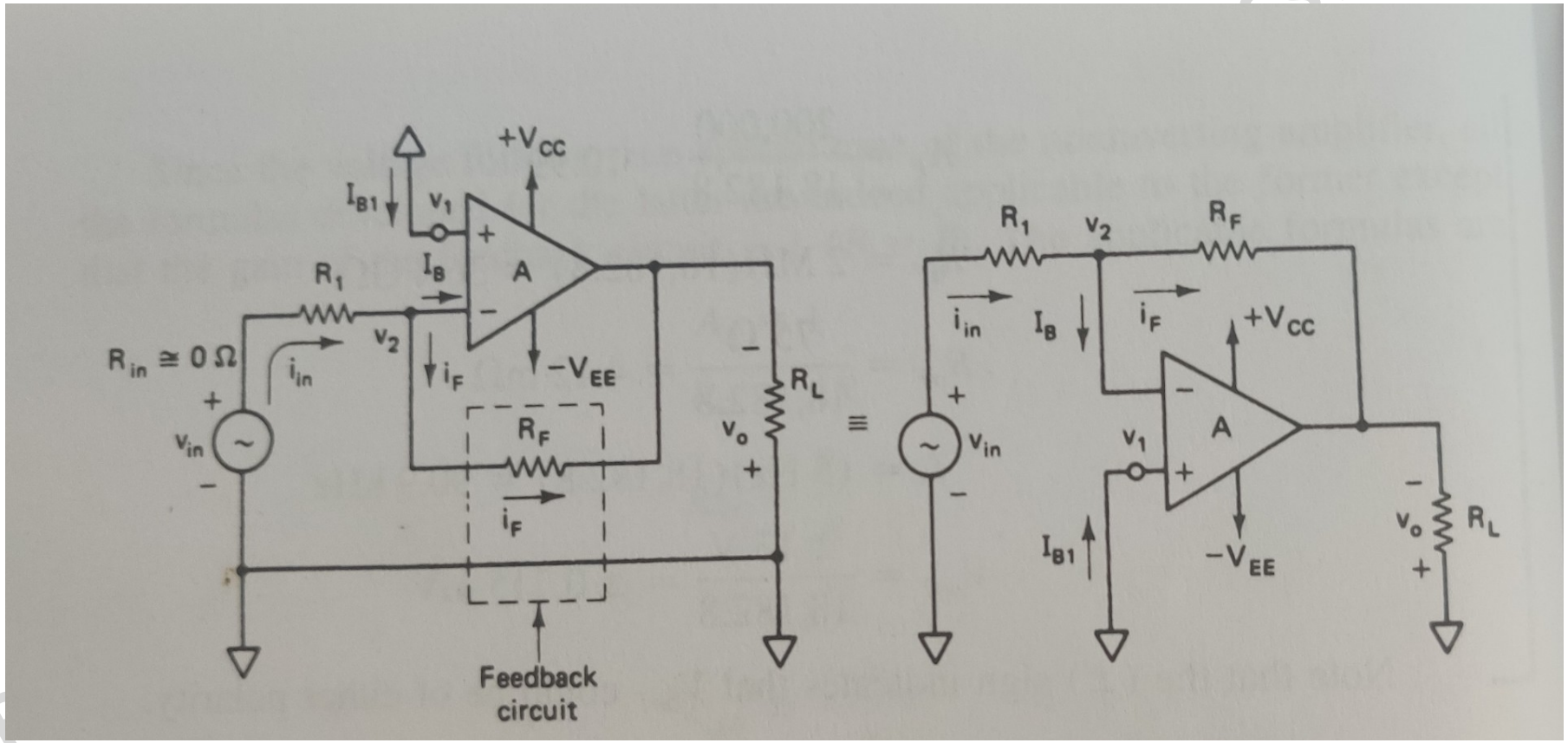

Fig: Voltage shunt f/b ampr using an op amp(or inverting ampr with f/b).

PREP... ST. PROF. ECE,

- The i/p voltage drives the inverting terminal
- Amplified as well as inverted o/p signal is also applied to inv terminal via feedback res R_F .
- This arrangement forms a negative feedback bcoz any increase in the o/p signal results in a f/b signal into the inverting i/p causing a decrease in the o/p signal.
- Non inv terminal is grounded and f/b ckt has only 1 res R_F .
- An extra res R_1 is connected in series with i/p signal source V_{in}.

PREPARED BY RINJU RAVINDRAN, AD HOC ASST. PROF. ECE, GCEK

1.CLOSED LOOP VOLTAGE GAIN

- KCL at i/p node V_2

Since R_i is very large, the i/p bias current is negligibly small.

----------(7)

$V_o=A(V_1-V_2)$

Since $V_1=0$ -------- $V_o=-AV_2$

$V_2=-V_o/A$

PREPARED BY RINJU RAVINDRAN, ADHOC ASST. PROF. ECE, GCEK

- Substituting V_2 in (7)

A_F = = (exact) ----------(8)

-ve sign indicates that o/p and i/p are out of phase by 180 deg. Bcoz of this phase inversion, this config is called as inverting ampr with feedback.

- since A is very lage (ideally ∞), >> $_F$
- So eqn (8) becomes **A_F = =** (ideal) ----------(9)

PREPARED BY RINJU RAVINDRAN, ADHOC ASST. PROF. ECE, GCEK

- Divide both numerator and denominator of eqn (8) by (R_1+R_F)
- A_F = = = =
- **A_F = ----------(10)**

K = voltage attenuation factor

= gain of f/b ckt

Comparing (6) & (10), in addition to phase inversion(-ve sign), CL gain of inverting ampr is K times the CL gain of non inverting ampr, where K<1

PREPARED BY RENJU RAVINDRAN, ADHOC ASST. PROF. ECE, GCEK

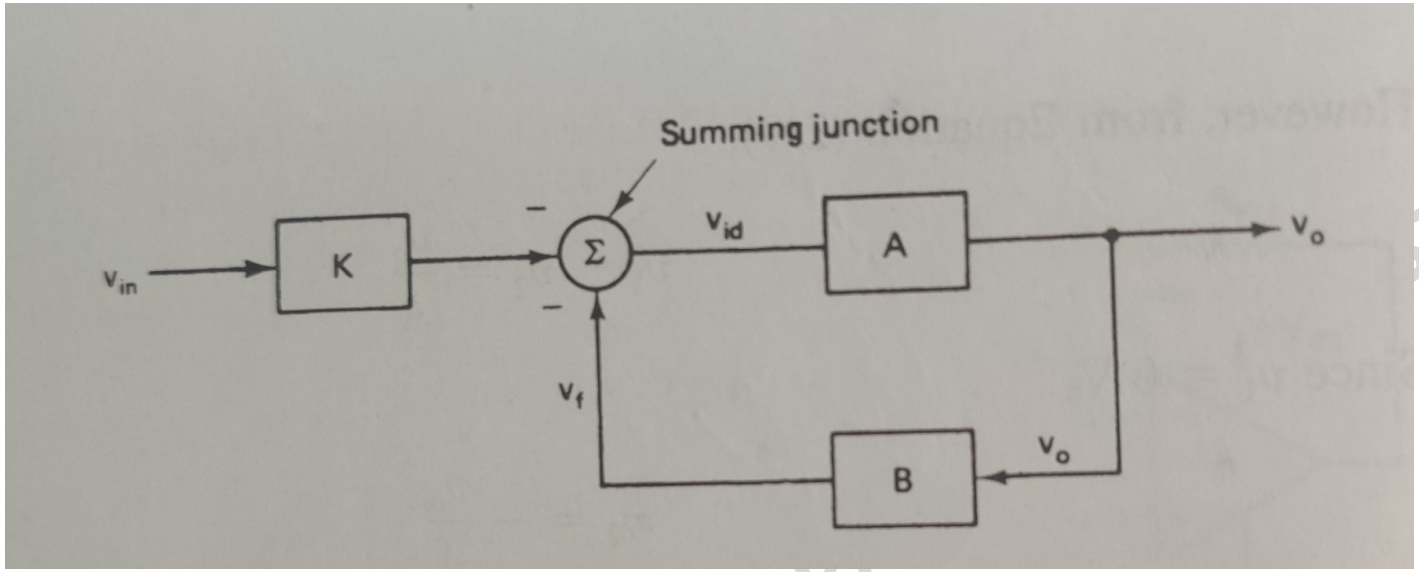

- Block diagram of inverting ampr with f/b using a voltage summing junction as a model for current summing

To derive the ideal CL gain, we can use (10) as follows

If Aβ>>1 -------- (1+Aβ)≈ Aβ

A_F = = ----------(11)

PREPARED BY MINJU RAVINDRA ASST. PROF. ECE, GCEK

Inverting input terminal at virtual ground

- **Concept of virtual ground:**

If any one of the input terminals of an op amp is grounded physically, the other i/p terminal will also be at ground potential, even though it is not grounded physically.

This is called as virtual ground concept in op amps.

i.e. differential i/p V in an op amp is ideally 0.

$V_o = Av_{id}$ $\qquad$ $V_{id} = V_o/A$

Since A is very large (ideally infinite), $V_{id} \approx 0$ and $V_{id} = V_1 - V_2$

That means $V_1 = V_2$ (ideal)

V at non inv i/p terminal of an op amp = V at inv i/p terminal of an op amp

(provided A is very large)

PREPARED BY RINJU RAVINDRAN, ADHOC ASST. PROF. ECE, GCEK

- So from the fig. of inv ampr with f/b

As V_1 is at grnd --- V_2 is approx. at grnd potential (by virtual grnd concept)

We have

----------(7)

$V_1 = V_2 = 0V$

$A_F = \ = \quad$ same result as in eqn (11)

PREPARED BY RINJU RAVINDRAN, ADHOC ASST. PROF. ECE, GCEK

2. INPUT RESISTANCE WITH FEEDBACK

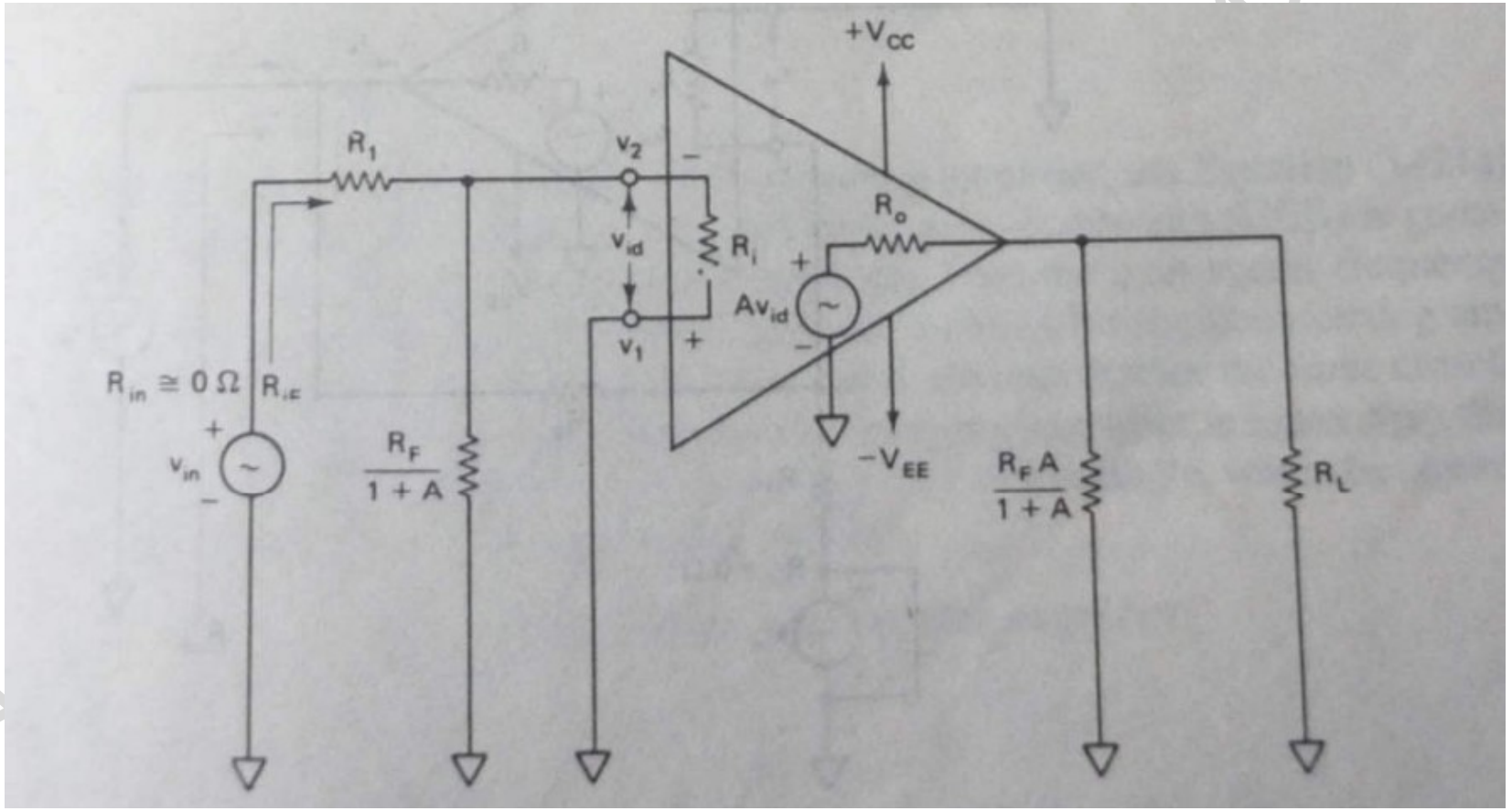

Fig: Inverting ampr with Millerized feeback resistor.

PREPA ASST. PROF. ECE,

Miller theorem applied to op amp

- The inverting op-amp configuration has a resistor connected from output to inverting input in Fig.(a)

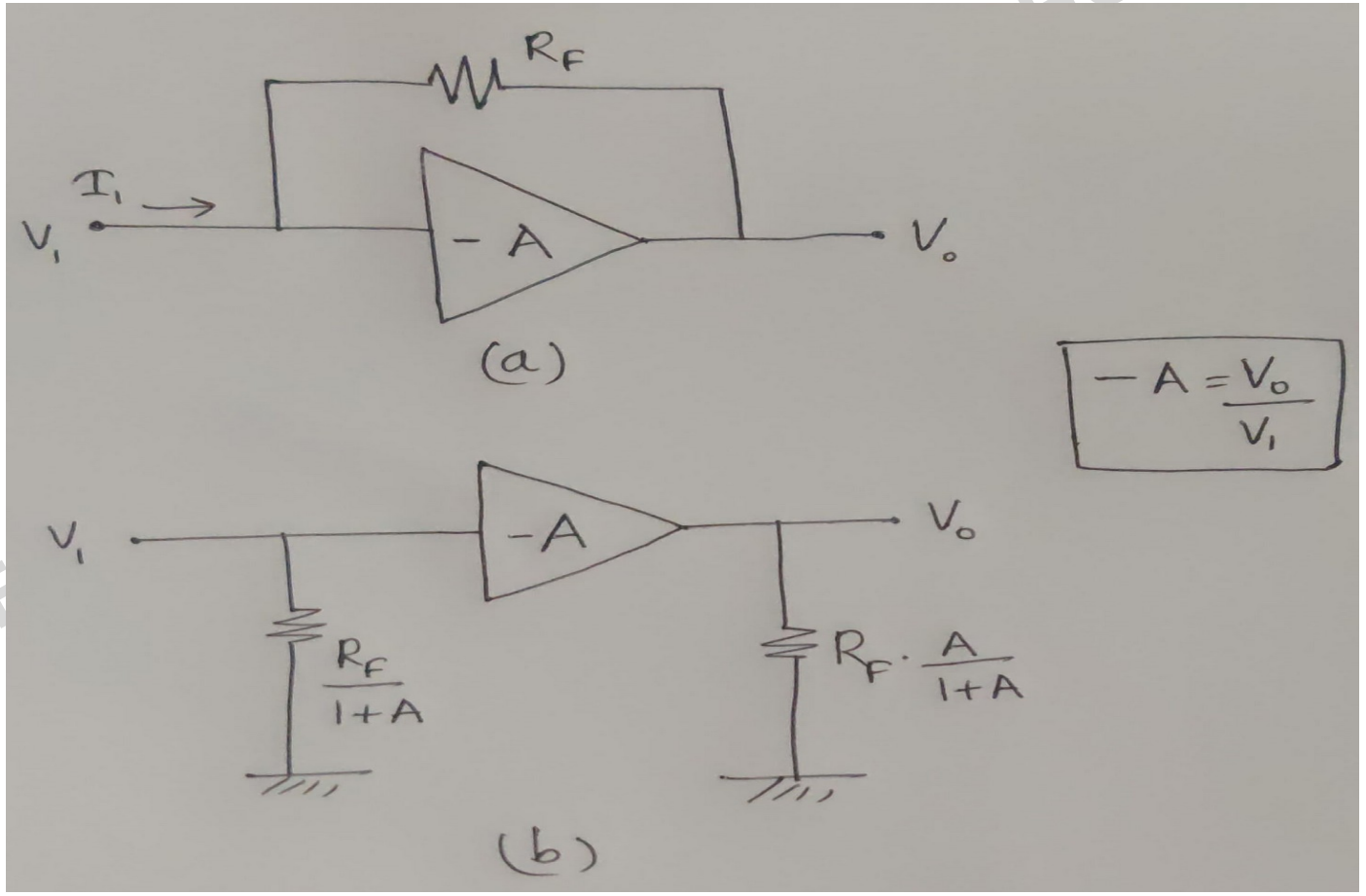

PREPARED BY HOC ASST. PROF. ECE,

- In Fig.(b), the inverting voltage amplifier has a gain of –*A* with input quantities of v_1 and I_1 . The output voltage is v_o . The equivalent input resistance can be found as follows. First, by definition of op-amp open-loop voltage gain, –A,

$$V_o=-AV_1$$

At the i/p node apply KCL,

$= I_1$

$= (1+A) = I_1$

Eqvt input resistance

$$R_{in} = \ =$$

PREPARED BY RANJU RAVINDRAN, ADHOC ASST. PROF. ECE, GCEK

For an amplifier with output resistance, the equivalent shunt contribution from R_F is

- R_{out} = =
- **R_{out} = = A R_{in}**

- The equivalent circuit resulting from Miller's theorem is shown above in (b). The circuit has been converted by the *Miller transform* to an equivalent circuit that does not have an input-output bridging resistance.

PREPARED BY RENJU RAVINDRAN, ADHOC ASST. PROF. ECE, GCEK

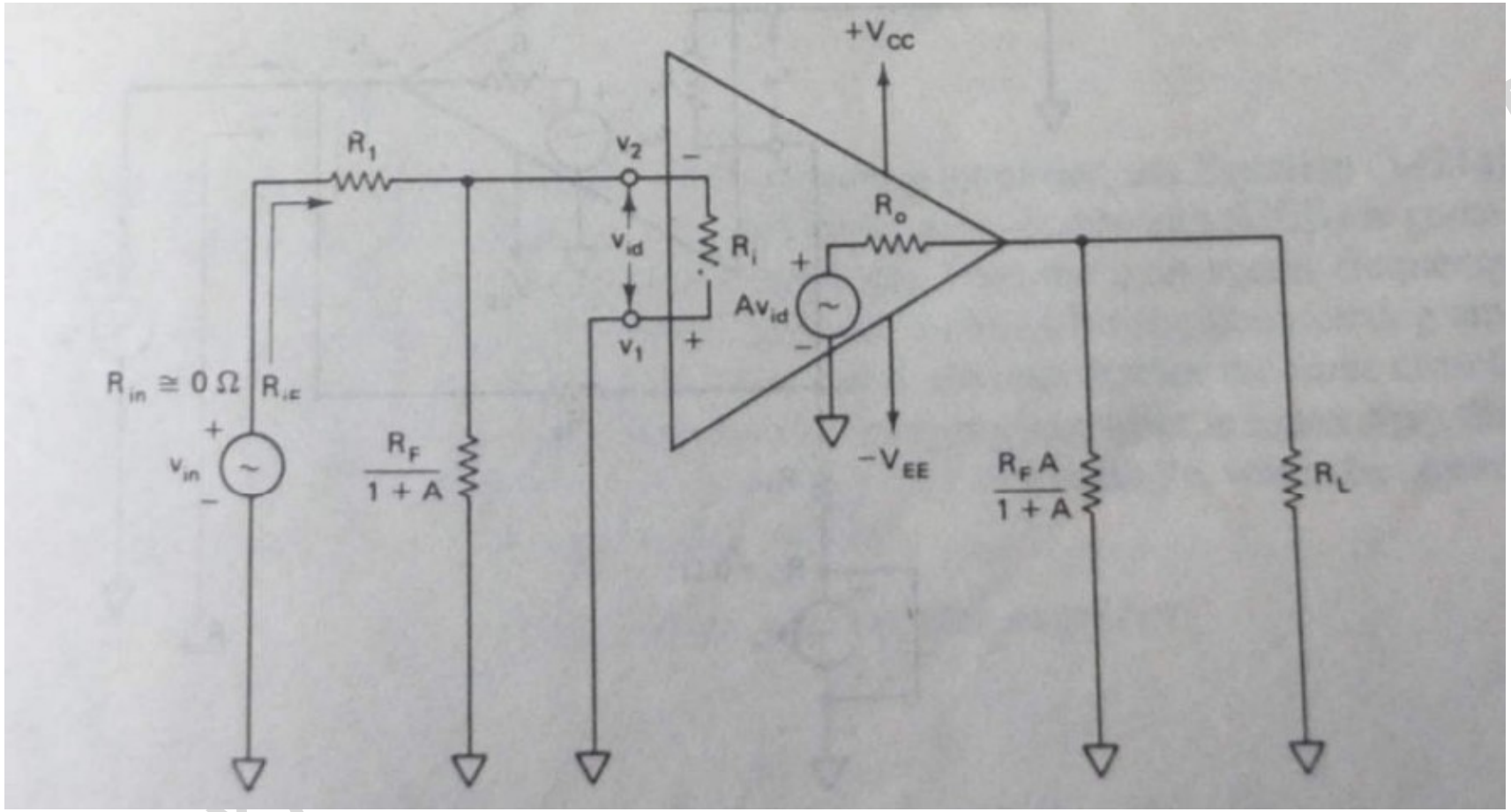

Easiest method of finding i/p res is to millerize the f/b res R_F. Split R_F into 2 miller components as shown in fig.

PREPARED BY ... F. ECE,

- Input res **$R_{iF} = R_1 + [\ \|\ \|\ R_i\ ]$ (exact) ---------(12)**
- Since R_i and A are very large, $\|\ \|\ R_i \approx 0$
- Hence **$R_{iF} = R_1$ (ideal) ---------(13)**

PREPARED BY RINJU RAVINDRAN, ADHOC ASST. PROF. ECE, GCEK

3.OUTPUT RESISTANCE WITH FEEDBACK

- R_{OF} is the res measured at the o/p terminal of the f/b ampr.
- Found using the Thevenin's eqvt ckt. It is exactly same as that of non inv ampr bcoz o/p res of inv ampr must be identical to that of non inv ampr.
- **R_{oF} = ----------(14)**

PREPARED BY RINJU RAVINDRAN, ADHOC ASST. PROF. ECE, GCEK

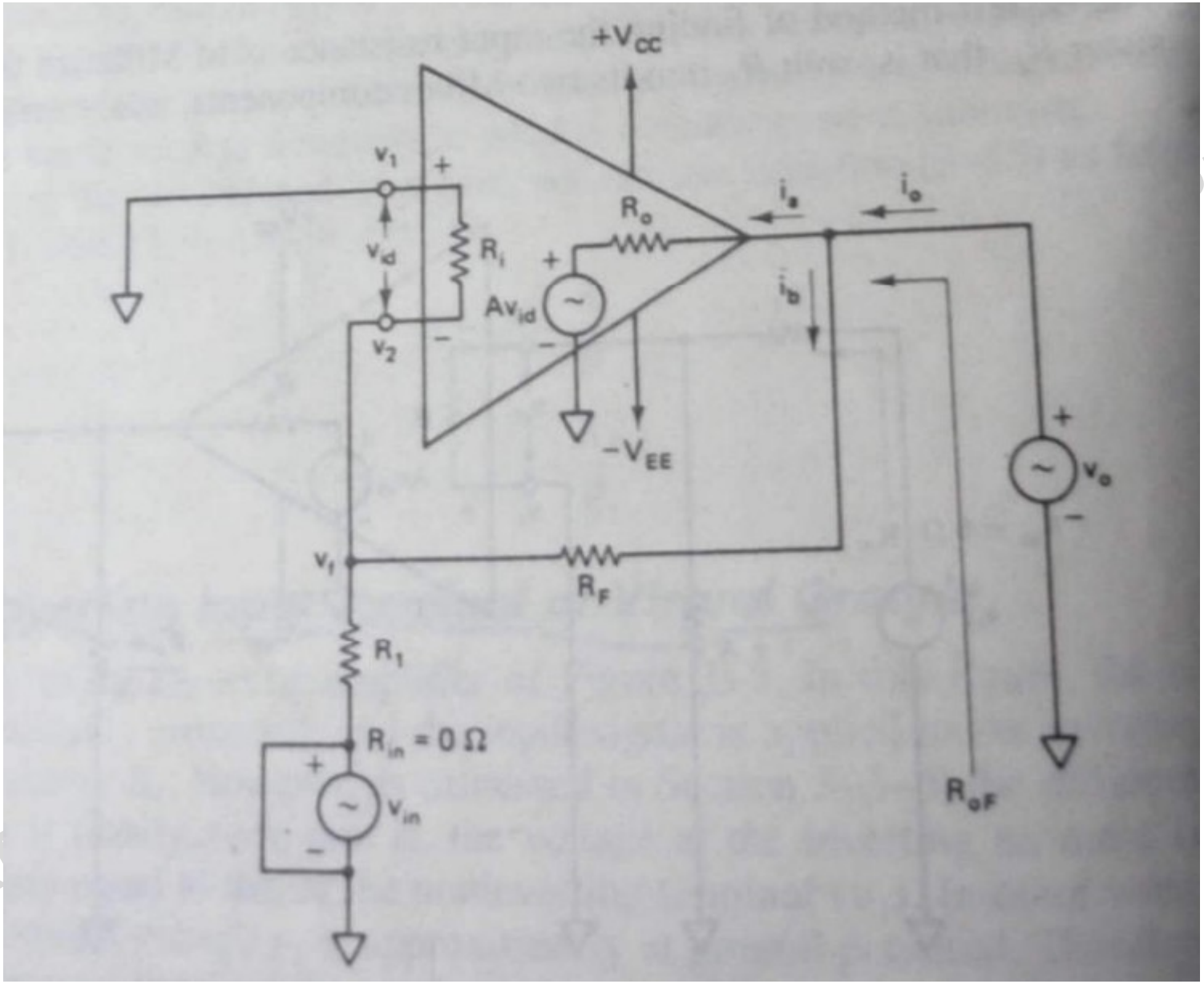

Fig: Thevenin's eqvt ckt for R_{oF} of the inverting ampr

PREPARED BY PROF. ECE,

4.BW WITH FEEDBACK

- GBW pdt of a single break freq op amp is always constant.
- Gain of ampr with f/b is always < gain w/o f/b.
- Therefore BW of ampr with f/b (f_F) must be > BW of ampr w/o f/b (f_o)

$$f_F = f_o (1+A\beta) \text{ ---------- } (15)$$

- f_o = break freq of op amp

  = {true only for single break freq op amp such as 741}

Substituting this in eqn (15), we get

$f_F = (1+A\beta)$

PREPARED BY RINJU RAVINDRAN ADHOC ASST. PROF. ECE, GCEK

- $f_F = (1+A\beta)$
- **$f_F = K$ ----------(16)**
- Where K =
- $A_F =$
- For the same CL gain, CL BW for inverting ampr is lower than that of non inv ampr by a factor of K (K<1)
- When CL gain = 1 , BW will be
- f_F= UGB for non inv ampr &
- $f_F =$ for inv ampr if $R_1 = R_F$

PREPARED BY RENIU RAVINDRAN, ADHOC ASST. PROF. ECE, GCEK

- As A_F approaches A, the diff btw non inv and inv ampr BW approaches 0.
- As an extreme limit, when $K \approx 1$, value of f_F for both inv and non inv ampr is approx. same.

PREPARED BY RINJU RAVINDRAN, ADHOC ASST. PROF. ECE, GCEK

5.TOTAL OUTPUT OFFSET VOLTAGE WITH FEEDBACK

- When the temperature & power supplies are fixed, o/p offset voltage is a function of gain of op amp.
- We know that $A_F < A$
- Therefore V_{ooT} must always be smaller than that w/o f/b.
- Total o/p offset V with f/b =
- **V_{ooT} =**
- $\pm V_{sat}$ = saturation voltages

PREPARED BY RINJU PAVINDRAN, AD HOC ASST. PROF. ECE, GCEK

- Gain of f/b ckt β =
- o/p V of op amp w/o f/b can be $+V_{sat}$ or $-V_{sat}$ bcoz of its very high V gain A.

PREPARED BY RINJU RAVINDRAN, ADHOC ASST. PROF. ECE, GCEK

Special cases of inverting ampr with f/b

- 1. Current to voltage converter
- 2. Inverter.

PREPARED BY RINJU RAVINDRAN, ADHOC ASST. PROF. ECE, GCEK

1. CURRENT TO VOLTAGE CONVERTER

- Ideal v gain of inverting amp

From eqn(9) ---------- A_F = = (ideal)

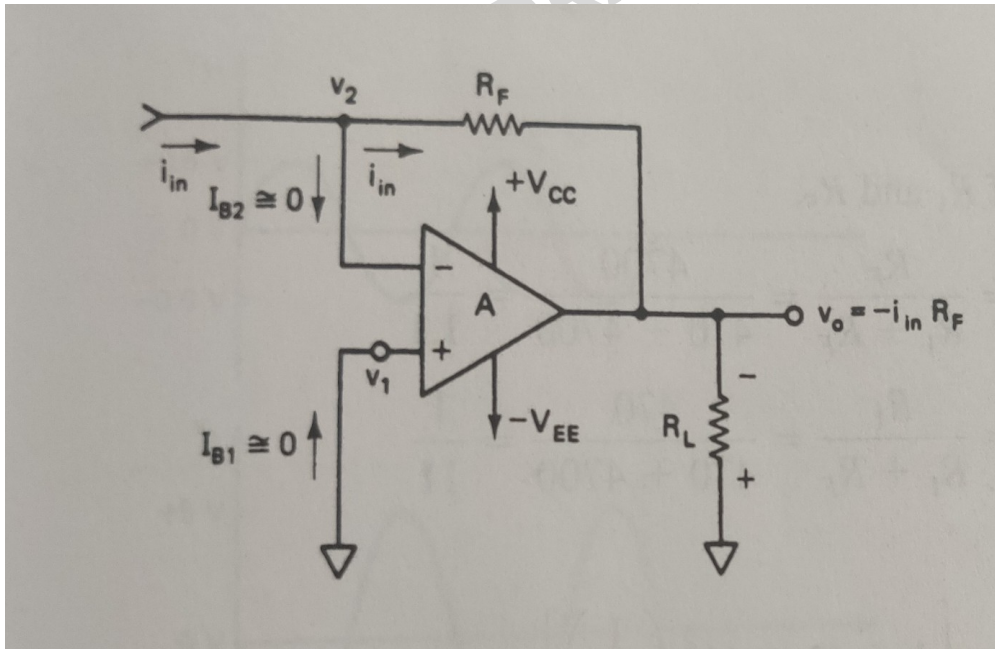

Fig: current to voltage converter.

PREPARED BY ORAN, ADHOC ASST. PROF, ECE,

- $V_o = R_F$

- Since $V_1=0$ and $V_1=V_2$
- $V_{in}/R_1 = i_{in}$
- $= i_{in}$
- **$V_o = - i_{in} R_F$ ---------- (17)**
- That is if we replace V_{in} and R_1 by a current soure i_{in} as shown in fig., o/p voltage V_o becomes proportional to i/p current i_{in}.
- that is, the ckt converts i/p current into a proportional o/p voltage.
- Application : used in sensing current from photodetectors, in digital to analog converter applications.

PREPARED BY BINJU RAVINDRAN, ADHOC ASST. PROF. ECE, GCEK

2.INVERTER

- If we need an output s/g equal in magnitude but opp in phase to that of i/p s/g, we use inverter.
- The inverting amplifier ckt works as an inverter if $R_1 = R_F$.
- All the eqns for inverting ampr are applicable here.
- Here β = =
- (1+Aβ) = (1+)
- The eqns can be applied by merely substituting () for (1+Aβ) since β=1/2.

PREPARED BY RINJU RAVINDRAN, AD HOC ASST. PROF. ECE, GCEK

TABLE 3–1 Summary of Results Obtained for Noninverting and Inverting Amplifiers

Parameter	*Noninverting amplifier*	*Inverting amplifier*
1. Voltage gain	$A_F = \dfrac{A(R_1 + R_F)}{R_1 + R_F + AR_1}$ (exact)	$A_F = \dfrac{-AR_F}{R_1 + R_F + AR_1}$ (exact)
	$= \dfrac{A}{1 + AB}$	$= \dfrac{-AK}{1 + AB}$, where $K = \dfrac{R_F}{R_1 + R_F}$
	$= 1 + \dfrac{R_F}{R_1}$ (ideal)	$= -\dfrac{R_F}{R_1}$ (ideal)
2. Gain of the feedback circuit	$B = \dfrac{R_1}{R_1 + R_F}$	$B = \dfrac{R_1}{R_1 + R_F}$
3. Input resistance	$R_{iF} = R_i(1 + AB)$	$R_{iF} = R_1 + \left(\dfrac{R_F}{1 + A} \Big\| R_i\right)$
4. Output resistance	$R_{oF} = \dfrac{R_o}{1 + AB}$	$R_{oF} = \dfrac{R_o}{1 + AB}$
5. Bandwidth	$f_F = f_o(1 + AB)$	$f_F = f_o(1 + AB)$
	$f_F = \dfrac{\text{UGB}}{A_F}$	$f_F = \dfrac{(\text{UGB})(K)}{A_F}$
6. Total output offset voltage	$V_{ooT} = \dfrac{\pm V_{sat}}{1 + AB}$	$V_{ooT} = \dfrac{\pm V_{sat}}{1 + AB}$