kamstrup

Data sheet

MULTICAL® 603

The future-proof heat and cooling meter with full flexibility

- Fully programmable data logger with minute loggers
- 2 second integration interval
- 16 years battery lifetime at a reading interval down to 10 seconds
- Possibility of built-in M-Bus
- 2 communication modules
- 7 or 8 digit display resolution
- User-friendly interface with 3 push buttons
- Possibility of backlit display
- Auto Detect of ULTRAFLOW®

MID

CE M17 0200

EN 1434

DK-BEK 1178 – 06/11/2014

DK 268 17

EN 1434

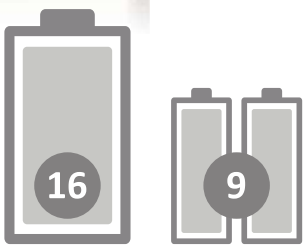

Contents

Description	2
Mechanical construction	3
Mechanical data	3
Dimensioned sketches	4
Measurement accuracy	5
Approved meter data	5
Electrical data	6
Product variants	8
Meter configuration	10
Information code types in display	11
Accessories	12

Description

MULTICAL® 603 is an all-round calculator, suitable as heat meter, cooling meter or combined heat/cooling meter together with 1 or 2 flow sensors and 2 or 3 temperature sensors. The meter is intended for energy measurement in almost all types of thermal installations where water is used as the energy-conveying medium.

MULTICAL® 603 can, in addition to heat and cooling measurement, be used for leakage monitoring, permanent performance monitoring, as power and flow limiter with valve control as well as for energy measurement in both open and closed systems.

According to EN 1434 and MID, MULTICAL® 603 can be designated as a "calculator" with separate type approval and verification, and it can be delivered either as a separate calculator or as a complete meter, with mounted temperature sensors and flow sensor according to customer requirements.

MULTICAL® 603 has 2 flow sensor inputs that can be used for both electronic and mechanical flow sensors. The pulse figure can be programmed from 0.001 to 300 pulses/liter, and the calculator can be programmed to all nominal flow sensor sizes from 0.6 to 15,000 m^3/h. The calculator can be delivered with both galvanically connected and separated flow sensor inputs.

The accumulated heat energy and/or cooling energy can be displayed in kWh, MWh, GJ or Gcal, all in the form of seven or eight significant digits plus measuring unit. The display has been specially designed with a view to obtaining long lifetime and sharp contrast in a wide temperature range. Furthermore, MULTICAL® 603 can be delivered in a variant with backlit display (type 603-F).

MULTICAL® 603 is powered by an internal D-cell lithium battery with a lifespan of up to 16 years or a 2xAA lithium packet with a lifespan of up to 9 years. Alternatively, the meter can be mains supplied, either by 24 VAC or 230 VAC.

In designing MULTICAL® 603, great importance has been attached to flexibility through programmable functions and plug-in modules in order to secure optimum use in a wide range of applications. The meter has been configured from the factory and is ready for use. It can, however, be changed/reconfigured after installation via the front keys of the meter, READy or METERTOOL HCW.

Auto Detect enables the exchange of ULTRAFLOW® X4 on MULTICAL® 603 without the need for reconfiguration (change of the CCC code). MULTICAL® 603 can automatically adjust the pulse figure and q_p to match the connected ULTRAFLOW® X4 via Auto Detect. Auto Detect is active with CCC code 8xx and is initiated when the calculator top and base are separated and reassembled.

Mechanical construction

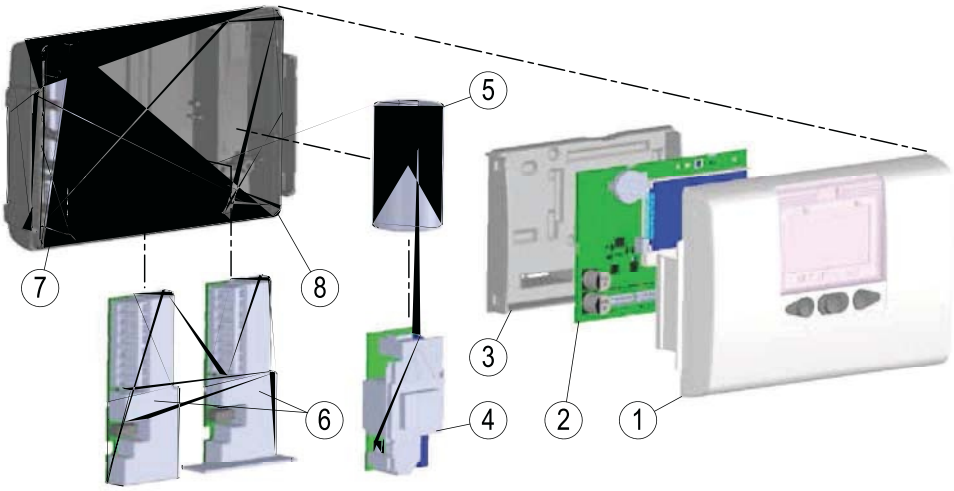

1 Calculator top with front keys and laser engraving
2 PCB with microcontroller, display, etc.
3 Verification cover (may only be opened at an authorised laboratory)
4 Either a power supply module can be mounted...
5 ... or a battery can be mounted
6 1 or 2 communication modules
7 Connection of temperature sensors and flow sensors
8 Calculator base

Mechanical data

Environmental class	Complies with EN 1434 class A and C (MID class E1 and E2)
Ambient temperature	5...55 °C non-condensing, closed location (installation indoors)
Protection class	Calculator: IP65 according to EN/IEC 60529
Medium temperatures ULTRAFLOW®	2...130 °C At medium temperatures below ambient temperature or above 90 °C in the flow sensor, we recommend that the calculator is wall-mounted.
Medium in ULTRAFLOW®	Water (district heating water as described in CEN TR 16911 and AGFW FW510)
Storage temperature	-25...60 °C (drained flow sensor)
Connection cable	ø3.5...6 mm
Supply cable	ø5...8 mm

Materials

Calculator case	
– Top and base	Thermoplastic, PC 10 % GF with TPE (thermoplastic elastomer)
– Verification cover	ABS
Cables	Silicone cable with inner Teflon insulation

Dimensioned sketches

All measurements in [mm].

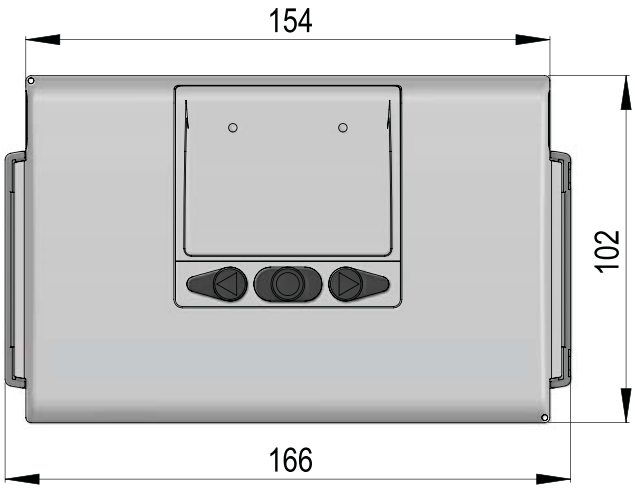

Mechanical measurements for MULTICAL® 603 calculator

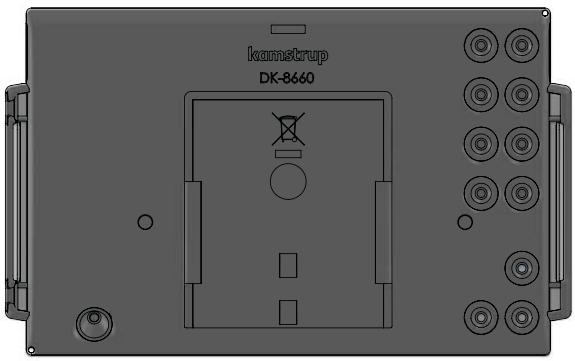

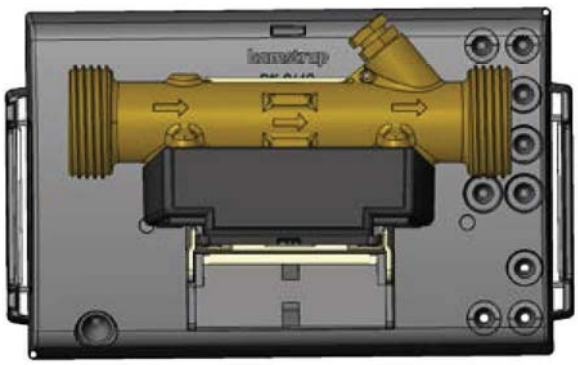

Calculator base separate and mounted on ULTRAFLOW®

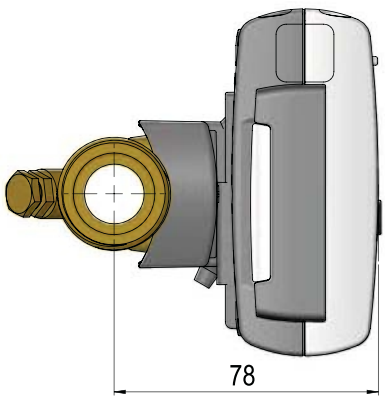

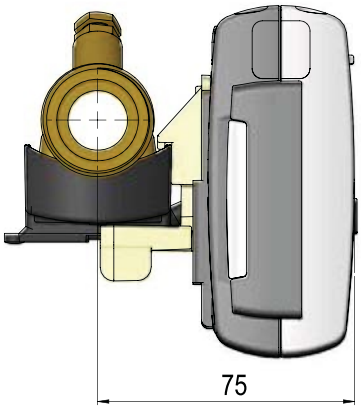

MULTICAL® 603 mounted on ULTRAFLOW® with G¾ threaded connection

Measurement accuracy

Heat meter components	MPE according to EN 1434-1	Typical accuracy
MULTICAL® 603	E_c = ± (0.5 + ΔΘ min/ΔΘ) %	E_c = ± (0.15 + 2/ΔΘ) %
Sensor pair	E_t = ± (0.5 + 3 ΔΘ min/ΔΘ) %	E_t = ± (0.4 + 4/ΔΘ) %
ULTRAFLOW®	E_f = ± (2 + 0.02 q_p/q), but not above ± 5 %	E_f = ± (1 + 0.01 q_p/q) %

MULTICAL® 603
and ULTRAFLOW® q_p 1.5 m³/h @ΔΘ 30K

Total typical accuracy of MULTICAL® 603, sensor pair and ULTRAFLOW® compared to EN 1434-1.

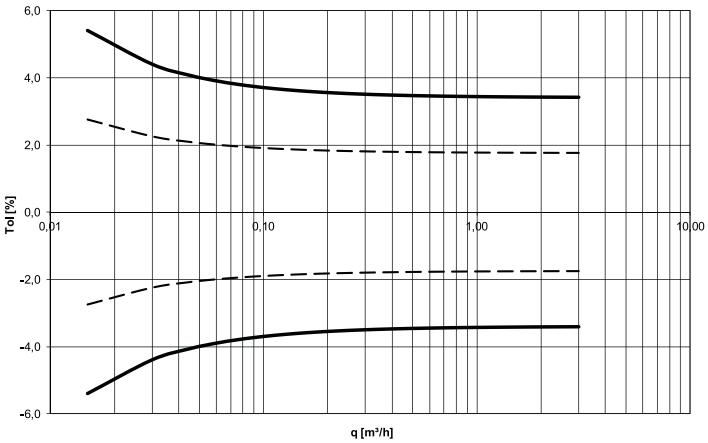

Approved meter data

Approvals	DK-0200-MI004-0XX, heat meter according to MID 2014/32 EU and EN 1434:2015 TS 27.02 0XX, cooling meter according to DK-BEK 1178 and EN 1434:2015
EU directives	Measuring Instrument Directive, Low Voltage Directive, Electromagnetic Compatibility Directive, Radio Equipment Directive, RoHS directive
Heat meter approval – Temperature range – Differential area	DK-0200-MI004-040 θ: 2 °C...180 °C ΔΘ: 3 K...178 K
Cooling meter and cooling/heat meter – Temperature range – Differential area	TS 27.02 012 θ: 2 °C...180 °C ΔΘ: 3 K...178 K
Medium temperature, ULTRAFLOW®	θq: 2 °C...130 °C
Temperature sensor connection	Type 603-A Pt100 – EN 60751, 2-wire connection Type 603-B Pt100 – EN 60751, 4-wire connection Type 603-C/E/F Pt500 – EN 60751, 2-wire connection Type 603-D/G Pt500 – EN 60751, 4-wire connection
EN 1434 designation	Environmental class A and C
MID designation	Mechanical environment: Class M1 and M2 Electromagnetic environment: Class E1 and E2 Non-condensing environment, closed location (indoors), 5...55 °C

Electrical data

Calculator data	
Typical accuracy	Calculator: E_c ± (0.15 + 2/ΔΘ) % Sensor pair: E_t ± (0.4 + 4/ΔΘ) %
Display	LCD – 7 or 8 digits, digit height 8.2 mm
Resolutions	999,9999 - 9999,999 – 99999,99 – 999999,9 – 9999999 9999,9999 - 99999,999 – 999999,99 – 9999999,9 – 99999999
Energy units	MWh – kWh – GJ – Gcal
Data logger (EEPROM)	
– Logger contents	Programmable – all registers can be selected
– Logging interval	Programmable – from 1 minute to 1 year
– Logging depth	Programmable – standard: 20 years, 36 months, 460 days, 1400 hours (RR code = 10)
Info logger (EEPROM)	250 info codes (last 50 are shown in the display)
Clock/calender (with backup battery)	Clock, calendar, leap year compensation, target date
Daylight saving time/wintertime (DST)	Programmable This function can be disabled so that "technical normal time" is used
Time accuracy	Without external adjustment: Less than 15 min./year With external adjustment every 48 hours: Less than 7 s from legal time
Data communication	KMP protocol with CRC16 used for optical communication as well as for modules
Power in temperature sensors	< 10 µW RMS
Power supply	3.6 VDC ± 0.1 VDC
Battery	

	3.65 VDC, D-cell lithium	**3.65 VDC, 2xA cell lithium**
Wall-mounted	16 years @ t_{BAT} < 30 °C	9 years @ t_{BAT} < 30 °C
Mounted on flow sensor	14 years @ t_{BAT} < 40 °C	7 years @ t_{BAT} < 40 °C

Note: Depends on the meter and module configuration

Mains supply	230 VAC +15/-30 %, 50/60 Hz 24 VAC ±50 %, 50/60 Hz
Insulation voltage	3.75 kV
Power consumption	< 1 W
Backup supply	Integrated supercap eliminates interruptions due to short-term power failures (only supply modules type 7 and 8)
EMC data	Complies with EN 1434:2015, class A and C (MID class E1 and E2)

Electrical data

Temperature measurement	t1 Inlet	t2 Outlet	t3 Inlet	t4 Outlet	ΔΘ (t1-t2) Heat measure-ment	ΔΘ (t2-t1) Cooling measure-ment	t5 Preset for A1 and A2
Measuring range 603-A, 2-wire, Pt100 603-B, 4-wire, Pt100 603-C/E/F, 2-wire, Pt500 603-D/G, 4-wire, Pt500	0.00...185.00 °C (t1 and t2: Approved for 2.00...180.00°C)						
Offset adjustment	± 0.99 K joint zero point adjustment for t1, t2 and t3 **Note:** The offset adjustment is only active on measured temperatures. If, for example, t3 has been selected for a preset value, the offset adjustment will not influence the preset value.						

Max cable lengths (max ø6 mm cable)	Pt100, 2-wire	Pt100, 4-wire	Pt500, 2-wire	Pt500, 4-wire
	2 x 0.25 mm²: 2.5 m 2 x 0.50 mm²: 5 m 2 x 1.00 mm²: 10 m	4 x 0.25 mm²: 100 m	2 x 0.25 mm²: 10 m	4 x 0.25 mm²: 100 m

Flow measurement V1/V2	ULTRAFLOW® V1: 9-10-11 V2: 9-69-11	Reed contacts V1: 10-11 V2: 69-11	FET contacts V1: 10-11 V2: 69-11	24 V active pulses V1: 10B-11B
CCC-code	1xx-2xx-4xx-5xx-8xx	0xx	9xx	2xx and 9xx
EN 1434 pulse class	IC	IB	IB	(IA)
Pulse input	680 kΩ pull-up to 3.6 V	680 kΩ pull-up to 3.6 V	680 kΩ pull-up to 3.6 V	12 mA at 24 V
Pulse ON	< 0.4 V in > 0,5 ms	< 0.4 V in > 300 ms	< 0.4 V in > 30 ms	< 4 V in > 3 ms
Pulse OFF	> 2.5 V in > 10 ms	> 2.5 V in > 100 ms	> 2.5 V in > 100 ms	> 12 V in > 10 ms
Pulse frequency	< 128 Hz	< 1 Hz	< 8 Hz	< 128 Hz
Integration frequency	< 1 Hz	< 1 Hz	< 1 Hz	< 1 Hz
Electrical isolation	No	No	No	2 kV
Max cable length	10 m	10 m	10 m	100 m
Max cable length with Cable Extender Box, Type 66-99-036	30 m	30 m	30 m	-

Pulse inputs In-A/In-B	Electronic switch	Reed-switch
Pulse input	680 kΩ pull-up to 3.6 V	680 kΩ pull-up to 3.6 V
Pulse ON	< 0.4 V in > 30 ms	< 0.4 V in > 500 ms
Pulse OFF	> 2.5 V in > 30 ms	> 2.5 V in > 500 ms
Pulse frequency	< 3 Hz	< 1 Hz
Electrical isolation	No	No
Max cable length	25 m	25 m
Requirements to external contact	Leakage current at function open < 1 µA	

Pulse outputs Out-C/Out-D	Type HC-003-21	Type HC-003-11	Type HC-003-11
Pulse output type		Before YYYY-MM-DD	After YYYY-MM-DD
Type	Open collector (OB)	Open collector (OB)	Opto FET
External voltage	5...30 VDC	5...30 VDC	5...48 VDC/AC
Current	1...10 mA	1...10 mA	1...50 mA
Residual stress	U_{CE} ≈ 1 V at 10 mA	U_{CE} ≈ 1 V at 10 mA	R_{ON} ≤ 40 Ω
Electrical isolation	2 kV	2 kV	2 kV
Max cable length	25 m	25 m	25 m

Product variants

The required product variant is selected via the meter's type number, whereas the meter configuration is selected via the meter's configuration number. Further configuration parameters can be selected at submission of order. The meter has been configured from the factory and is ready for use. It can, however, be changed/reconfigured after installation via the front keys of the meter, READy or METERTOOL HCW.

MULTICAL® 603 type number

					Statistical data Written on the meter's front				Dynamic data Appearing from display				
				Type 603-	□	□	□□	–	□	□□	□	□□	□□
Calculator type													
Pt100 2-wire	t1-t2	V1	M-Bus		A								
Pt100 4-wire	t1-t2	V1	M-Bus		B								
Pt500 2-wire	t1-t2	V1	M-Bus		C								
Pt500 4-wire	t1-t2	V1	M-Bus		D								
Pt500 2-wire	t1-t2-t3	V1-V2			E								
Pt500 2-wire	t1-t2-t3	V1-V2	Backlit display		F								
Pt500 4-wire	t1-t2	V1 (24 V active pulses)	M-Bus		G								
Meter type													
Heat meter		MID module B				1							
Heat meter		MID module B+D				2							
Heat/cooling meter		MID module B+D & TS 27.02		θ_{HC} = OFF		3							
Heat meter		National approval				4							
Cooling meter		TS 27.02+BEK1178				5							
Heat/cooling meter		MID module B+D & TS 27.02		θ_{HC} = ON		6							
Volume meter						7							
Energy meter						9							
Country code													
Determined by Kamstrup upon receipt of order							XX						
Flow sensor connection type													
Delivered with one ULTRAFLOW®									1				
Delivered with two identical ULTRAFLOW®									2				
Prepared for one ULTRAFLOW®									7				
Prepared for two identical ULTRAFLOW®									8				
Prepared for flow sensor with fast and bounce-free electronic pulses									C				
Prepared for flow sensor with slow and bounce-free electronic pulses									J				
Prepared for flow sensor with slow pulses with bounce									L				
Prepared for flow sensor with 24 V active pulses									P				

Product variants

MULTICAL® 603 type number

			Type 603- □ □ □□ – □	□□	□	□□	□□
					Dynamic data Appearing from display		
Temperature sensor set							
No temperature sensors				00			
PT500 temparature sensor pair							
Short direct sensor pair	27.5 mm	1.5 m		11			
Short direct sensor pair	27.5 mm	3.0 m		12			
Short direct pair (3 pairs)	27.5 mm	1.5 m		15			
Short direct pair (3 pairs)	27.5 mm	3.0 m		16			
Short direct sensor pair	38.0 mm	1.5 m		21			
Short direct sensor pair	38.0 mm	3.0 m		22			
Pocket sensor pair	ø5.8 mm	1.5 m		31			
Pocket sensor pair	ø5.8 mm	3.0 m		32			
Pocket sensor pair	ø5.8 mm	5.0 m		33			
Pocket sensor pair	ø5.8 mm	10.0 m		34			
Pocket sensor pair (3 pairs)	ø5.8 mm	1.5 m		35			
Pocket sensor pair (3 pairs)	ø5.8 mm	3.0 m		36			
Pocket sensor pair (3 pairs)	ø5.8 mm	5.0 m		37			
Pocket sensor pair (3 pairs)	ø5.8 mm	10.0 m		38			
Pt100 temperature sensor pair							
Short direct sensor pair	27.5 mm	2.0 m		J1			
Short direct sensor pair	38.0 mm	2.0 m		J2			
Supply							
No supply					0		
Battery, 1 x D-cell					2		
230 VAC high-power SMPS					3		
24 VAC/VDC high-power SMPS					4		
230 VAC power supply					7		
24 VAC power supply					8		
Battery, 2 x A-cells					9		
Communication module (2 module slots)							
No module						00	00
Data + 2 pulse inputs (In-A, In-B)						10	10
Data + 2 pulse outputs (Out-C, Out-D) + pulse transmitter (V1+V2)						11	11
M-Bus, configurable + 2 pulse inputs (In-A, In-B)						20	20
M-Bus, configurable + 2 pulse outputs (Out-C, Out-D)						21	21
M-Bus, configurable with Thermal Disconnect						22	22
Wireless M-Bus, EU, configurable, 868 MHz + 2 pulse inputs (In-A, In-B)						30	30
Wireless M-Bus, EU, configurable, 868 MHz + 2 pulse outputs (Out-C, Out-D)						31	31
Analog output module 2x 0/4...20 mA						40	40
LON FT-X3 + 2 pulse inputs (In-A, In-B)						60	60
BACnet MS/TP (RS-485) + 2 pulse inputs (In-A, In-B)						66	66
Modbus RTU (RS-485) + 2 pulse inputs (In-A, In-B)						67	67

Meter configuration

The required product variant is selected via the meter's type number, whereas the meter configuration is selected via the meter's configuration number (shown below). The below overview shows the standard configurations. Contact Kamstrup A/S for information about further configuration possibilities.

	A	B	CCC	DDD	EE	FF	GG	L	M	N	PP	RR	T	VVVV
Flow sensor position														
Inlet	3													
Outlet	4													
Measuring unit														
GJ		2												
kWh		3												
MWh		4												
Gcal		5												
Auto Detect CCC codes (UF x4)														
Normal resolution (7 digits)			807											
High resolution (8 digits)			818											
Static CCC codes														
Reed contact (7 digits)			0xx											
Electronic, fast pulses (7 digits)			1xx											
Electronic, fast pulses (8 digits)			2xx											
Kamstrup, UF X4 (7 digits)			4xx											
Kamstrup, UF X4 (8 digits)			5xx											
Electronic, slow pulses (7 digits)			9xx											
Display														
Heat meter (standard)				210										
Heat/cooling meter (standard)				310										
Cooling meter (standard)				510										
Tariffs														
No active tariff					00									
Power tariff					11									
Flow tariff					12									
t1-t2 tariff					13									
Inlet tariff					14									
Outlet tariff					15									
Time-controlled tariff					19									
Heat/cooling volume tariff					20									
PQ tariff					21									
Pulse inputs In-A/In-B														
10 m^3/h, 10 l/imp, pre-counter 1 (standard)						24	24							
Integration mode														
Adaptive mode (2-64 s)	Display on							1						
Normal mode (32 s)	Display on							2						
Fast mode (8 s)	Display on							3						
Mains mode (2 s)	Display on							4						
Adaptive mode (2-64 s)	Display off							5						
Normal mode (32 s)	Display off							6						
Fast mode (8 s)	Display off							7						
Mains mode (2 s)	Display & backlight on							9						
Leakage limits (V1/V2)														
OFF									0					
1.0 % of q_p + 20 % of q									1					
1.0 % of q_p + 10 % of q									2					
0.5 % of q_p + 20 % of q									3					
0.5 % of q_p + 10 % of q									4					
Cold water leakage limits (In-A/In-B)														
OFF										0				
30 min. without pulses										1				
One hour without pulses										2				
Two hours without pulses										3				

Meter configuration

	A - B - CCC - DDD - EE - FF - GG - L - M - N - PP - RR - T - VVVV
Pulse outputs Out-C/Out-D	
Out-C: V1/1, Out-D: V2/1	3.9 ms 80
Out-C: V1/1	3.9 ms 82
Out-C: V1/4	22 ms 83
E1 and V1 or E3 and V1	10 ms 94
E1 and V1 or E3 and V1	32 ms 95
E1 and V1 or E3 and V1	100 ms (0.1 s) 96
Controlled output based on data commands	99
Data logger profile	
Standard data logger profile	10
Encryption level	
Common key	2
Individual key	3
Customer label	
Serial number	0000

Information code types in display

Display digit								
1	**2**	**3**	**4**	**5**	**6**	**7**	**8**	
Info	**t1**	**t2**	**t3**	**V1**	**V2**	**In-A**	**In-B**	**Description**
1								No voltage supply *
2								Low battery level
9								External alarm (e.g. via KMP)
	1							t1 Above measuring range or switched off
		1						t2 Above measuring range or switched off
			1					t3 Above measuring range or switched off
	2							t1 Below measuring range or short-circuited
		2						t2 Below measuring range or short-circuited
			2					t3 Below measuring range or short-circuited
	9	9						t1-t2 Invalid temperature difference
				1				V1 Communication error
					1			V2 Communication error
				2				V1 Wrong pulse figure
					2			V2 Wrong pulse figure
				3				V1 Air
					3			V2 Air
				4				V1 Wrong flow direction
					4			V2 Wrong flow direction
				6				V1 Increased flow (flow1 > q_s, for more than 1 hour)
					6			V2 Increased flow (flow2 > q_s, for more than 1 hour)
				7				V1/V2 Burst, water loss (flow1 > flow2)
					7			V1/V2 Burst, water penetration (flow1 < flow2)
				8				V1/V2 Leakage, water loss (M1 > M2)
					8			V1/V2 Leakage, water penetration (M1 < M2)
						7		In-A2 Leakage in the system
						8		In-A1 Leakage in the system
						9		In-A1/A2 External alarm
							7	In-B2 Leakage in the system **
							8	In-B1 Leakage in the system **
							9	In-B1/B2 External alarm

Note: Info codes are configurable. Therefore, it is not certain that all the parameters are available in a given MULTICAL® 603.

* This parameter of the info code does not appear from the current info code as it is only active when the meter is without supply.

** The info code for leakage at pulse input B must be actively selected.

Accessories

Article number	Description
HC-993-02	Battery module with one D-cell
HC-993-03	230 VAC high-power supply module
HC-993-04	24 VAC/VDC high-power supply module
HC-993-07	230 VAC supply module
HC-993-08	24 VAC supply module
HC-993-09	Battery module with 2 A-cells
3026-207	Wall bracket
3026-858	Angle fitting ULTRAFLOW® (q_p 0.6...2.5)
6699-035	USB module configuration cable
6699-099	Infrared optical reading head w/USB plug
6699-724	METERTOOL HCW
6699-725	LogView HCW
6699-810	Holder for optical readout head for MULTICAL® 302/403/603

Calibration units

Article number	Description
6699-xxx	2-wire Pt100, Heat/Cooling (used with METERTOOL HCW)
6699-xxx	2-wire Pt500, Heat/Cooling (used with METERTOOL HCW)
6699-xxx	4-wire Pt100, Heat/Cooling (used with METERTOOL HCW)
6699-xxx	4-wire Pt500, Heat/Cooling (used with METERTOOL HCW)

Sensor nipples and pockets

Article number	Description
6556-491	R½ nipple for Pt500 short direct sensor
6556-492	R¾ nipple for Pt500 short direct sensor
6557-324	R½ x 65 mm sensor pocket, ø5.8 mm
6557-327	R½ x 90 mm sensor pocket, ø5.8 mm
6557-314	R½ x 140 mm sensor pocket, ø5.8 mm
6561-330	11 mm adapter for 38 mm short direct sensor

Ball valves

Article number	Description
6556-474	½" ball valve with M10 connection for short direct temperature sensor with flat gasket
6556-475	¾" ball valve with M10 connection for short direct temperature sensor with flat gasket
6556-476	1" ball valve with M10 connection for short direct temperature sensor with flat gasket
6556-526	1¼" ball valve with M10 connection for short direct temperature sensor with flat gasket
6556-527	1½" ball valve with M10 connection for short direct temperature sensor with flat gasket

Contact Kamstrup A/S for information about further accessories.

Kamstrup A/S
Industrivej 28, Stilling
DK-8660 Skanderborg
T: +45 89 93 10 00
F: +45 89 93 10 01
info@kamstrup.com
kamstrup.com

kamstrup

Data sheet

TemperatureSensor 63

2-wire temperature sensors for use with heat and cooling meters

- Delivered as a set of two paired temperature sensors
- Easy installation and exchange
- Quick response to temperature changes
- High water resistance (IP68)
- Support of temperature offset adjustment

MID 2014/32/EU

CE M22 0200

EN 1434

DK-BEK 1178 – 06/11/2014

22

EN 1434

Contents

Application	3
Approval and verification	4
Temperature sensors	4
Identification of diameter of pocket sensors	6
Temperature sensor application area	7
Optimise the accuracy of inlet and outlet temperatures through offset adjustment	7
Pockets for ø5.8 mm temperature sensors	8
Pockets for ø5.8 mm / ø6.0 mm temperature sensors	9
Reinforced pockets for ø5.8 mm / ø6.0 mm temperature sensors	10
Accessories	11
Mounting examples	12
Sealing examples	13
Ordering	14

Application

Kamstrup TemperatureSensor 63 consists of two paired temperature sensors and is used together with electronic energy meters for measuring the inlet and outlet temperatures. The temperature sensors have built-in platinum resistors of which the electric resistance changes according to the temperature. A measurement of the resistance value thus provides an analogue expression of the temperature.

Kamstrup TemperatureSensor 63 has a very broad selection of temperature sensor types and thus fits most heat or cooling installations. Kamstrup TemperatureSensor 63 is approved for IP68 and is thus especially suited to be used for both heat and cooling measurements.

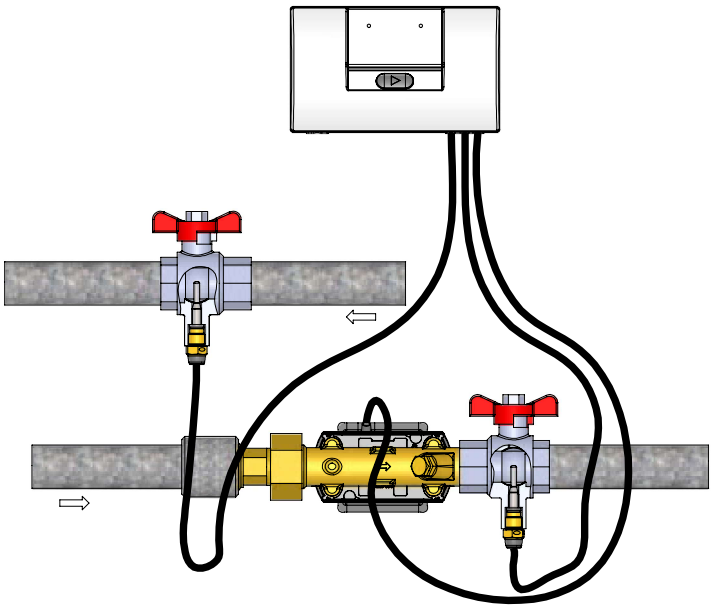

Approval and verification

MID approval DK-0200-MI004-046

Temperature range	θ: 2....150 °C
Temperature difference	ΔΘ: 3....140 K

Danish cooling approval TS 27.02 017

Temperature range	θ: 2....150 °C
Temperature difference	ΔΘ: 3....140 K

Pairing and verification according to EN1434-5:2015.

Temperature sensors

Direct short temperature sensor

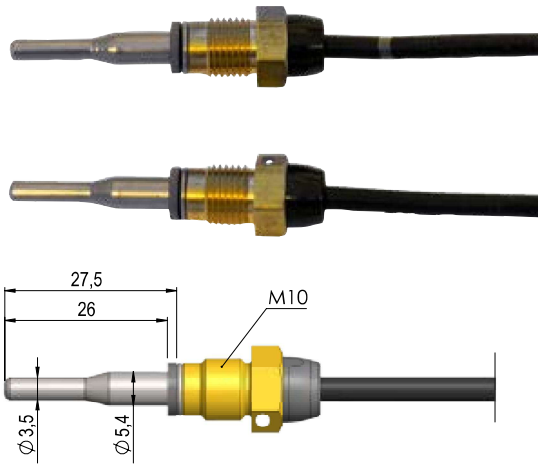

ø5.0 mm / ø5.2 mm temperature sensors

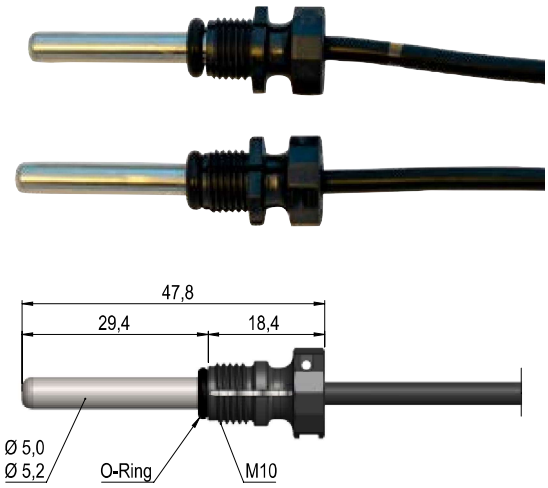

Temperature sensors

ø5.8 mm / ø6.0 mm temperature sensors

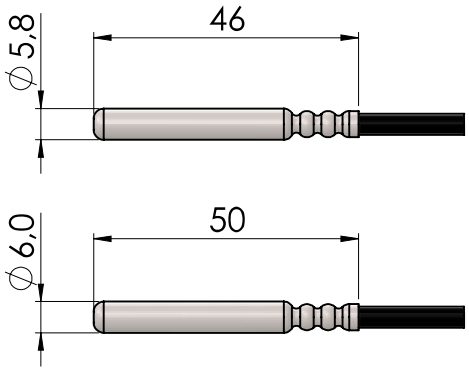

Technical data

	Direct short temperature sensor	ø5.0 mm temperature sensor/ ø5.2 mm temperature sensor	ø5.8 mm temperature sensor/ ø6.0 mm temperature sensor
Component	Pt500 according to EN60751		
Time constant $\tau_{0.5}$	2 s	3 s	4 s
Minimum submersion depth	15 mm	17 mm	18 mm
Sensor pipe material	AISI 316L W-no. 1.4404		
Silicone cable	2 x 0.22 mm²		
Cable lengths	1.5 m, 3 m	1.5 m, 3 m, 5 m, 10 m	

Identification of diameter of pocket sensors

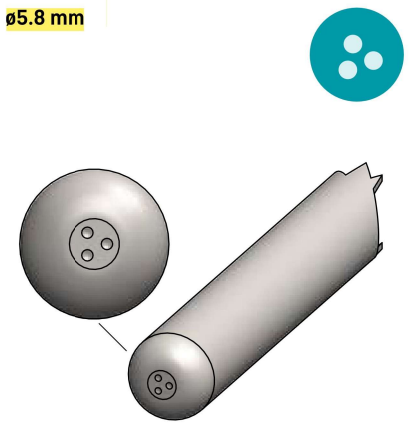

Temperature sensor application area

Ambient temperature	-10 °C...70 °C
Storage and transport temperatures	-25 °C...70 °C
Medium	District heating water
Medium temperature	0...150 °C, for a short period 160 °C
Humidity	< 98 % rF condensing
IP class	IP 68
Approved mechanical classes	M1, M2
Approved pressure stages for direct short temperature sensor	PN16, PN25, PS25
Approved pressure stages for direct short ø5.0 mm/ø5.2 mm temperature sensor with composite union nut	PN16, PN25, PS25

Optimise the accuracy of inlet and outlet temperatures through offset adjustment

The heat/cooling meters MULTICAL® 303, MULTICAL® 403, MULTICAL® 603 and MULTICAL® 803 have an offset adjustment function that enables the adjustment of the inlet and outlet temperatures by up to ± 0.99 K. The offset adjustment value is determined in connection with the factory calibration of Kamstrup TemperatureSensor 63, and when this value is embedded in the meter, the deviation of the inlet and outlet temperatures will typically be less than ± 0.1 K. As both the inlet and outlet temperatures are adjusted with the same value, the offset adjustment does not influence the calculation of the consumed energy.

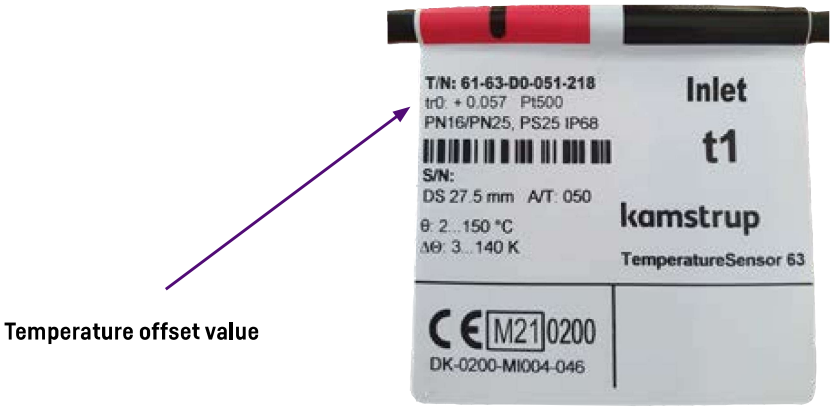

Pockets for ø5.8 mm temperature sensors

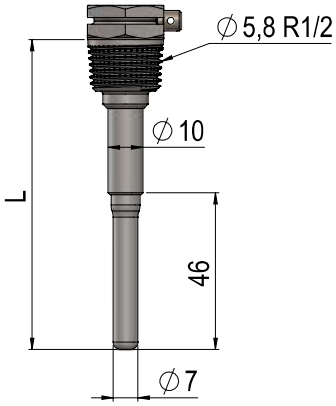

Technical data

Installation lengths	65 mm, 90 mm, 140 mm
Thread	Conical thread R½
Material	AISI 304 / W.-no. 1.4301
Time constant $\tau_{0.5}$	Max 8 s
Type number in approval	65 mm pocket: 6557-340 90 mm pocket: 6557-341 140 mm pocket: 6557-342
Pressure stage	PN16/PN25, PS25
Maximum flow velocity	3 m/s
Maximum application temperature	150 °C
Approved mechanical classes	M1, M2

Pockets for ø5.8 mm / ø6.0 mm temperature sensors

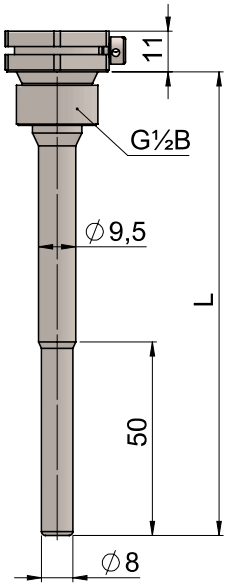

Technical data

Installation lengths L	65 mm, 85 mm, 120 mm, 210 mm
Thread	Straight thread G½B
Gasket	Copper gasket (included in bag with 2 pockets)
Material	AISI 316L / W.-no. 1.4404
Time constant $\tau_{0.5}$	Max 10 s with ø6.0 mm temperature sensor Max 14 s med ø5.8 mm temperature sensor
Type number in approval	65 mm pocket: 6557-355 85 mm pocket: 6557-343 120 mm pocket: 6557-344 210 mm pocket: 6557-345
Pressure stage	PN16/PN25, PS25
Maximum flow velocity	3 m/s
Maximum application temperature	150 °C
Approved mechanical classes	M1, M2

Reinforced pockets for ø5.8 mm / ø6.0 mm temperature sensors

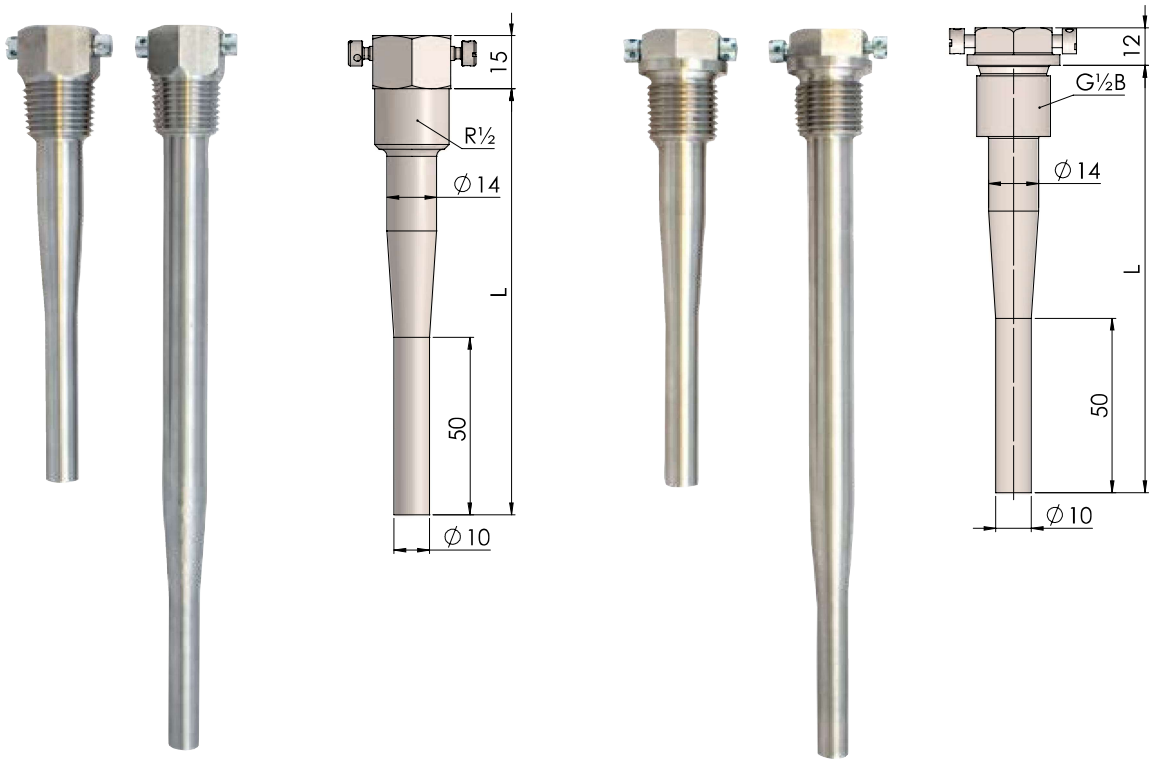

Technical data

Installation lengths	120 mm, 210 mm
Thread	Conical thread R½ or straight thread G½B
Gasket for pockets with straight threads G½B	Copper gasket (included in bag with 2 pockets)
Material	AISI 316L / W.-No. 1.4404
Time constant $\tau_{0.5}$	Max 12 s with ø6.0 mm temperature sensor Max 16 s med ø5.8 mm temperature sensor
Type number in approval	120 mm pockets with R½ thread: 6557-350 210 mm pockets with R½ thread: 6557-351 120 mm pockets with G½B thread: 6557-352 210 mm pockets with G½B thread: 6557-353
Pressure stage	PN16/PN25/PN40, PS40
Maximum flow velocity	10 m/s
Maximum application temperature	180 °C
Approved mechanical classes	M1, M2

Accessories

Nipples

Technical data

Connection	R½ or R¾
Material	MS 58 Bb

Nipples may be used in both PN16 and PN25 installations.

Nipples with increased submersion depth

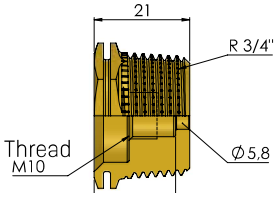

R 3/4

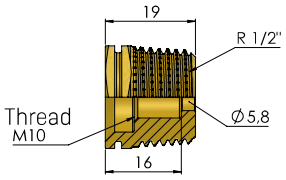

R 1/2

Nipples suited for use with sealing caps

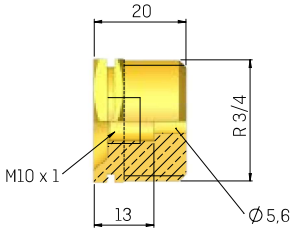

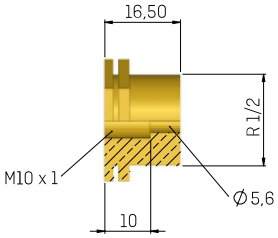

Sealing caps

Mounting examples

Example 1

Direct short temperature sensor mounted in T-piece using a nipple

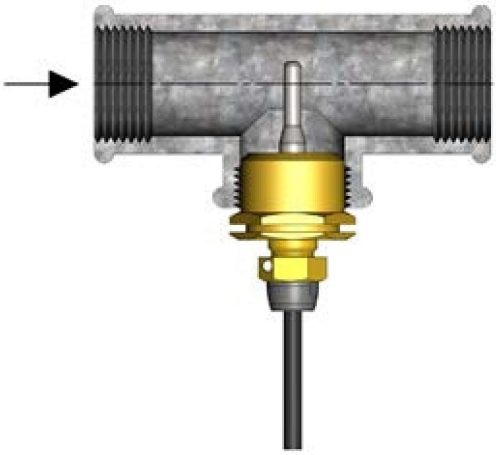

Example 2

ø5.2 mm temperature sensor mounted in MULTICAL® 303

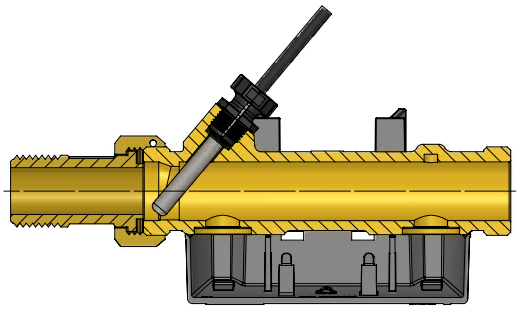

Example 3

ø5.8 mm pocket sensor mounted in 90 degree angle using pocket, type number 6557-340

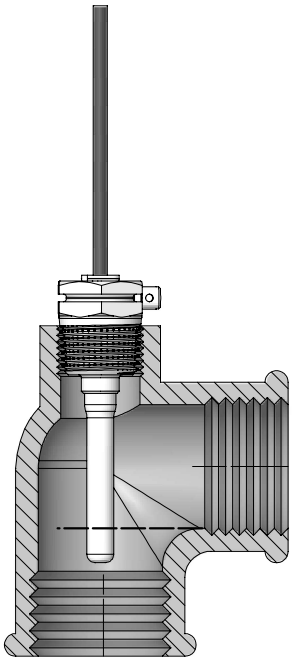

Sealing examples

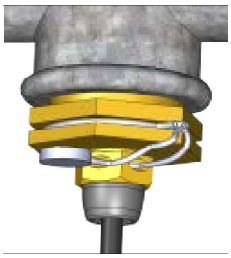

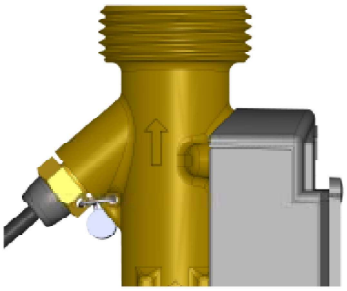

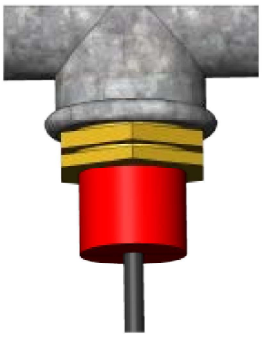

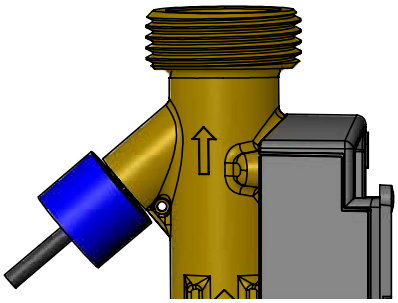

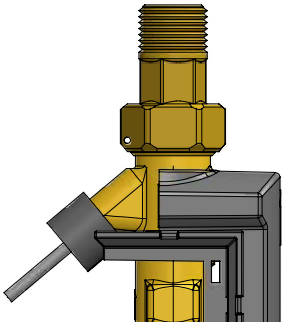

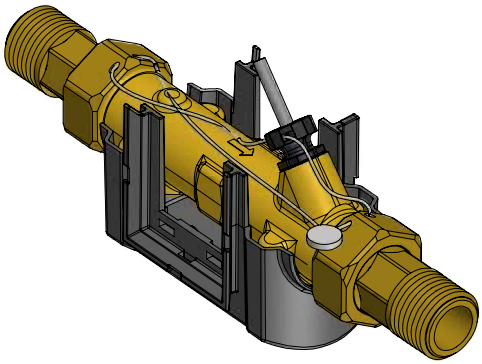

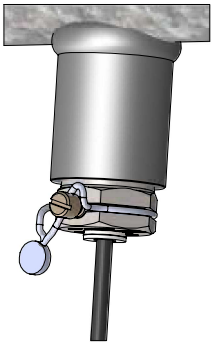

Ordering

Temperature sensor set

Order no. *	Description
61-63-D0-051-XXX	Pt500 direct short temperature sensor set (2 pcs) with 1.5 m cable
61-63-D0-052-XXX	Pt500 direct short temperature sensor set (2 pcs) with 3 m cable
61-63-D0-061-XXX	Pt500 ø5.0 mm direct short temperature sensor set (2 pcs) with 1.5 m cable
61-63-D0-062-XXX	Pt500 ø5.0 mm direct short temperature sensor set (2 pcs) with 3 m cable
61-63-D0-071-XXX	Pt500 ø5.2 mm direct short temperature sensor set (2 pcs) with 1.5 m cable
61-63-D0-072-XXX	Pt500 ø5.2 mm direct short temperature sensor set (2 pcs) with 3 m cable
61-63-D0-073-XXX	Pt500 ø5.2 mm direct short temperature sensor set (2 pcs) with 5 m cable
61-63-D0-081-XXX	Pt500 ø5.8 mm pocket sensor set (2 pcs) with 1.5 m cable
61-63-D0-082-XXX	Pt500 ø5.8 mm pocket sensor set (2 pcs) with 3 m cable
61-63-D0-083-XXX	Pt500 ø5.8 mm pocket sensor set (2 pcs) with 5 m cable
61-63-D0-084-XXX	Pt500 ø5.8 mm pocket sensor set (2 pcs) with 10 m cable
61-63-D0-091-XXX	Pt500 ø6.0 mm pocket sensor set (2 pcs) with 1.5 m cable
61-63-D0-092-XXX	Pt500 ø6.0 mm pocket sensor set (2 pcs) with 3 m cable
61-63-D0-093-XXX	Pt500 ø6.0 mm pocket sensor set (2 pcs) with 5 m cable
61-63-D0-094-XXX	Pt500 ø6.0 mm pocket sensor set (2 pcs) with 10 m cable

* The order number may vary due to local approvals

Ordering

Pockets for pocket sensors

Order number	Description
6557-440	Bag with 2 pcs of ø5.8 mm pockets with R½ thread, length 65 mm
6557-441	Bag with 2 pcs of ø5.8 mm pockets with R½ thread, length 90 mm
6557-442	Bag with 2 pcs of ø5.8 mm pockets with R½ thread, length 140 mm
6557-455	Bag with 2 pcs of ø5.8 mm/ø6.0 mm pockets with G½B thread, length 65 mm
6557-443	Bag with 2 pcs of ø5.8 mm/ø6.0 mm pockets with G½B thread, length 85 mm
6557-444	Bag with 2 pcs of ø5.8 mm/ø6.0 mm pockets with G½B thread, length 120 mm
6557-445	Bag with 2 pcs of ø5.8 mm/ø6.0 mm pockets with G½B thread, length 210 mm
6557-450	Bag with 2 pcs of ø5.8 mm/ø6.0 mm reinforced pockets with R½ thread, length 120 mm
6557-451	Bag with 2 pcs of ø5.8 mm/ø6.0 mm reinforced pockets with R½ thread, length 210 mm
6557-452	Bag with 2 pcs of ø5.8 mm/ø6.0 mm reinforced pockets with G½B thread, length 120 mm
6557-453	Bag with 2 pcs of ø5.8 mm/ø6.0 mm reinforced pockets with G½B thread, length 210 mm

Ordering

Accessories

Order number	Description
6556-546	R½ distance nipple for direct short temperature sensor, increased submersion depth
6556-547	R¾ distance nipple for direct short temperature sensor, increased submersion depth
6556-492	R¾ distance nipple for direct short temperature sensor, suited for use with sealing cap
6556-491	R½ distance nipple for direct short temperature sensor, suited for use with sealing cap
2210-233	Fibre gasket for direct short temperature sensor
3026-517	Sealing cap, red, for direct short temperature sensor
3026-518	Sealing cap, blue, for direct short temperature sensor
3026-1034	Sealing cap, black, for ø5.0 mm / ø5.2 mm direct temperature sensors

58101817_B1_EN_02.2022

Kamstrup A/S
Industrivej 28, Stilling
DK-8660 Skanderborg
T: +45 89 93 10 00
F: +45 89 93 10 01
info@kamstrup.com
kamstrup.com