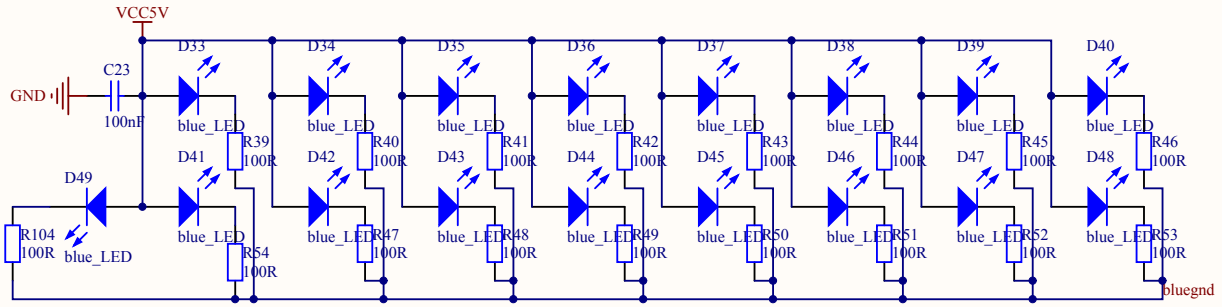

Title		
Size A4	Number	Revision
Date: 2014-06-26		Sheet of
File: D:\Desktop\..\blue.SchDoc		Drawn By:

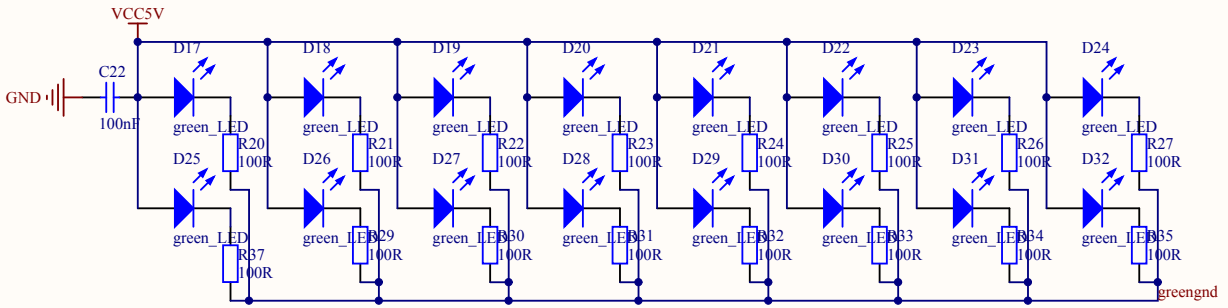

Title		
Size A4	Number	Revision
Date: 2014-06-26		Sheet of
File: D:\Desktop\..\green.SchDoc		Drawn By:

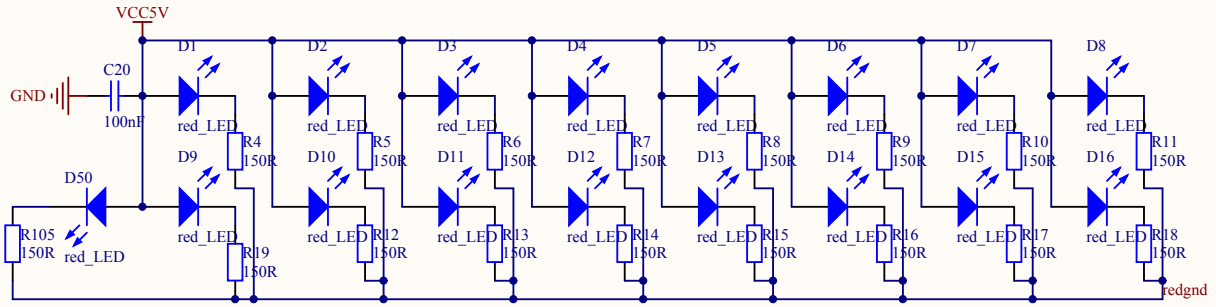

Title		
Size A4	Number	Revision
Date: 2014-06-26	Sheet of	
File: D:\Desktop\..\redx.SchDoc	Drawn By:	

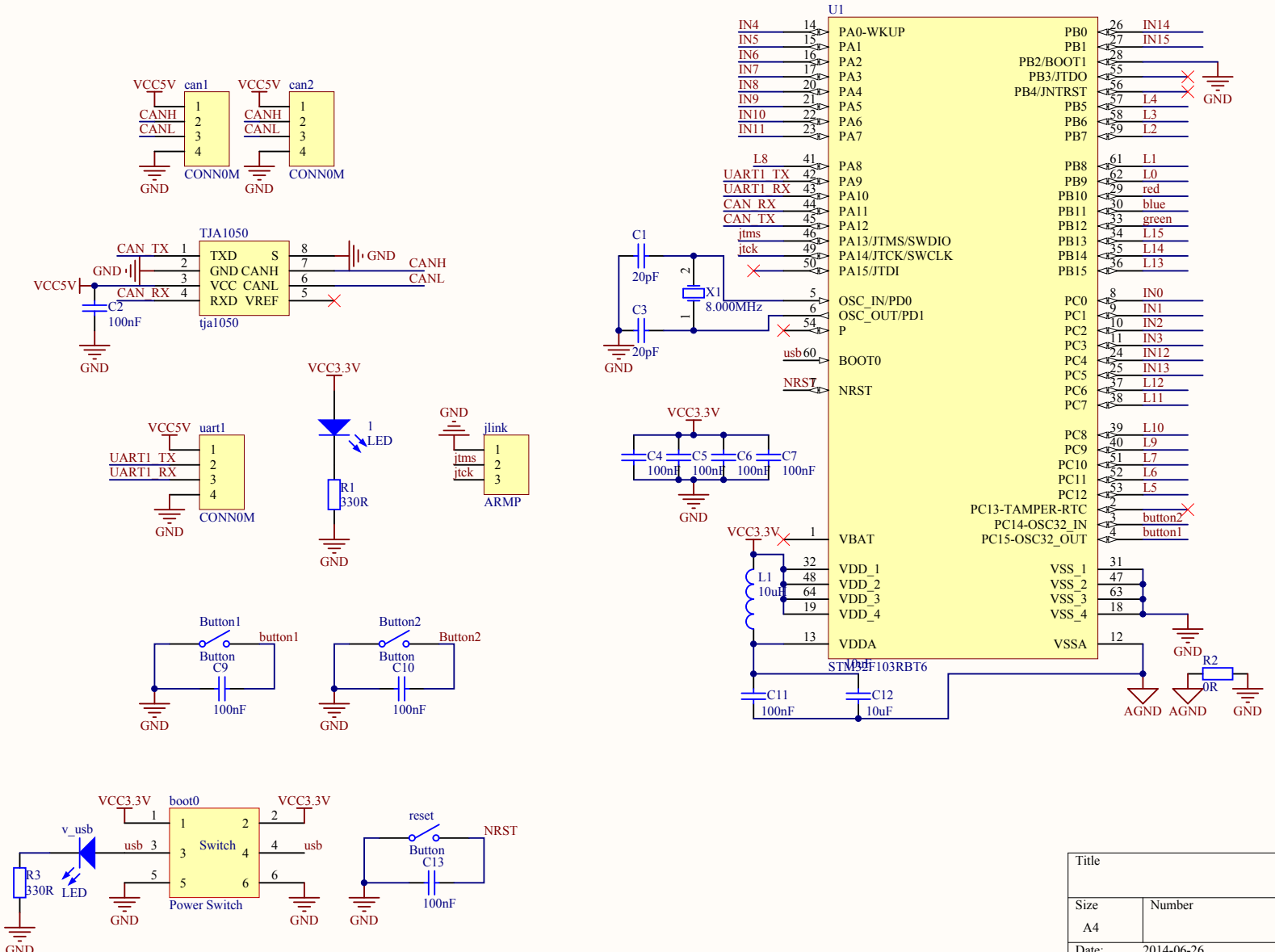

Title		
Size A4	Number	Revision
Date: 2014-06-26	Sheet of	
File: D:\Desktop\..\Sensor Bar 2.0 by GAO.SchDoc	Drawn By:	

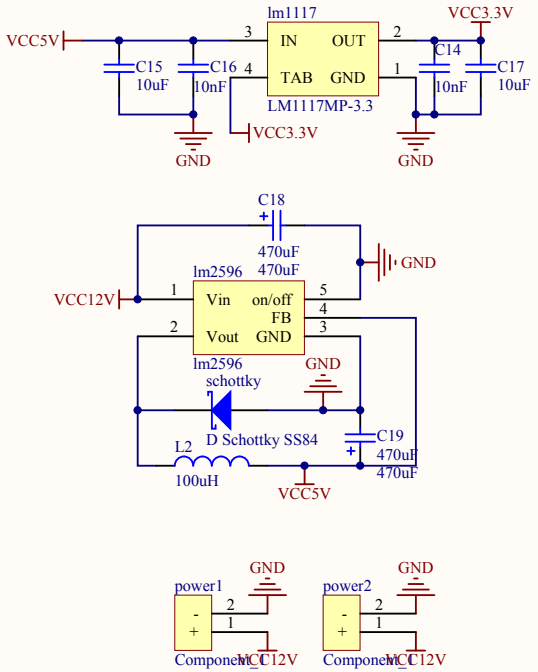

Title		
Size A4	Number	Revision
Date: 2014-06-26	Sheet of	
File: D:\Desktop\..\Sensor Bar 2.0 regulators.SchDoc	Drawn By:	

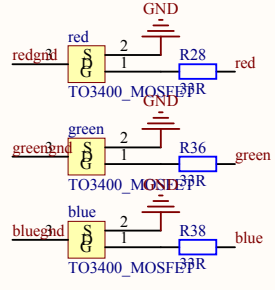

Title		
Size A4	Number	Revision
Date: 2014-06-26	Sheet of	
File: D:\Desktop\..\Sensor Bar 2.0 RGB LED.SchDoc	Drawn By:	

SENSOR

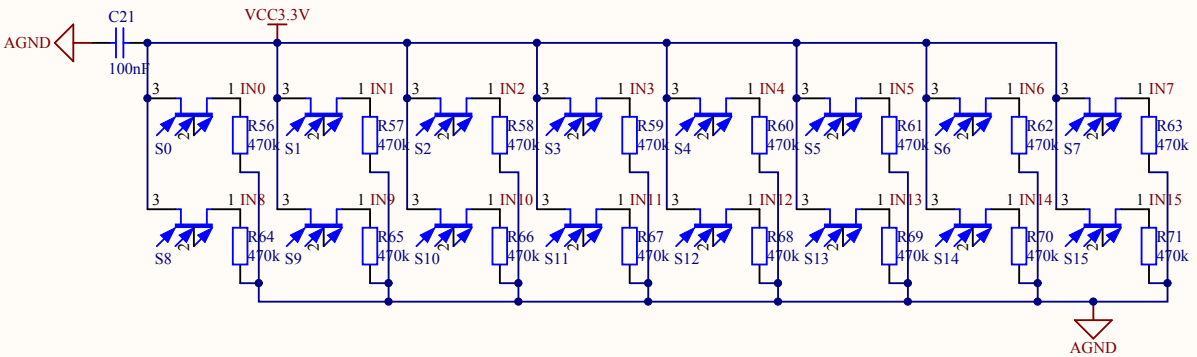

Title		
Size A4	Number	Revision
Date: 2014-06-26	Sheet of	
File: D:\Desktop\..\Sensor Bar 2.0 sensors.SchDoc	Drawn By:	

SIGNAL LED

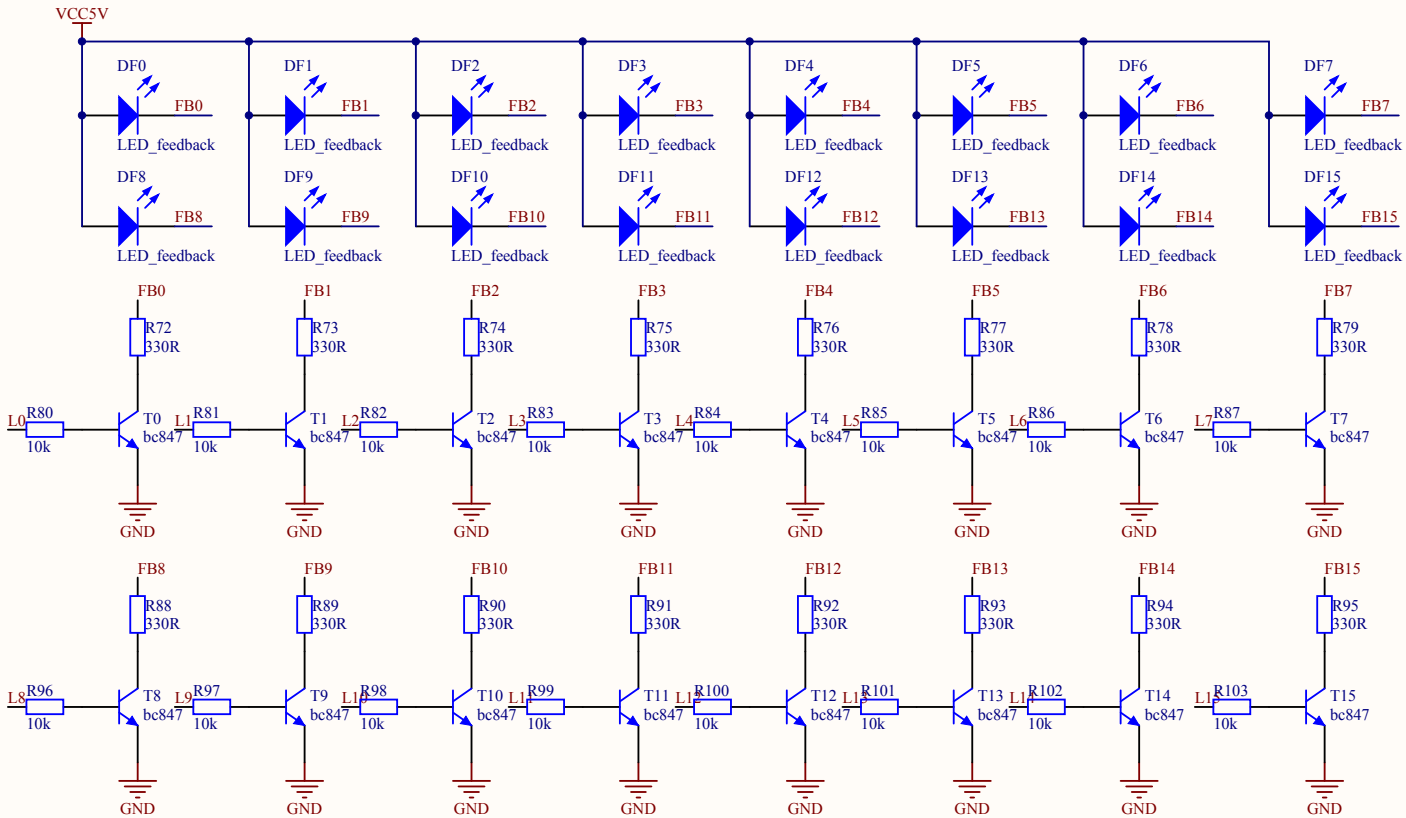

Title		
Size A4	Number	Revision
Date: 2014-06-26	Sheet of	
File: D:\Desktop\..\Sensor Bar 2.0 signal LED.Schdoc	Drawn By:	

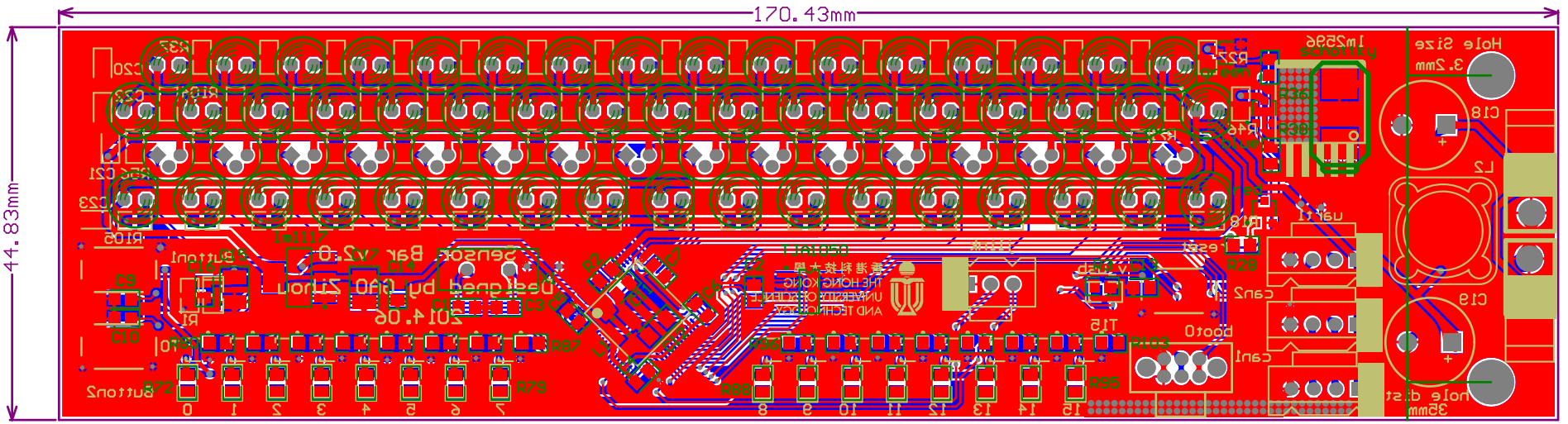
170.43mm
44.83mm

Comment	Description	Designator	Footprint	LibRef	Quantity
LED	Typical RED GaAs LED	1, v_usb	SMD _LED	LED1	2
TO3400_MOSFET		blue, green, red	npn	TO3400_MOSFET	3
Power Switch		boot0	POWER SWITCH	Power Switch	1
Button	Single-Pole, Single-Throw Switch	Button1, Button2, reset	PUSH SWITCH	SW-SPST	3
20pF	Capacitor (Semiconductor SIM Model)	C1, C3	CC2012-0805	Cap Semi	2
100nF	Capacitor (Semiconductor SIM Model)	C2, C4, C5, C6, C7, C9, C10, C11, C13, C20, C21, C22, C23	CC2012-0805	Cap Semi	13
10uF	Capacitor (Semiconductor SIM Model)	C12	CC3216-1206	Cap Semi	1
10nF	Capacitor (Semiconductor SIM Model)	C14, C16	CC2012-0805	Cap Semi	2
10uF	Capacitor (Semiconductor SIM Model)	C15, C17	CC3225-1210	Cap Semi	2
470uF	Polarized Capacitor (Surface Mount)	C18, C19	470UF/ 50V	Cap Pol3	2
CONN0M	Header, 4-Pin	can1, can2, uart1	LOCKEDHDR-4	Header 4	3
red_LED	Typical RED GaAs LED	D1, D2, D3, D4, D5, D6, D7, D8, D9, D10, D11, D12, D13, D14, D15, D16, D50	LED5MM	LED	17
green_LED	Typical RED GaAs LED	D17, D18, D19, D20, D21, D22, D23, D24, D25, D26, D27, D28, D29, D30, D31, D32	LED5MM	LED	16
blue_LED	Typical RED GaAs LED	D33, D34, D35, D36, D37, D38, D39, D40, D41, D42, D43, D44, D45, D46, D47, D48, D49	LED5MM	LED	17
LED_feedback	Typical RED GaAs LED	DF0, DF1, DF2, DF3, DF4, DF5, DF6, DF7, DF8, DF9, DF10, DF11, DF12, DF13, DF14, DF15	SMD _LED	LED	16
ARMP	Header, 3-Pin	jlink	LOCKEDHDR-3	Header 3	1
10uH	Inductor	L1	CR3225-1210	Inductor	1
100uH	Inductor	L2	MSS1260	Inductor	1
LM1117MP-3.3	800mA Low-Dropout Linear Regulator	lm1117	MP04A_N	LM1117MP-3.3	1
lm2596		lm2596	lm2596	Component_1	1
Component_1		power1, power2	PCBComponent_1	Component_1	2
330R	Resistor	R1, R3, R72, R73, R74, R75, R76, R77, R78, R79, R88, R89, R90, R91, R92, R93, R94, R95	CR2012-0805	Res2	18
oR	Resistor	R2	CR2012-0805	Res2	1
150R	Resistor	R4, R5, R6, R7, R8, R9, R10, R11, R12, R13, R14, R15, R16, R17, R18, R19, R105	CR2012-0805	Res2	17
100R	Resistor	R20, R21, R22, R23, R24, R25, R26, R27, R29, R30, R31, R32, R33, R34, R35, R37, R39, R40, R41, R42, R43, R44, R45, R46, R47, R48, R49, R50, R51, R52, R53, R54, R104	CR2012-0805	Res2	33
33R	Resistor	R28, R36, R38	CR2012-0805	Res2	3
470k	Resistor	R56, R57, R58, R59, R60, R61, R62, R63, R64, R65, R66, R67, R68, R69, R70, R71	CR2012-0805	Res2	16
10k	Resistor	R80, R81, R82, R83, R84, R85, R86, R87, R96, R97, R98, R99, R100, R101, R102, R103	CR2012-0805	Res2	16
3du5c		S0, S1, S2, S3, S4, S5, S6, S7, S8, S9, S10, S11, S12, S13, S14, S15	CAN-3/ D5.9	Light	16
D Schottky SS84	Schottky Diode	schottky	sch_diode	D Schottky	1
bc847		T0, T1, T2, T3, T4, T5, T6, T7, T8, T9, T10, T11, T12, T13, T14, T15	npn	npn	16
tja1050		TJA1050	ad8210	tja1050	1
STM32F103RBT6	STM32 ARM-based 32-bit MCU with 128 Kbytes Flash, 64-pin LQFP, Industrial Temperature	U1	LQFP64_N	STM32F103RBT6	1
8.000MHz	Crystal Oscillator	X1	BCY-W2/ E4.7	XTAL	1