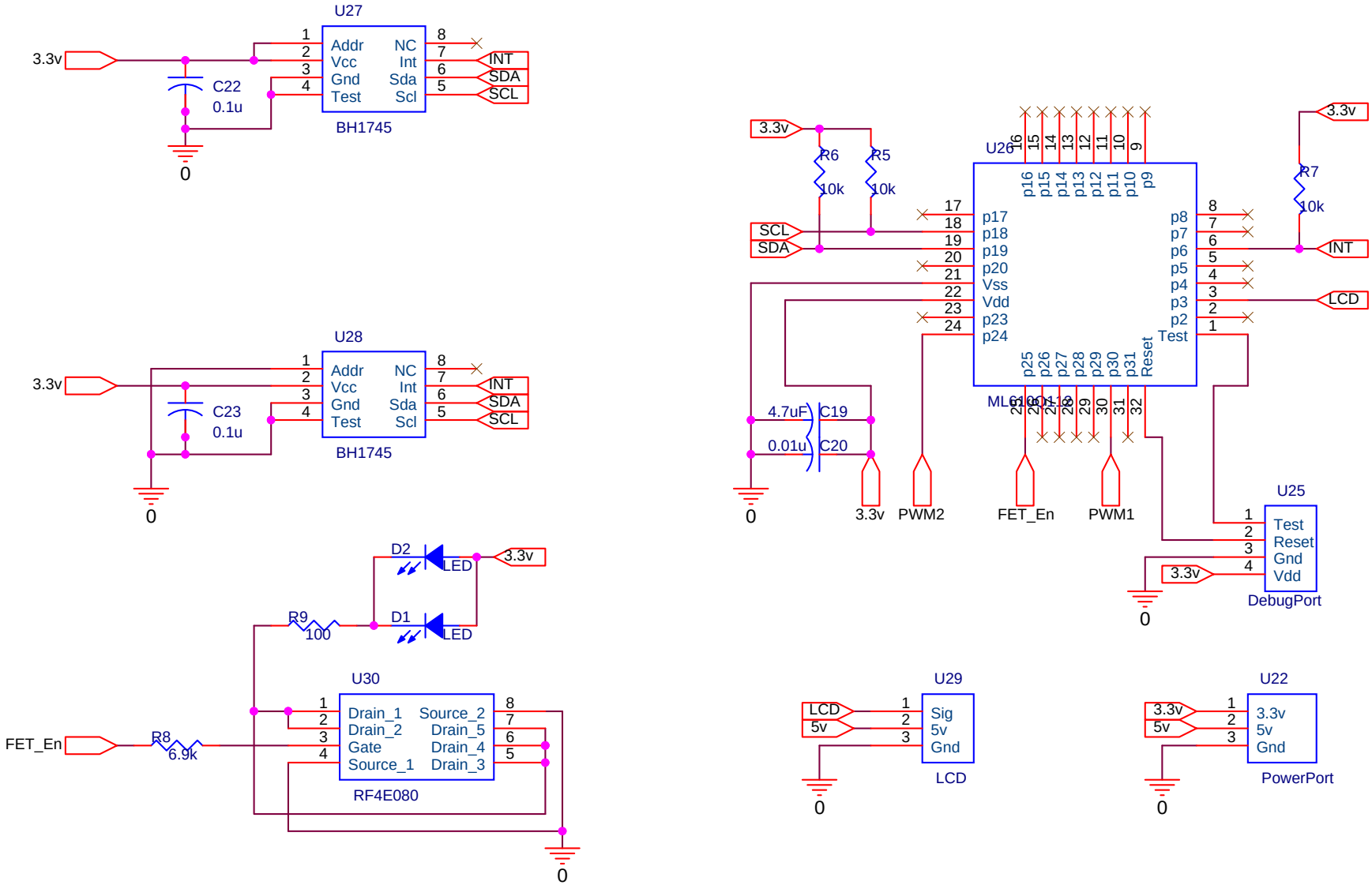

Title	Color Differentiator - 2 Color Sensor / LEDs / MCU / FET	
Size A	Document Number 2/9	Rev Rev1
Date: Thursday, July 09, 2015	Sheet 2 of 7	