H-Bridge DC motor controller Mini-Project

19201418

October 2025

Introduction

This report will analyse circuitry of an H-bridge DC motor controller. The report will outline the key theory necessary to understand the operation of an H-bridge controller. Then demonstrate efficient circuit design through modifications and additions, working towards a real-world application: an elevator motor. In accordance with the report's objectives below, evidence will be provided to justify design decisions.

Objectives:

- To redesign a simple H-bridge DC motor controller in order to control motor speed and acceleration for use as elevator drive, whilst maintaining simple and practical circuits.
- To construct and simulate the circuits using Multisim software to verify and discuss performance.
- To consider the practical limitations of the circuits and their components: suggesting mitigation strategies and assessing other real-world factors such as sustainability and ethics.

The final section of the report will also detail design and testing of a hardware prototype circuit, further demonstrating the understanding and considerations required for successful circuit implementation.

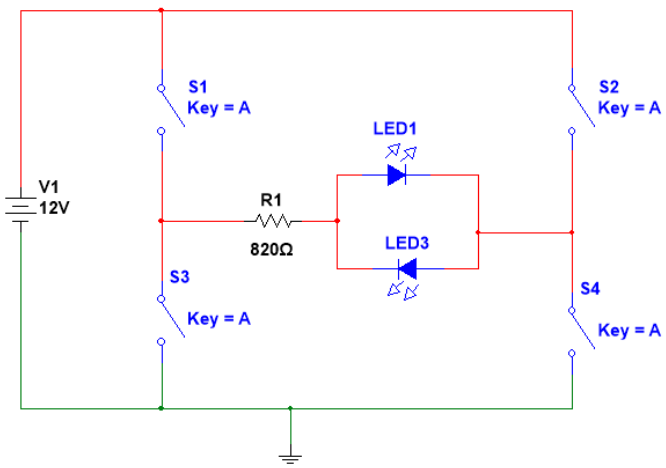

Fig. 1: Basic H-bridge circuit powering opposed LEDs

Part A

i)

The circuit in 'Fig. 1' provides a simple basis to understand H-bridge circuit operation. A 12V power source delivers current to the load – two LEDs with opposing polarity. The current is routed by the four mechanical switches in a 'H' shape

configuration. The state of the switches determines the polarity of current through the load. Diagonal pairs allow current to flow.[1] Note that two switches on the same 'leg' (left leg: S1 and S3, right leg: S2 and S4) should never be closed at the same time as this would short the circuit to ground – a 'shoot-through' error.

For the first modification in 'Fig. 2' the LEDs are replaced by a DC motor 'M1'. When the switches allow forward bias the motor is powered clockwise, and when reverse biased - anticlockwise.

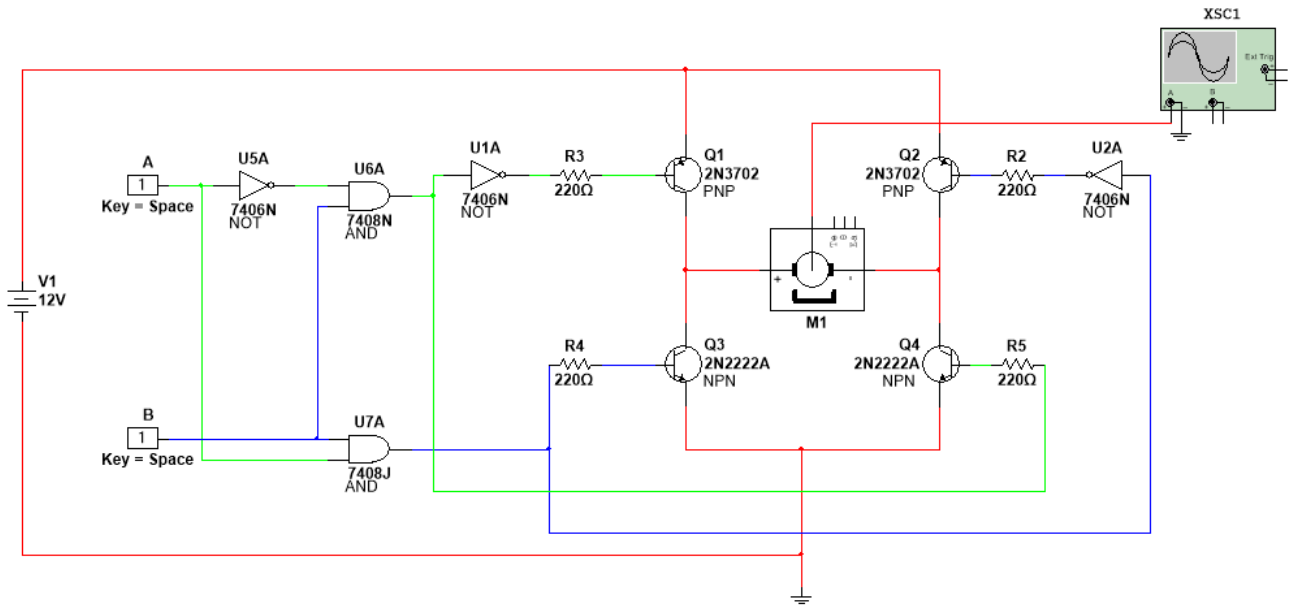

Fig. 2: Redesigned H-bridge circuit with digital switching system and bidirectional motor control

The use of four mechanical switches is impractical. To improve automation, the switches are replaced by four Bipolar Junction Transistors (BJTs) and a digital switching system is implemented.

The four transistors function as switches. Q1 and Q2 are PNP transistors, activated by a low signal to the base. Q3 and Q4 are NPN transistors, activated by a high signal to the base. Otherwise, current can not flow through collector – emitter; an open switch.[2]

A system of logic gates controls the signals to the bases. The wires in 'Fig. 2' have been colour coded for visualisation. There are three desirable states: motor runs clockwise, motor runs anticlockwise, and motor freewheels (off). In 'Fig.2' there are two switches, A and B. The logic system uses NOT and AND gates to create two control signals:

- Blue: controls transistors Q2 and Q3 for clockwise operation.
- Green: controls transistors Q1 and Q4 for anticlockwise operation

We know the motor is driven when diagonal transistor pairs are activated, so:

- Q1 and Q4 – driven by green signal, activated when green = 1
- Q2 and Q3 – driven by blue signal, activated when blue = 1

The final NOT gates U1A and U2A invert the signal into Q1 and Q2 accounting for the difference in high-drive NPNs and low-drive PNPs.

The following Boolean expressions describe the two signals:

$$GREEN = \bar{A} \cdot B$$

$$BLUE = A \cdot B$$

Hence, the truth table, 'Fig. 3', details all logic states.

A	B	$\bar{A} \cdot B$	$A \cdot B$	Q1	Q2	Q3	Q4	Operation
0	0	0	0	OFF	OFF	OFF	OFF	Off
0	1	**1**	0	**ON**	OFF	OFF	**ON**	Anticlockwise
1	0	0	0	OFF	OFF	OFF	OFF	Off
1	1	0	**1**	OFF	**ON**	**ON**	OFF	Clockwise

Fig. 3: Logic truth table

'Fig. 3' verifies the design. Only two cases power a diagonal transistor pair: A=0 , B=1 (anticlockwise) and A=1 , B=1 (clockwise). Two transistors on the same leg are never on at once: no static shoot through. Multisim simulation oscilloscope data is shown in below.

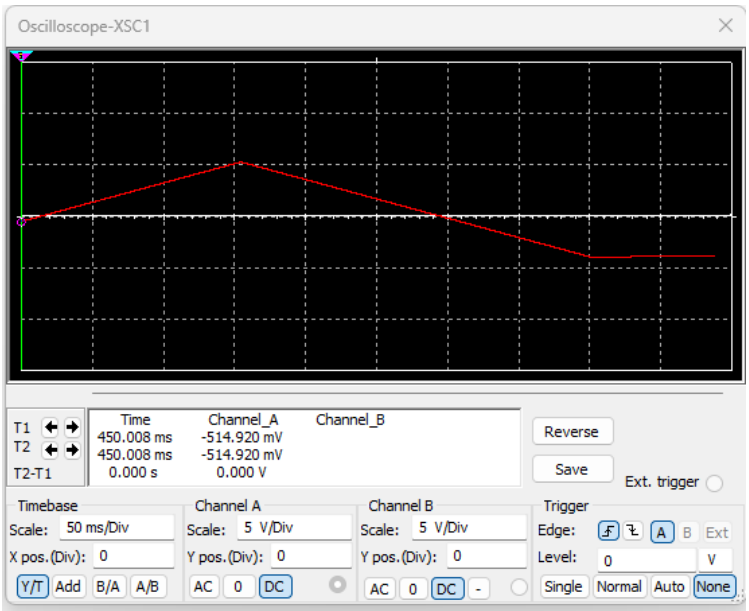

Fig. 4: Multisim simulation data for motor control operation

The voltage output is directly proportional to the angular velocity of the motor, so can be used to analyse motor operation. Initially the motor speed increases in the positive direction with input 1 , 1. Switch A is changed at 150ms, so: 0 , 1 input, reversing direction and the motor spins in the negative direction. At 400ms switch B

is also turned off (0 , 0) and the motor receives no drive. It remains at constant velocity because the shaft friction is negligible in this simulation.

In practical implementation of this circuit the main limitation is ‘dynamic shoot-through’. Although static shoot-through is prevented, the transistors take a non-zero amount of time to switch – specifically taking longer to turn off. This can cause a momentary short circuit[1], e.g. clockwise to anticlockwise, Q1 will turn on before Q3 has turned off – shorting the circuit. This results in brief pulses of large current leading to potential failure of the transistors. An improved logic system would have in-built delay – dead time – to ensure no overlap[3]. A motor is also an ‘inductive load’. As it turns off, the magnetic field dissipating creates a voltage spike exceeding the transistor breakdown voltage, destroying them. Flyback diodes should be used to reroute this inductive current.[4]

ii)

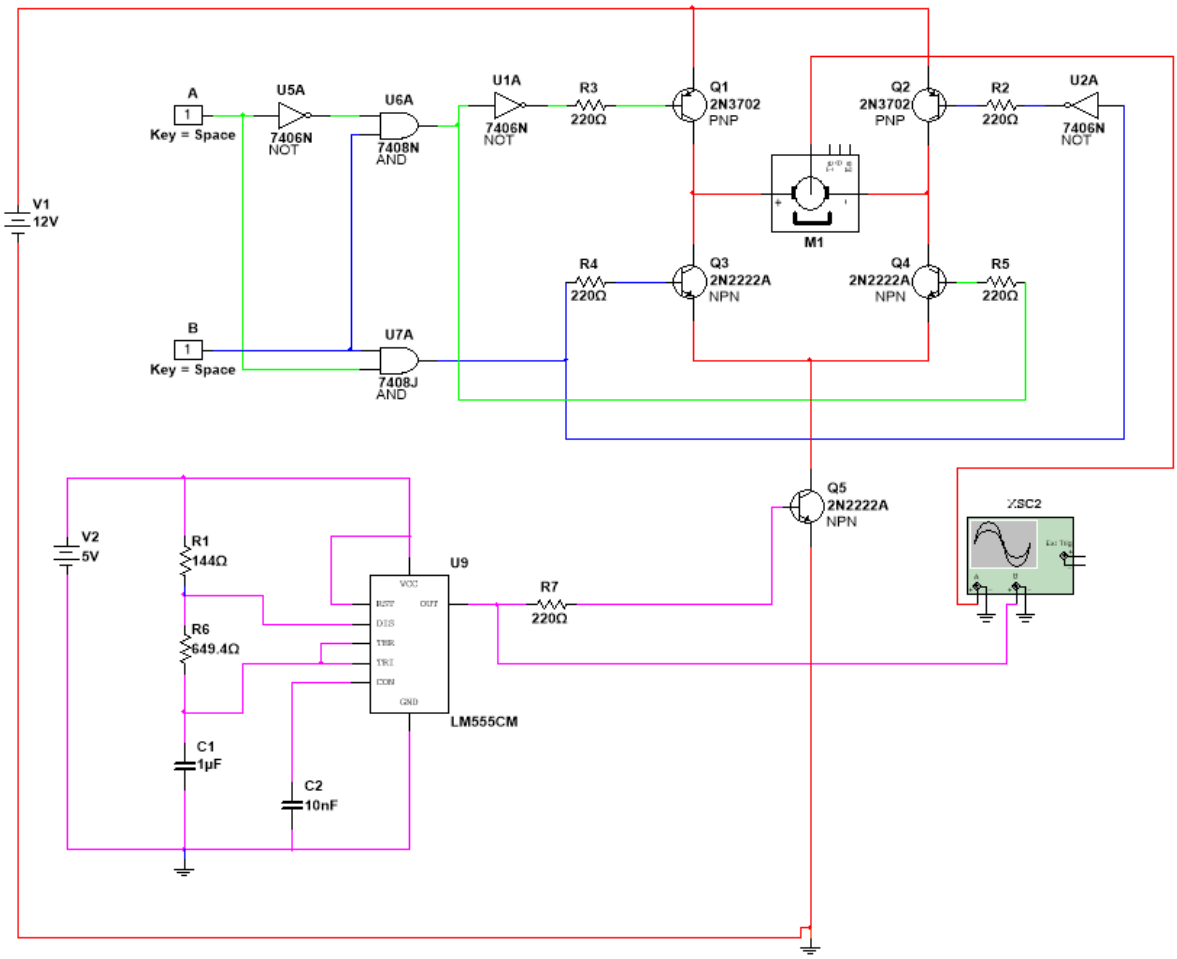

Fig. 5: H-bridge motor control circuit with integrated PWM oscillator

‘Fig. 5’ presents a modified version of the circuit, introducing a PWM voltage supply circuit (pink) with the aim of controlling motor speed. The PWM (555 timer in this case) outputs a square wave signal (0V – 5V) that activates the new transistor Q5. The ‘Duty Cycle’ is the percentage of time the signal is high (5V), as given in equation 1.

$$Duty\ Cycle\ D = \frac{t_{ON}}{T} \quad (1)$$

Where T is the time period, and t_{ON} is time of high signal. The duty cycle controls the average power received by the motor (equation 2). The motor responds to the average power produced by the high-low oscillations of the PWM circuit.[5]

$$V_{avg} = V_{supply} \cdot D \quad (2)$$

The PWM design in 'Fig. 5' uses an RC circuit that determines the square wave properties. It was designed for a duty cycle of 55% and frequency 1000Hz following equations 1 to 6 and with chosen capacitance C1 = 1μF.

$$f = \frac{1}{T} = \frac{1.44}{C(R_1+2R_2)} \quad (3)$$

$$T = t_{ON} + t_{OFF} = 0.693 \cdot C(R_1 + 2R_2) \quad (4)$$

$$t_{ON} = 0.693 \cdot C(R_1 + R_2) \quad (5)$$

$$t_{OFF} = 0.693 \cdot C \cdot R_2 \quad (6)$$

This circuit design works as intended and meets specified 1000Hz-1500Hz frequency. However, the duty cycle is fixed by the component values, to adjust motor speed the components would have to be physically replaced. For the desired speed control, the duty cycle should be variable from 0% to 100%. A potentiometer could replace R6 to adjust the RC timing circuit, varying the duty cycle. The issue then is that the frequency is no longer constant. In addition, as shown below, the duty cycle can only be varied from 50% to 100%: no low-speed control.

$$D = \frac{t_{ON}}{T}$$

$$D = \frac{0.693 \cdot C(R_1 + R_2)}{0.693 \cdot C(R_1 + 2R_2)}$$

$$D = \frac{(R_1 + R_2)}{(R_1 + 2R_2)}$$

So even as R1 approaches 0Ω the duty cycle becomes:

$$D = \frac{(0 + R_2)}{(0 + 2R_2)} = 50\%$$

The final circuit design ‘Fig. 6’ corrects this issue, allowing for full motor speed control and a small frequency variation inside the required range.

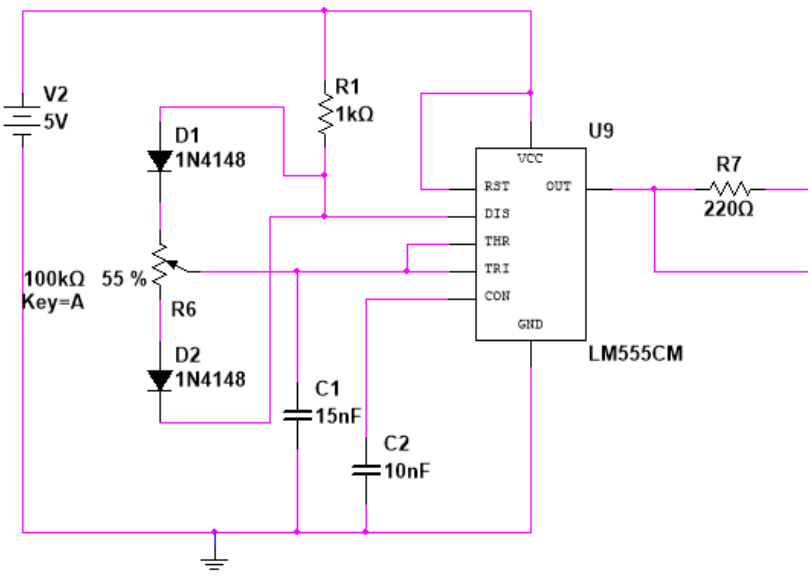

Fig. 6: Improved PWM oscillator design

Two 1N4148 diodes are utilised to separate the charging and discharging paths:

- Charge path (t_{ON}): current directed from VCC, through R1, into the potentiometer for charging.
- Discharge path (t_{OFF}): discharge current from C1 directed to the DIS pin of the timer through the opposite end of the potentiometer.

This allows for nearly ideal 1% to 99% duty cycle control: full adjustment of motor speed. The component value selection is verified by equation 3:

$$f = \frac{1.44}{15nF(100k\Omega\ + 2 \cdot 1k\Omega\ )} = 941.176..Hz$$

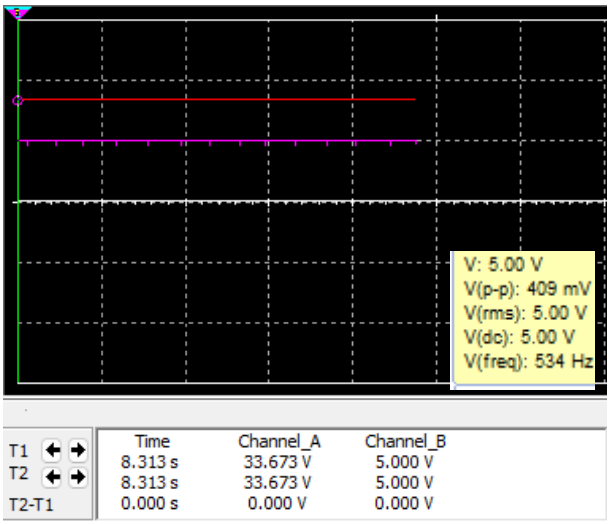

Fig. 7: Output data at 99% duty cycle

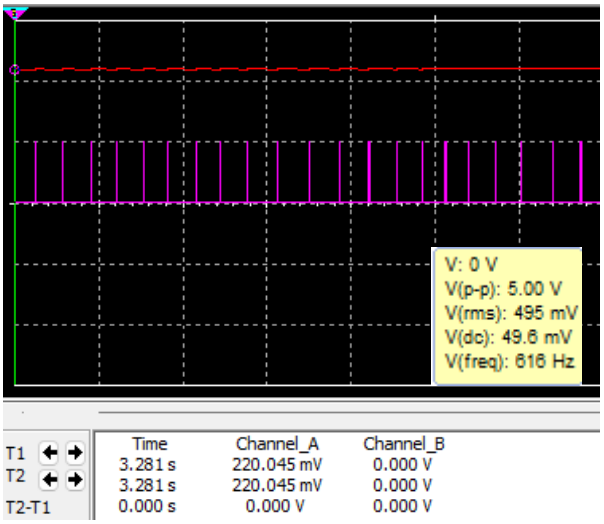

Fig. 8: Output data at 1% duty cycle

‘Fig. 7’ and ‘Fig. 8’ show the motor output at the extremes of the potentiometer, 99% duty cycle and 1% duty cycle, respectively. Once motor speed stabilises at its maximum, the full range of speed control is observed: 220mV to 33.7V. The actual frequency is lower than the theoretical expectation, varying between 530Hz and 620Hz. Likely due to the real-world characteristics of the diodes and 555 timer.

Note: motor shaft friction increased to 1e-4 Nms/rad otherwise the simulation ran too long, and motor accelerated indefinitely.

iii)

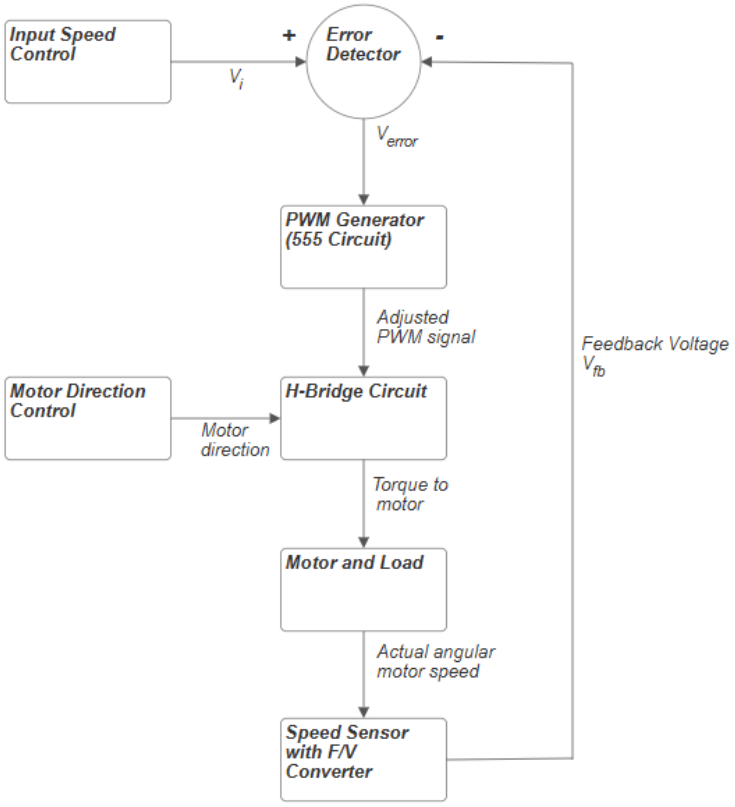

Fig. 9: Block diagram for closed loop speed control system

‘Fig. 9’ suggests how the circuit could monitor and account for load changes. This is known as a ‘closed-loop speed control system’[6]. The aim is to maintain the ‘actual motor speed’ close to the chosen input speed - set by V_i. A speed sensor (tachometer) measures actual motor speed, and then a frequency – voltage converter provides a ‘feedback voltage’ signal V_{fb}. The summing junction (e.g. a ‘differential amplifier’[7]) receives both V_i and V_{fb} calculating the difference: V_{error}. This feeds into the 555 PWM controller, adjusting the duty cycle to account for the error.[8] The average power supplied to the H-bridge and thus motor speed change, creating a continuous feedback loop, compensating for load changes.

Part B

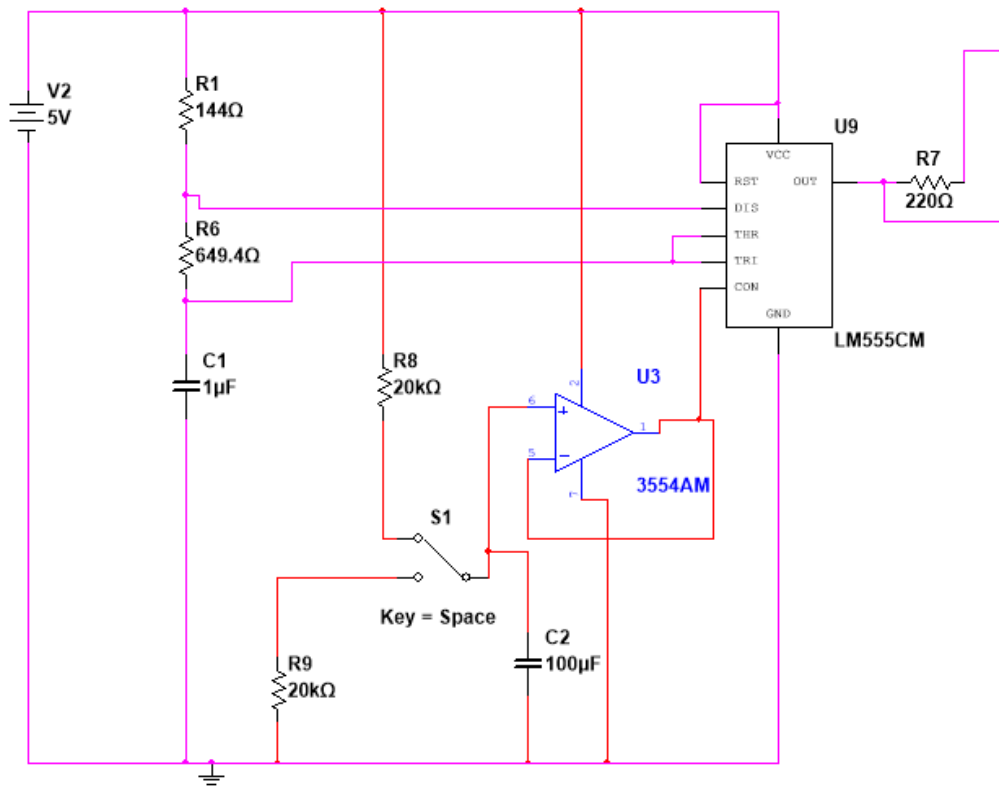

Fig. 10: PWM oscillator modified for voltage ramp up/down control

For practical use as an elevator motor the PWM timer circuit has been further modified in 'Fig. 10'. The motor must gradually accelerate / decelerate for passenger comfort. A 'Voltage Ramp Generator' circuit (red) generates a smooth DC ramp[9][10]: rising or falling over approximately 10 seconds. This feeds the control (CON) pin of the 555 timer, in turn ramping the duty cycle between 0% and 100%.

The PWM oscillator has been reverted to the fixed 1kHz frequency circuit for simplicity. The ramp generator is constructed with a 10 second RC timer. Component values are justified as follows:

- A capacitor fully (~99.3%) charges / discharges in 5τ (time constants)
- Thus: required time constant: 5τ = 10s , τ = 2s
- A large standard capacitor with capacitance = 100µF was chosen, so resistance is found:

$$R = \frac{\tau}{C} \tag{7}$$

$$R = \frac{2}{100\mu} = 20k\Omega$$

The SPDT switch S1 selects either the charging – 'ramp up' path or the discharging - 'ramp down' path through the R8 and R9 20kΩ resistors, respectively. This ensures a symmetrical 10 second ramp in either direction. So, for elevator operation: S1 is set

to ‘charge’ position, and the elevator accelerates. As the elevator approaches its destination S1 is switched to the ‘discharge’ position, causing deceleration to a stop.

Finally, the Op-amp U3 is incorporated as a ‘voltage follower’. It has a very high input impedance, so the small current that the CON pin draws cannot distort the 10 second timings, cleanly isolating the timing circuit from the PWM oscillator circuit.[11]

Voltage Ramp Up:

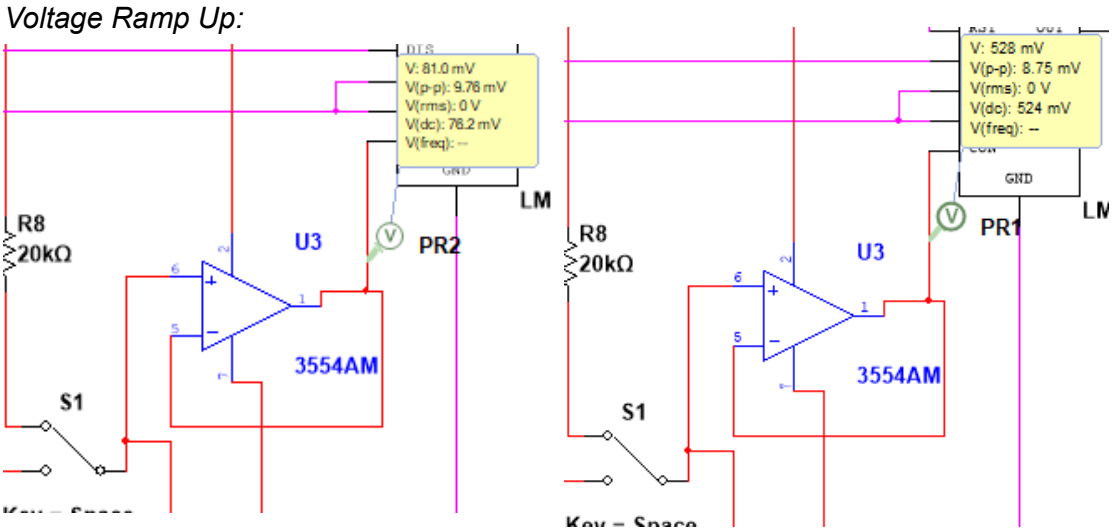

Fig. 11: Voltage ramp up output at time t=0 and t=0.45s

‘Fig. 11’ shows the voltage ramp up over approximately 0.45s. Simulating in Multisim for much longer than this is not feasible due to hardware / time constraints. The voltage input at the CON pin is shown to increase by 447mV in this time.

Voltage Ramp Down:

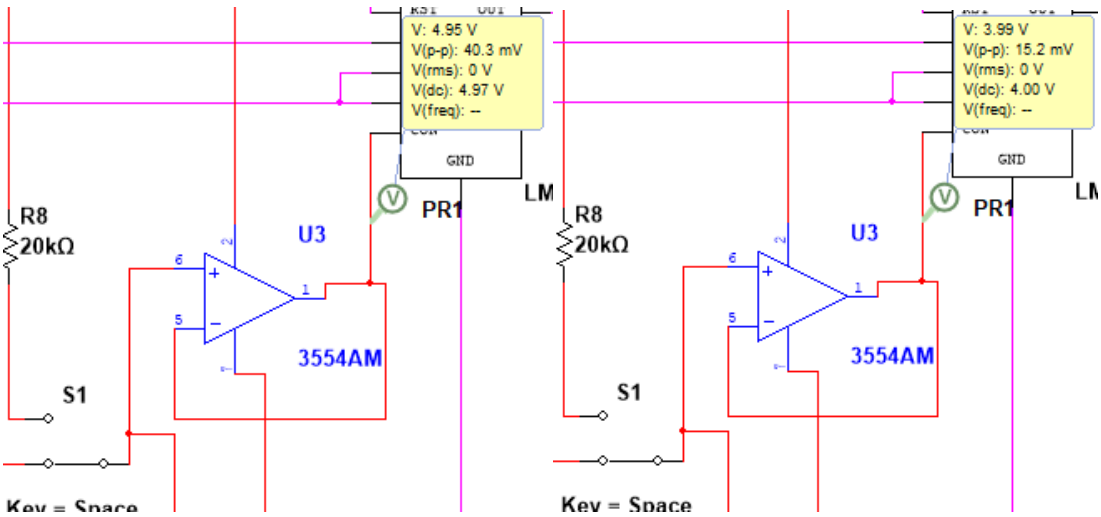

Fig. 12: Voltage ramp down output at time t=0 and

‘Fig. 12’ shows the voltage ramp down, also over approximately 0.45s This time the voltage decreases at a greater rate, falling by 900mV.

Assessing the accuracy of the 10 second acceleration time is difficult due to simulation limitations, and linear extrapolation is an inaccurate method. However,

these simulation results do verify that the voltage ramps up and down gradually, and the motor has controlled acceleration – not the case in previous circuits.

The main limitation of this circuit design for the elevator application is that it is an 'open loop'. There should be closed loop feedback as described in 'Part A, iii'. More people in the elevator, will affect the motor acceleration and speed with no method of correction. A tachometer and feedback loop should be used to constantly adjust the duty cycle.

Part C

Inter-departmental Collaboration

- **Mechanical Engineering:** Work must be done with a mechanical team to ensure motor power is suitable for cabin weight / load, desired speed etc. Torque / speed characteristics will be important for their calculations; e.g. material choices must be correct for the load cases.
- **Component Procurement:** Communication must be clear with a procurement team as circuit designs are dependent on availability / cost of components.
- **Finance:** A budget must be approved, so circuit design choices should be presented and justified to a finance department who would assess the circuits effectiveness in a business sense.
- **Legal / Health & Safety:** Would provide guidance to ensure the designs meet mandatory safety requirements and legal standards.

Sustainability, Ethics, and Risk Management

Elevator systems are energy intensive and often require 24/7 operation, increasing energy consumption and carbon footprint. One mitigation strategy is use of 'regenerative braking'. Waste energy is instead captured as electricity (e.g. when a heavily loaded elevator travels down) and is fed back to the grid – minimising net energy consumption.[12] Elevator components, both mechanical and electrical, should be designed for a long life-cycle to reduce waste. They should be recyclable where possible and must comply with the UK's Waste Electrical and Electronic Equipment, 'WEEE 2013' regulations.[13]

The core ethical consideration is passenger safety. Circuit failure such as H-bridge shoot through shorting the circuit could stop the motor suddenly. Similarly, Op-amp failure shorting to ground would cause the voltage ramp circuit to be bypassed, and the motor would instantly accelerate to full speed. Any component or circuit failure must be overridden by an independent safety system e.g. an 'overspeed governor'.[14] The whole system must comply with EN81-20 and EN81-50 safety standards.[15]

Non-Technical Presentation

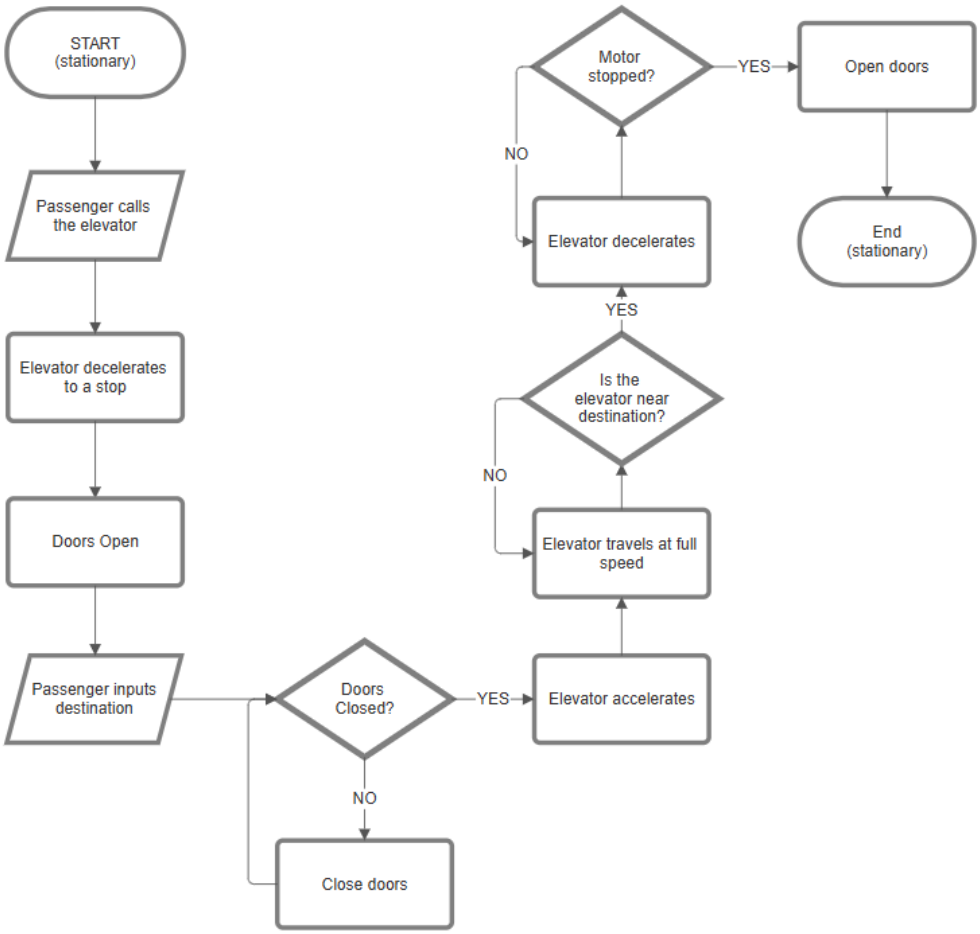

Fig. 13: Non-technical flow chart of elevator operation

The flowchart, 'Fig. 13' presents a simple overview of elevator operation. The 'decision' blocks represent the necessary safety checks:

- The motor must not receive power until the doors are closed.
- The doors must not open until the motor has fully stopped; the tachometer reads zero.

A third decision block was added to ensure the elevator doesn't overshoot its destination. By checking the distance from the destination, it can decide when to begin the deceleration voltage ramp and stop in the correct location.

Part D

The provided circuit with a PIR motion detector has been modified to reduce energy usage through implementation of an LDR, seen in 'Fig. 14 – 16'. A variable resistor represents the LDR, where 100% corresponds to 'maximum darkness'.

The circuit is now composed of two sections:

- The LDR circuit: a voltage divider - with R5 and R4 (LDR) - that uses the NPN transistor Q3 as a switch. Only on when dark.
- The PIR activated timer circuit: turns the light on when a person is detected (switch S1 is closed). An RC timer keeps it on for a short period of time.

The logic of the system requires the transistor Q3 and the switch S1 to act as an 'AND' gate, ensuring both must be true for the light to turn on. They are connected in series: if either is off the whole circuit breaks.

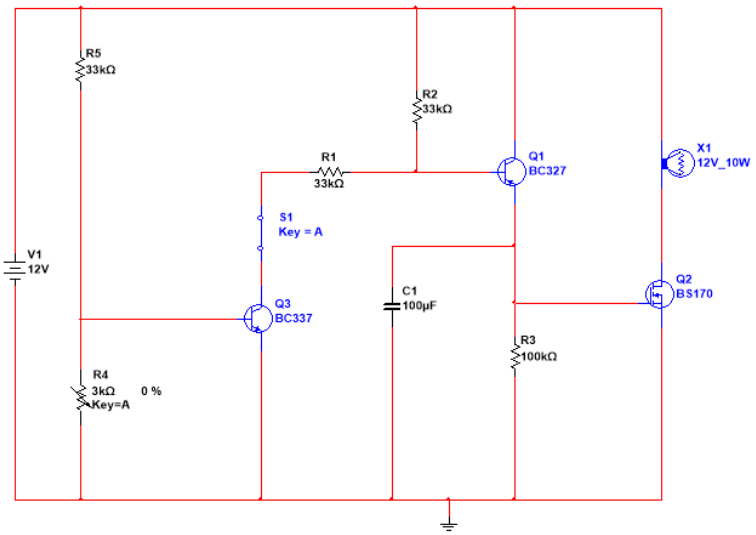

Fig. 14: LDR modified light control circuit under light conditions

'Fig. 14' simulates the circuit in daytime, light outside. The resistance R4 is low, so the voltage at the base of Q3 is too low to activate it (below 0.7V). Even with the PIR closed the light remains off.

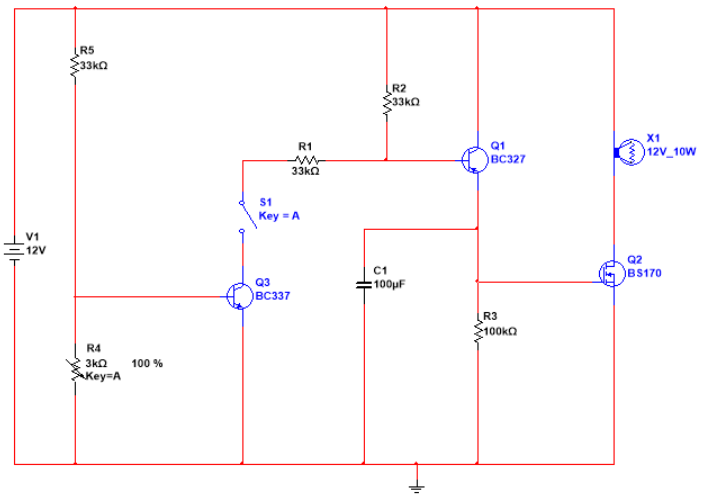

Fig. 15: LDR modified light control circuit under dark conditions and PIR open

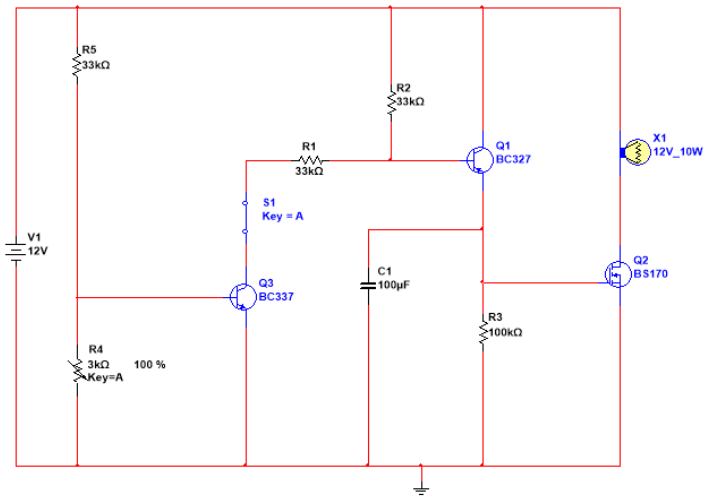

Fig. 16: LDR modified light control circuit under dark conditions and PIR closed

‘Fig. 15 and 16’ show the two different cases of the circuit in darkness. The resistance R4 is high, pulling Q3 base voltage high and activating it. Only with the PIR closed as well does the light turn on, fulfilling the AND gate condition. The addition of the voltage divider does not affect the timer circuit; the light then turns off approximately 10 seconds after the PIR opens.

It is important to note: the LDR must be mounted externally - outside. Otherwise, an ‘unstable feedback loop’ would be created. It is dark and a person enters: the AND gate is true, and the light turns on. However, the LDR would now detect the light. The AND gate breaks and the light turns off. This creates a constant cycle causing the light to flash on and off. The LDR must detect the ambient, outside, light only.[16]

Hardware Prototype:

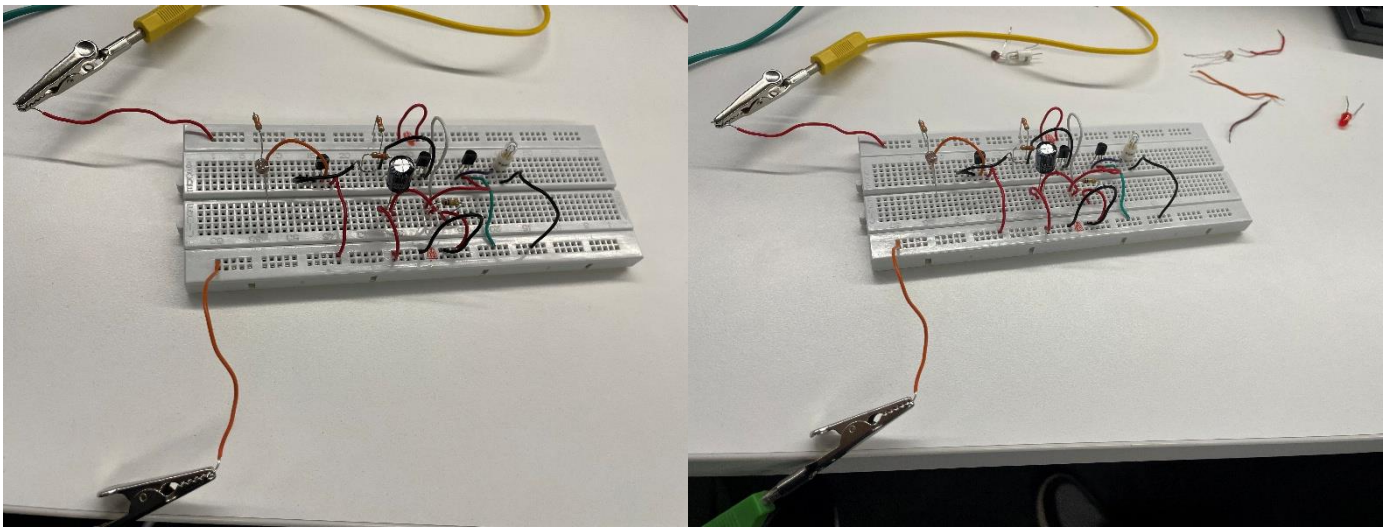

Fig. 17: Prototype hardware circuit

‘Fig. 17’ above is a prototype of this circuit design. It follows the exact layout of the Multisim circuit, though with an actual LDR instead of the variable resistor. This prototype is evidence that the design is a practical and cost-effective solution. The selection of a 33kΩ resistor R5 was influenced by prototype construction - it was a readily available resistor value.

Practical Limitations:

The darkness ‘threshold’ at which the light can turn on is set by the fixed resistor R5. This may not be at the ideal value all year round, depending on seasons, weather conditions etc. Replacing R5 with a variable resistor would allow an on-site engineer to calibrate the system to preference. Alternatively, if a more complex circuit is allowed, this process could be automated.

Conclusion

This report has worked through increasingly complex H-bridge DC motor control circuits, fulfilling the initial objectives. A PWM oscillator was designed to control the speed and acceleration of the motor. A sophisticated understanding of electronic components was developed in order to fully adjust the PWM duty cycle, using diodes and an Op-amp in original designs. Throughout the report real-world limitations were discovered, specifically dynamic shoot-through error in an H-bridge. If left ignored for practical implementation, the transistors would likely be destroyed. Multisim simulation helped to identify these limitations (e.g. PWM frequency variation even with diodes) whilst also providing its own limitations: simulation time taking far to long to verify circuit operation. This meant the report had to justify circuit design through solid presentation of theory and calculations. Part C was important to consider the role of circuit design in a wider company. Learning to balancing operation, cost, sustainability and ethics is key for real-world implementation.

References

[1] Anon, (2012). *H-bridge Control | Modular Circuits*. [online] Available at: https://www.modularcircuits.com/blog/articles/h-bridge-secrets/h-bridge-control/.

[2] Storr, W. (2025). *H-bridge Motor Circuit Basics for the Hobbyist*. [online] Basic Electronics Tutorials. Available at: https://www.electronics-tutorials.ws/io/h-bridge-circuit.html.

[3] Hertz, J. (2022). H-bridge DC Motor Control Using Complementary PWM, Shoot-through, and Dead-time - Technical Articles. [online] 29 Aug. Available at: https://www.allaboutcircuits.com/technical-articles/h-bridge-dc-motor-control-complementary-pulse-width-modulation-pwm-shoot-through-dead-time-pwm/.

[4] Anon, (2012). *Driving High Power Loads with H-bridge*. [online] Acroname. Available at: https://acroname.com/blog/driving-high-power-loads-h-bridge?srsltid=AfmBOooUSD2Flic2WfWirdXtqL3KBSi9uxiDtDfO4D2MfQi6ymODfCdB

[5] Electronics Tutorial (2018). *555 Oscillator Tutorial - The Astable Multivibrator*. [online] Basic Electronics Tutorials. Available at: https://www.electronics-tutorials.ws/waveforms/555_oscillator.html.

[6] Portescap.com. (2023). *Controlling DC Motor Speed in Closed Loop*. [online] Available at: https://www.portescap.com/en/newsroom/whitepapers/2023/06/controlling-dc-motor-speed-in-closed-loop.

[7] Electronics Tutorials (2013). *Differential Amplifier - The Voltage Subtractor*. [online] Basic Electronics Tutorials. Available at: https://www.electronics-tutorials.ws/opamp/opamp_5.html.

[8] Rust (2011). *F/V Converter in CLosed Loop Motor Speed Control System – Simple Circuit Diagram*. [online] Simplecircuitdiagram.com. Available at: https://www.simplecircuitdiagram.com/2262-fv-converter-in-closed-loop-motor-speed-control-system/.

[9] Neurochrome. (n.d.). *The Ultimate Guide to Soft Start Design*. [online] Available at: https://neurochrome.com/pages/the-ultimate-guide-to-soft-start-design.

[10] Google.com. (2008). *US8390263B2 - Soft-start circuit having a ramp-up voltage and method thereof - Google Patents*. [online] Available at: https://patents.google.com/patent/US8390263B2/en [Accessed 3 Nov. 2025].

[11] Keim, R. (2020). *Applications of the Op-Amp: Voltage Follower Circuit*. [online] www.allaboutcircuits.com. Available at: https://www.allaboutcircuits.com/video-tutorials/op-amp-applications-voltage-follower/.

[12] Columbus McKinnon. (2015). *Regenerative Elevator*. [online] Available at: https://www.cmco.com/en-us/products/power-and-motion-technology/elevator-drives/regenerative-elevator/ [Accessed 3 Nov. 2025].

[13] UK Government (2018). *Regulations: waste electrical and electronic equipment (WEEE)*. [online] GOV.UK. Available at: https://www.gov.uk/guidance/regulations-waste-electrical-and-electronic-equipment.

[14] Dazen. (2024). *Elevator Overspeed Governor: All You Need to Know*. [online] Available at: https://dazentech.com/elevator-overspeed-governor-all-you-need-to-know/.

[15] McPartland, R. (2017). *New standards for lifts (EN 81-20 and EN 81-50)*. [online] NBS. Available at: https://www.thenbs.com/knowledge/new-standards-for-lifts-en-81-20-and-en-81-50.

[16] Friendlywire.com. (2020). *FriendlyWire - Discover the joy of understanding electronics*. [online] Available at: https://www.friendlywire.com/tutorials/ldr/ [Accessed 3 Nov. 2025].