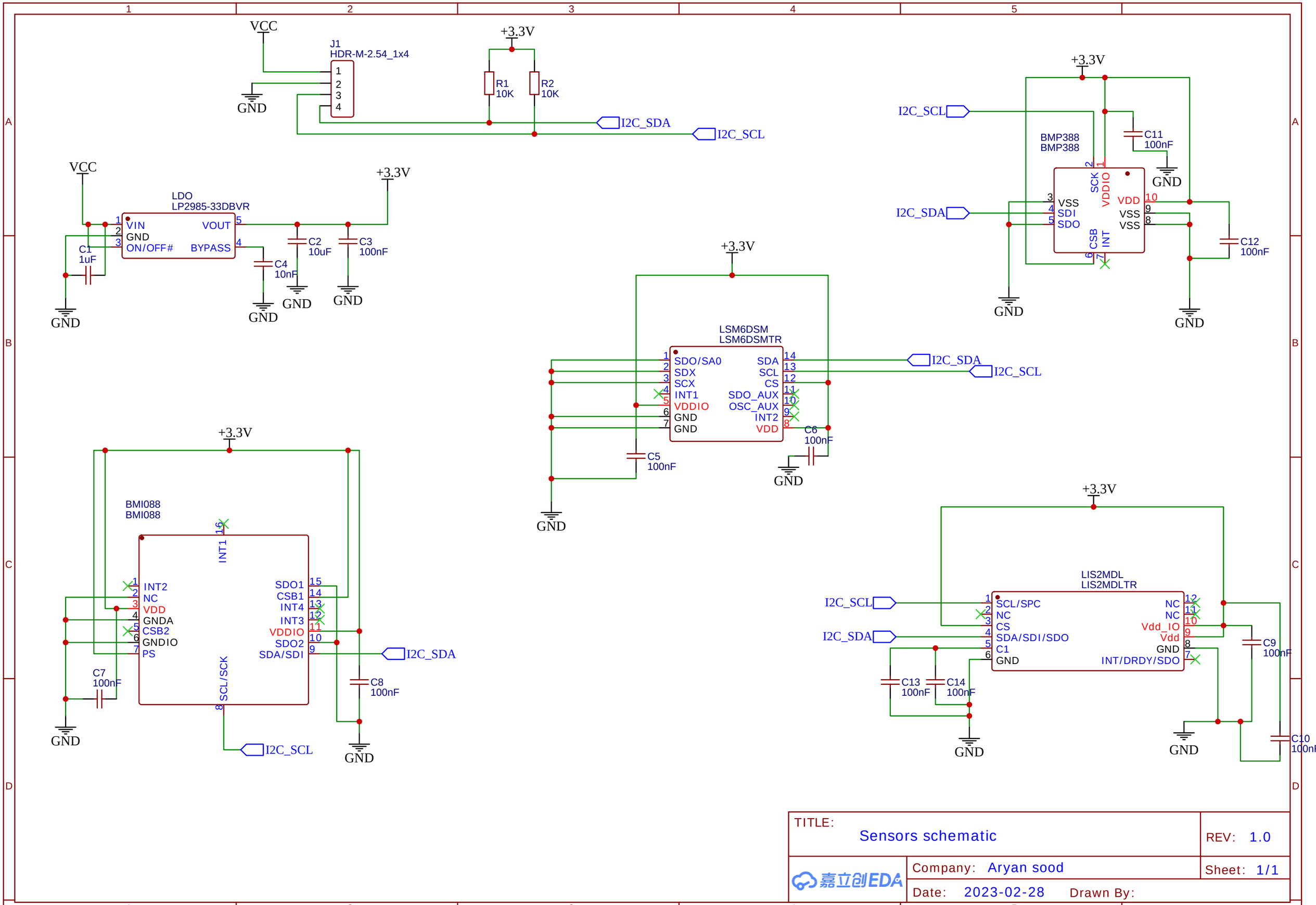

TITLE: Sensors schematic	REV: 1.0
嘉立创EDA	Company: Aryan sood
	Sheet: 1/1
	Date: 2023-02-28 Drawn By: