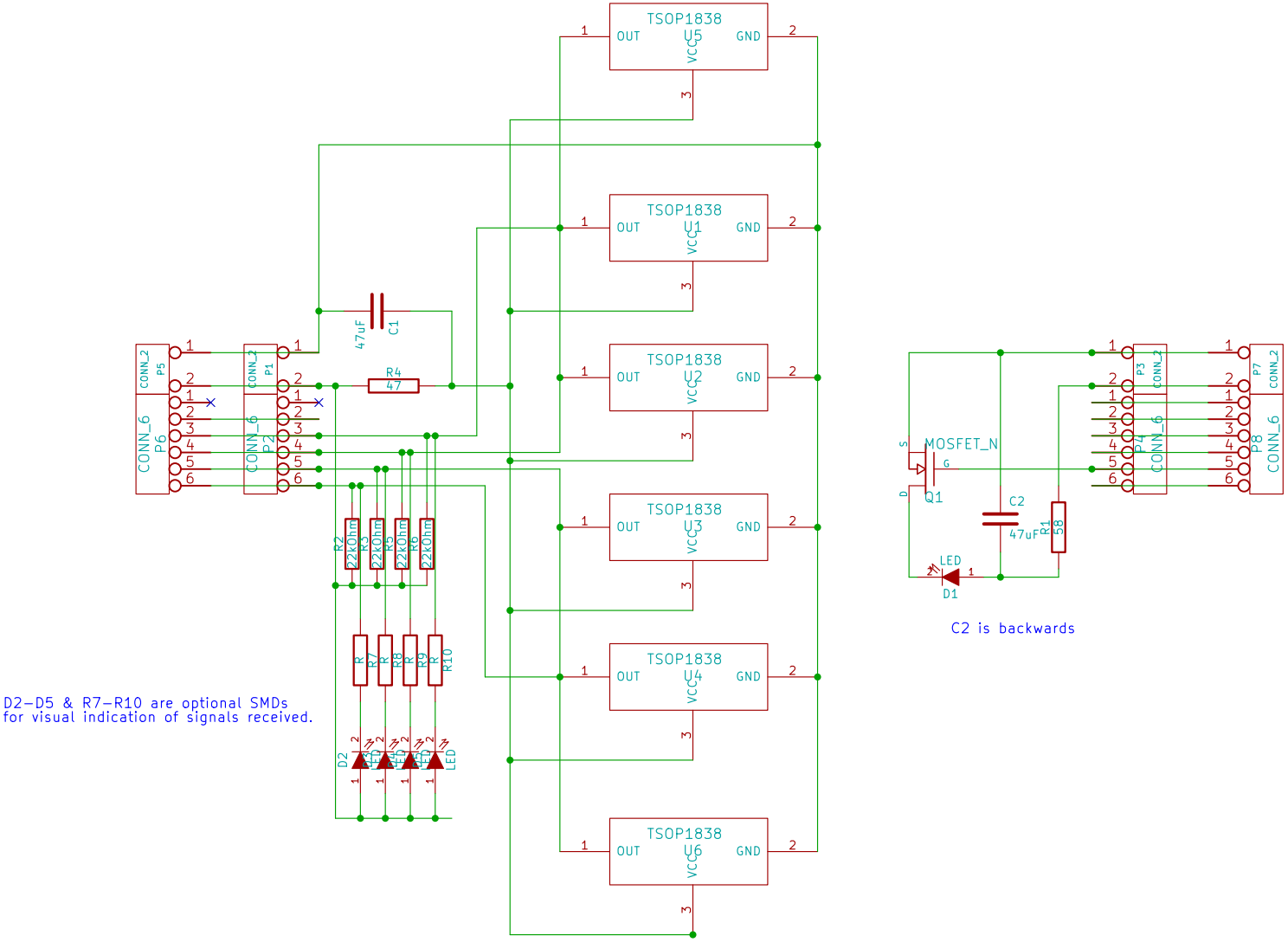

D2–D5 & R7–R10 are optional SMDs
for visual indication of signals received.

C2 is backwards

** NOTE: Extra IR receiver LEDs are on the board so they can be tested in different positions!
The outputs of U4 & 6 are connected together. Same with U2 & U5.

So only use ONE of each pair! They will not work with both LEDs in one pair connected!

File: swarmIR.sch		
Sheet: /		
Title:		
Size: A4	Date: 26 oct 2012	Rev:
KiCad E.D.A.		Id: 1/1