Preprint Version

Benchmarking Data Leakage and Generalization in Audio Classification: An Empirical Analysis

Rukshani Puvanendran
Department of ICT
University of Vavuniya
Sri Lanka
rukupuvan@gmail.com

Asanka P Sayakkara
University of Colombo School of Computing (UCSC)
Sri Lanka
asa@ucsc.cmb.ac.lk

Titus Jeyarathna
The MARCS Institute for Brain, Behaviour and Development
Western Sydney University
Westmead, NSW, Australia
titus.Jayarathna@westernsydney.edu.au

Roshan G Ragel
Department of Computer Engineering
University of Peradeniya
Sri Lanka
roshanr@eng.pdn.ac.lk

***Abstract*—Audio classification models are vulnerable to subtle forms of data leakage, which can lead to overly optimistic and unreliable performance results. This issue is particularly important in edge computing environments, where models are deployed on resource-limited devices and retraining after deployment is not practical. This study investigates data leakage, especially those related to data splitting and augmentation strategies. We propose a structured, leakage-aware evaluation pipeline that employs source-aware data splitting, followed by the application of data augmentation exclusively to the training set after partitioning. Using the UrbanSound8K benchmark dataset, our experiments show that neglecting this precaution can lead to up to a 25% inflation in model accuracy. These findings underscore the significant gap in generalization between naive and rigorously designed evaluation protocols. Our results emphasize the need for careful pipeline design to develop reproducible, trustworthy, and deployable audio classification models. To isolate and evaluate the impact of the pipeline design, we deliberately refrain from optimizing model performance, focusing instead on ensuring a fair and controlled comparison.**

***Index Terms*—Audio Classification, Data Augmentation, Generalization, Data Leakage, Reproducibility, Model Integrity**

I. Introduction

Sound classification systems play a vital role in modern environmental research and conservation, supporting tasks ranging from wildlife monitoring to urban soundscape analysis [1], [2], [3]. These systems increasingly leverage advances in machine learning (ML) and deep learning (DL), particularly within the fields of ecoacoustics and bioacoustics. Such advancements are especially significant for resource-constrained deployments involving embedded and edge AI systems, where both efficiency and accuracy are critical [4]. Evaluating ML and DL models in these contexts aims to provide an unbiased assessment of performance, with particular focus on generalization to previously unseen data [2], [5]. In standard experimental procedures, the dataset is divided into separate subsets for training, validation (used for hyperparameter optimization), and testing (used for final performance evaluation) [6]. Although the methods for splitting validation and test sets can differ, it is a widely accepted practice that the test data must be entirely independent from any data involved in training or validation [2], [3]. Maintaining this separation is essential to prevent biased performance results and to ensure that evaluation metrics accurately represent the generalization capability of the model [7], [8].

However, even though it is widely agreed that data splits should not overlap, in many cases, the process is either flawed or not clearly explained. The malpractices violate the assumption that training, validation, and test sets must remain independent and identically distributed [2], [9], [11]. This oversight can lead to inadvertent data leakage, where samples appear in both the training and testing sets, thereby compromising the reliability and integrity of the evaluation [3], [5], [9]. This phenomenon influences the training process, leading to overly optimistic performance metrics [9]. This often results in misleading accuracy results that do not reflect real-world performance [2]. As a result, models may perform well during evaluation but fail to generalize to real-world scenarios. Identifying and avoiding such leakage is essential to ensure fair model assessment and trustworthy deployment [7], [8]. Common forms of data leakage includes in the feature level(pre-processing and feature engineering), split level (subject/instance leakage) and dataset creation level [9], [11].

However, a central challenge in this domain remains the limited availability of annotated audio data, often referred to as the low data scenario [4]. Furthermore, small datasets exacerbate the effect of leakage [11]. The data leakage is indeed a widespread problem and has led to severe reproducibility failures in small samples [3]. Publicly available datasets such as ESC-10, ESC-50 [1], and FSC22 [4], while widely adopted, are relatively small in size and exhibit high

979-8-3315-7036-1/25/$31.00 © 2025 IEEE

variability across classes, leading to suboptimal performance and poor generalization of DL models. The scarcity and heterogeneity of these datasets significantly hinder the training of robust and generalizable models [7].

To combat the limitations of small sample size, researchers have increasingly relied on data augmentation, a widely adopted strategy in ML and DL to artificially expand dataset size and diversity [12]. Augmentation not only improves model accuracy but also enhances robustness and generalization by introducing variability during training [12], [13]. These techniques have become standard practice in contemporary sound classification pipelines and plays a pivotal role in low-data classification systems [4], [13]. Nevertheless, despite its importance, the improper application of augmentation has introduced a critical and underexplored methodological flaw in many existing studies leading to feature-level data leakage in audio classification [9], [10]. Specifically, the common practice of applying augmentation prior to dataset splitting inadvertently leads to data leakage, where multiple augmented variants (or augmented twins) of the same original sample appear across both training and testing subsets. This violates the assumption of data independence between these subsets and compromises the integrity of model evaluation, often resulting in inflated performance metrics that do not reflect true generalization capability [2].

Although these data leakage has received increasing attention, the sources of leakage remain underexplored in the context of sound recognition. In most of the existing literature, a prevalent shortcoming is the improper handling of the preprocessing pipeline, which is often overlooked despite being evidenced by empirical studies. Proper pipeline design is crucial to prevent subtle but severe forms of data leakage and to ensure the integrity, reproducibility, and generalizability of audio classification systems [9], [10].

In this study, we address this critical oversight by revisiting the flawed experimental design. Through rigorous experimentation on benchmark datasets such as UrbanSound8K, FSC22 and evaluation using DL models, we demonstrate the extent to which improper practices inflates performance. Our findings underscore the necessity for rigorous pipeline design to enable valid model evaluation and ensure reliable deployment in real-world settings. Furthermore, this study does not aim to enhance model accuracy or optimization, but rather to critically evaluate the integrity and validity of the experimental procedures.

II. Related Works

Recent efforts in the ML community have stressed the need for transparent experimental protocols and reproducible pipelines [3], [6], [10]. Nevertheless, there is a lack of consensus on standardized methodological workflows in audio classification, with many papers neglecting clear explanations of when and how each phase is applied [2]. Researchers must therefore adopt rigorous methodological frameworks, particularly when working with small sample sizes, to minimize the risk of leakage [3]. A proper methodological pipeline ensures true generalization and robust performance evaluation. The issue of data leakage has been widely acknowledged in ML and DL, particularly in image data, tabular data and time-series analysis [3], [6], [11]. Yet, the implications of this issue remain underrepresented in the audio community, despite its serious impact on the validity of performance metrics.

The various types and subtypes of data leakage are comprehensively discussed in [9], with general cases including leakage during preprocessing, data curation leakage, and split-level data leakage. One prominent source of leakage arises when source information and data duplication are overlooked during dataset construction and partitioning. As emphasized by [9], and further elaborated in [6], [11] data leakage exhibits domain-specific variations, making its identification and prevention a context-sensitive task.

A fundamental source of leakage lies in applying preprocessing and feature engineering operations such as feature selection and dimensionality reduction, on the entire dataset prior to splitting. Another critical concern in audio classification is subject leakage, which often leads to weak contamination, an unintended overlap of contextual or environmental cues between training and testing samples. It commonly occurs when audio clips from the same recording session, location, or device are distributed across different data splits. Many audio datasets, contain such overlapping environments or recording setups, making them particularly vulnerable. This subtle form of contamination can result in deceptively high performance metrics [2], [11]. In particular, three interconnected factors contribute to split-related leakage: the task definition, the dataset construction, and the split strategy. Mishandling any of these factors can lead to one or more forms of data leakage [9].

Transparent preprocessing is essential to ensure reproducibility and accurate model evaluation [10]. In the context of audio classification, most studies not disclosing the exact augmentation pipeline used, making it difficult to assess the true generalization capability of the models [7].

A study [6], reported the risk of data leakage in medical image analysis, where the construction of 2D slices from 3D volumes compromised the integrity of model evaluation. A recent meta-review identified eight distinct types of data leakage that compromise the validity of ML experiments: (1) absence of a separate test set, (2) joint preprocessing on training and test sets, (3) joint feature selection, (4) duplicated data points, (5) inclusion of illegitimate features, (6) temporal leakage, (7) non-independence between training and test data, and (8) sampling bias [3]. These forms of leakage often result in artificially inflated model performance, thereby undermining the reproducibility and generalizability of reported findings.

The authors in [14] investigated the impact of incorrect standardization procedures across multiple ML methods applied to well-established intrusion detection datasets. Their study emphasizes the importance of the chosen ML paradigm in determining whether a given practice results in data leakage. Further, the study [2] has revealed critical issues of data leakage caused by duplicate audio recordings appearing across

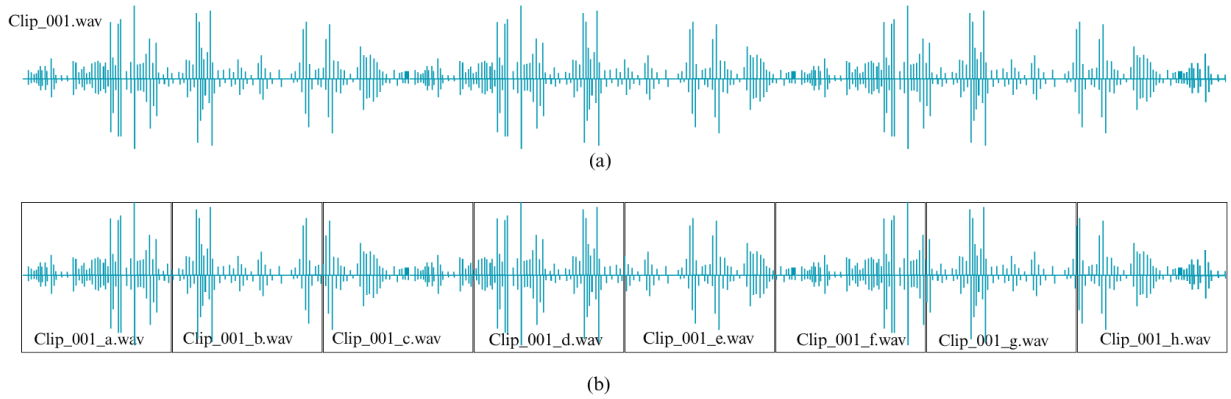

Fig. 1. The conventional audio segmentation (a) Original audio file. (b) Segmented audio samples obtained from the original recording; segmentation is performed using techniques such as truncation, overlapping, and padding to prepare the data for further processing and analysis.

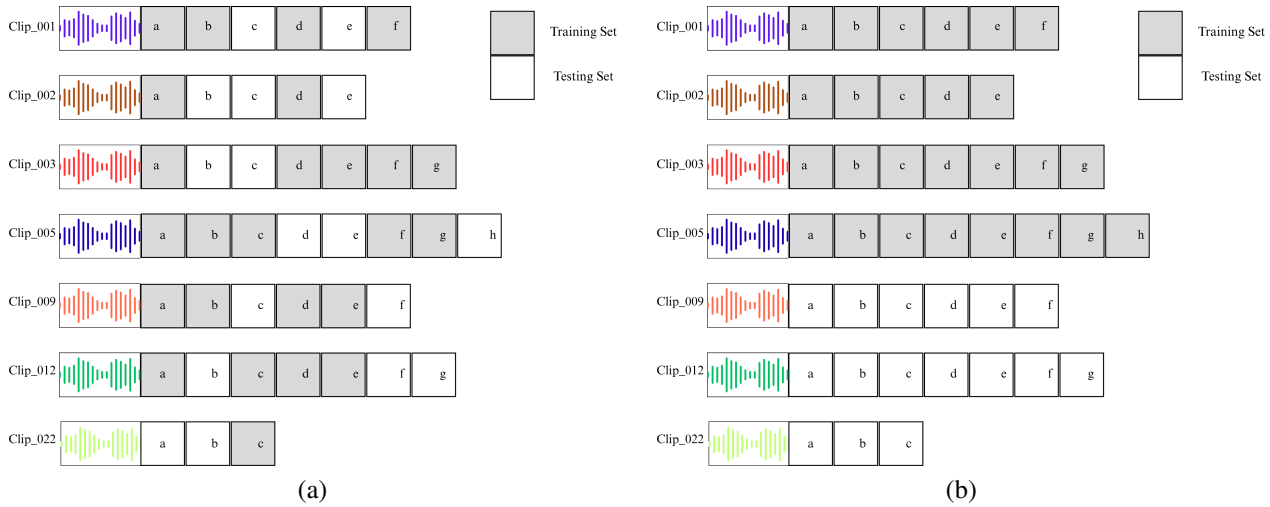

Fig. 2. Data splitting strategies: (a) Conventional split, where samples are divided into training, validation, and test sets without considering their source; (b) Source-aware split, where data is partitioned based on source identity to better evaluate model generalization to unseen sources.

training and evaluation sets, resulting in overly optimistic performance scores. These duplicates were identified using off-the-shelf audio fingerprinting tools, to find matching audio recording pairs. To address this, they introduced two new data partitions: a cleaned split that eliminates direct leakage by grouping duplicates together, and a group-filtered split designed to prevent weaker contamination effects caused by recordings with similar acoustic contexts, such as those from the same session.

Although some forms of leakage, such as feature and subject leakage, consistently inflate model performance, others may not always yield such effects. Encouragingly, the negative impact of leakage can often be mitigated by employing larger sample sizes and multiple train-test splits. To proactively prevent leakage, it is recommended to develop a predefined experimental protocol that explicitly outlines the methodology [3], [11]. Thus, understanding how prediction performance may be affected by different forms of data leakage remains an important and underexplored research question. Given the wide range of potential leakage scenarios, it is not feasible to empirically examine every type within a single study. Therefore, this work specifically focuses on two broad and representative categories: preprocessing-related (feature-level) and split-related (subject-level) data leakage. To support reproducibility and facilitate fairer model evaluation, we introduce a structured and leakage-aware evaluation framework, By systematically comparing pipelines. The following section describes the dataset, experimental setup, and the design of the five comparative pipelines used to assess the impact of data leakage under various conditions.

III. Methodology

A comprehensive assessment was conducted by constructing multiple pipeline configurations that vary in the sequence and placement of data augmentation and dataset splitting strategies. The objective is to investigate how these strategies affect model generalization and the validity of performance metrics.

A. Data Acquisition

We have chosen the UrbanSound8K dataset to evaluate the effect of data leakage in the audio classification pipeline.

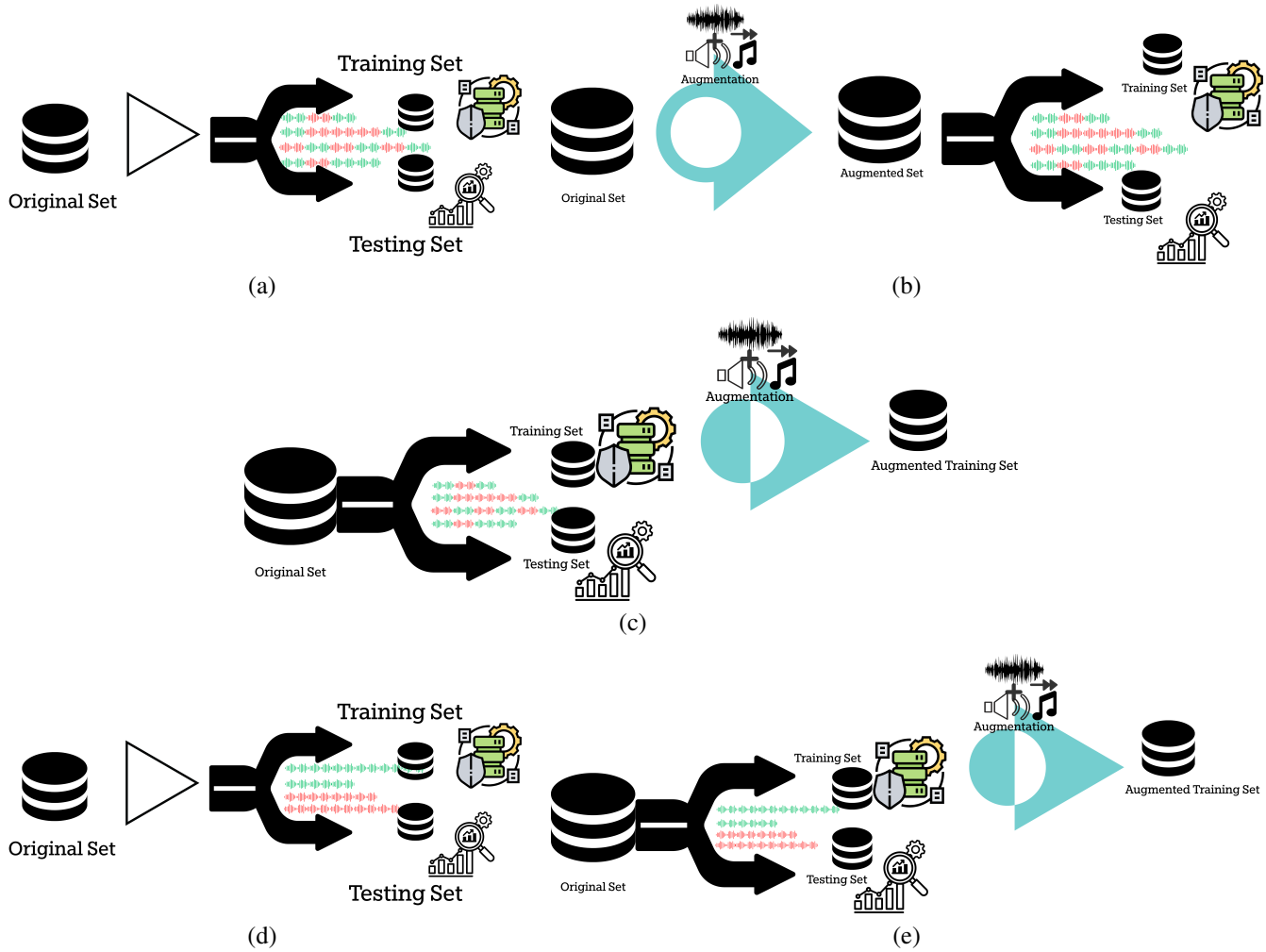

Fig. 3. Overview of the five experimental pipelines designed to evaluate the impact of data augmentation and segment-level source-aware splitting on model performance: (a) Pipeline A – Baseline random 80:20 train-test split with `RANDOM_SEED = 42`; (b) Pipeline B – Pre-split augmentation applied before dataset splitting, allowing potential overlap of augmented samples across training and testing sets; (c) Pipeline C – Post-split augmentation applied only to the training set, maintaining strict test set independence; (d) Pipeline D – Source-aware segment-level split where all segments from the same original audio file are assigned to a single set to prevent data leakage; (e) Pipeline E – Combines source-aware splitting with augmentation restricted to the training set for the most robust and realistic evaluation of generalization performance.

The UrbanSound8K dataset consists of 8,732 labeled sound excerpts, each with a duration of four seconds or less. These audio samples are categorized into 10 distinct classes. The dataset is organized into ten folds to facilitate reproducibility and standardized evaluation [15].

B. Controls Against Data Leakage

To ensure the methodological soundness of our experiments, we analyzed a range of known forms of data leakage (augmentation, data spliting protocols) with different pipelines. In audio classification and detection tasks, it is common practice to segment long audio recordings into fixed-length clips. This process often results in multiple segments originating from the same source audio file as shown in Fig. 1. If these segments are randomly split across training and testing sets, the model learns the audio similar in background, speaker continuity of the training set. Hence a proper spliting strategy would mitigate the risk of background continuity or speaker-specific patterns being exploited by the model. Fig. 2 illustrates various strategies associated with split-level data leakage. Specifically, Fig. 2(a) highlights the potential risk of leakage during dataset splitting, while Fig. 2(b) presents a feasible solution to mitigate this issue by enforcing proper partitioning protocols.

To assess the impact of data leakage practices, we designed five experimental pipelines with different data spliting and augmentation strategies as shown in Fig. 3. For Pipeline D and Pipeline E, the training and test set were carefully split, by considering the original file name by using the metadata of the dataset, so that no two audio from the same original file will not fall into distinctive sets.

C. Dataset Preparation

To ensure a reliable and consistent evaluation, the datasets were partitioned into training, validation, and testing subsets. An initial stratified split of 80:20 was applied to divide the data into training and testing sets. Subsequently, the training

data was further divided into training and validation sets using a 90:10 ratio. In this study, we employed two widely used audio data augmentation techniques in Pipeline B, Pipeline C, and Pipeline E. These involved applying positive and negative pitch shifts of ±2 semitones.

D. Model Training and Evaluation

The Mel spectrogram was used as the input to ensure compatibility with deep learning models, the spectrogram was converted into a 3-channel image by stacking different Mel-scale representations. For model evaluation, a Convolutional Neural Network (CNN) architecture was developed, drawing inspiration from the work of Bandara et al. [4]. Although the classifier selected for the task is not state-of-the-art, they were chosen to emphasize the impact of the preprocessing pipeline. intentionally chosen to highlight the impact of the preprocessing pipeline. It is also important to note that the goal of these experiments is not to achieve performance with advanced systems, but rather to emphasize the differences in performance between pipelines and to reveal the impacts of data leakage and generalization gap.

To ensure a robust evaluation, we employed a 5-fold stratified cross-validation strategy on the training set. Stratification ensured class balance across folds, which is particularly important in scenarios with imbalanced class distributions. After training, we retained all five models obtained from cross-validation and constructed an ensemble model by averaging the softmax output probabilities of the individual models. The ensemble prediction was computed as the class with the highest averaged probability. This approach helps mitigate variance across folds and improves generalization performance. The ensemble model was evaluated on both the validation and test datasets to assess its performance and generalizability. Finally, we trained a single final model on the entire training set using the same architecture and hyperparameters. This final model was also evaluated on the test set to compare its performance with that of the ensemble approach.

IV. Results and Discussions

This section presents a comparative analysis of classification performance across five distinct pipelines (A, B, C, D, and E) evaluated on the UrbanSound8K dataset. Performance was assessed via test set confusion matrices under three experimental settings: (1) cross-validation metrics (mean accuracy and F1-score), (2) ensemble model performance on validation and test sets, and (3) final model performance on the test set. Table I presents a comparative evaluation of different pipelines applied to the UrbanSound8K dataset, highlighting how various data splitting and augmentation strategies affect model performance.

Pipeline A demonstrated relatively low performance across all evaluation metrics, with an test accuracy of 75.27% on the final model evaluation. This suggests that the model has difficulty in distinguishing between different classes and fails to learn clear decision boundaries, which implies that the model has not developed meaningful representations for those categories. This suboptimal performance highlights the intrinsic complexity and limited diversity of the dataset. Pipeline A is thus considered the baseline for comparison in this study. Given that the test set remained identical across Pipeline A and Pipeline C. This technique allowed for a controlled and fair comparison of how each preprocessing approach influenced the model's generalization to unseen data.

In contrast, Pipeline B achieved the highest performance across all other pipelines, with the final model achieving a test accuracy of 94.05%. This pipeline violates the fundamental principle that the test set should represent unseen data, and thus, these metrics do not represent true model generalization. This inflated performance is due to the presence of augmented versions of the same audio in both training and test sets. However, they are invalid for any realistic deployment or benchmark comparison, stemming from a significant data leakage issue and lead to over-optimistic results in terms of real-world generalization.

Pipeline C achieved the highest cross-validation scores 93.36% accuracy, indicating excellent performance during internal evaluation. However, it yielded relatively low test performance (87.01% accuracy), suggesting augmented samples were not generalizable to the unseen test set for the final model. This discrepancy highlights a generalization gap, and this approach is significantly more reliable estimate of real-world performance than Pipeline B. This suggests that the methodological change in Pipeline C, such as applying augmentation after data splitting to avoid leakage, contributed to a more robust model with better generalization performance.

Similarly, a controlled comparison is made in Pipeline D and Pipeline E. Importantly, both pipelines were evaluated on the same source-aware partitioned test set, allowing for a fair comparison of how well each model generalizes to completely unseen audio sources. Pipeline D performed poorly across all evaluation stages. The test F1-score dropped to 55.65% and accuracy to 56.21% on the final model, relative to Pipeline A and Pipeline C. This shows that strict generalization without leakage remains a challenge.

Although the Pipeline E slightly improved over Pipeline D but still underperformed relative to Pipeline A and C, with the final model accuracy of 60.68%. Further, the results emphasize that data augmentation is beneficial, its application must be carefully controlled to avoid data leakage as shown in Pipeline B, Pipeline C and Pipeline E. Therefore, Pipeline E offers a balanced tradeoff between performance and experimental rigor, making it the most suitable for evaluating generalization in real-world settings.

Further, this study underscores the challenge of generalizing to new audio environments, highlighting the need for future research in domain adaptation, transfer learning, and enhanced data diversity. While the current work provides valuable insights into the impact of data leakage on model evaluation, it is important to recognize limitations due to the relatively small dataset and model complexity. To address the limitation posed by the relatively small dataset, extensive experiments were carried out using the FSC22 dataset to assess

TABLE I
PERFORMANCE COMPARISON ACROSS DATA PIPELINES IN URBANSOUND8K

Pipeline	CV Acc.	CV F1	Val. Acc. (Ens.)	Val. F1 (Ens.)	Test Acc. (Ens.)	Test F1 (Ens.)	Test Acc. (Final)	Test F1 (Final)
A	81.61	81.59	87.98	87.95	87.12	87.15	75.27	75.39
B	91.35	91.36	96.28	96.28	95.95	95.96	94.05	94.06
C	93.36	93.37	91.56	91.52	89.75	89.76	87.01	87.03
D	83.07	83.06	78.49	78.42	67.14	66.73	56.21	55.65
E	94.11	94.11	80.05	79.83	71.84	71.70	60.68	59.55

CV: Cross-validation mean; **Val.** Validation set; **Test** Test set; **(Ens.)**: Ensemble Model; **(Final)**: Final single trained model

the methodological soundness of different pipelines [4]. The evaluation also examined the impact of datasize on the models' ability to generalize, while upholding methodological rigor.

The findings reveal that the source-aware splitting strategy adopted in Pipeline E effectively prevents data leakage, validating it as a leakage-free pipeline. Despite variations in dataset size, results consistently showed a significant generalization gap between pipelines due to the presence of data leakage.

In summary, this study highlights the susceptibility of conventional evaluation protocols to data leakage and also reinforces the critical importance of adopting leakage-aware strategies in audio classification tasks. The comparative evaluation between Pipeline A and Pipeline D illustrates that even modest architectural setups can show inflated performance when evaluated under random splits. Conversely, the consistent drop in performance under source-aware splits signals a more realistic estimate of model generalization. These findings emphasize that careful consideration of data splitting strategies is essential when benchmarking models for real-world deployment, particularly on edge devices where robustness and reliability are paramount. Ultimately, ensuring methodological rigor through leakage-aware design enhances the scientific integrity and practical trustworthiness of ML models deployed in dynamic, unseen audio environments.

V. CONCLUSION

This study highlights that performance evaluation in audio classification is highly sensitive to subtle forms of data leakage. Understanding the relationship between task-specific design and data leakage is critical for mitigating risks and ensuring the robustness of machine learning applications. The lack of meticulous consideration in data preprocessing, feature selection, and model evaluation can lead to the unintentional inclusion of forbidden information during model training, compromising performance evaluation, which can lead to misleading conclusions about model generalizability. Our work addresses this gap by explicitly defining and evaluating multiple pipeline configurations, including source-aware and post-split augmentation strategies, to provide a more realistic and robust assessment. Using the UrbanSound8K benchmark dataset, our experiments show that neglecting this precaution can lead to up to 25% inflation in model accuracy. This analysis underscores that methodological rigor in dataset splitting and augmentation strategy is paramount for obtaining valid and generalizable results. Ultimately, developing models that can generalize to entirely unseen audio sources remains an open challenge and a key direction for future research in environmental sound classification. We plan to broaden the range of data augmentation strategies to include more diverse and adaptive techniques, enabling a deeper understanding of their impact using more advanced baseline models on model robustness and generalization across different model complexities.

REFERENCES

[1] K. J. Piczak, "ESC: Dataset for environmental sound classification," in *Proceedings of the 23rd ACM International Conference on Multimedia*, 2015, pp. 1015-1018.

[2] Weck, Benno, and Xavier Serra. "Data leakage in cross-modal retrieval training: A case study." In ICASSP 2023-2023 IEEE International Conference on Acoustics, Speech and Signal Processing (ICASSP), pp. 1-5. IEEE, 2023.

[3] Kapoor, Sayash, and Arvind Narayanan. "Leakage and the reproducibility crisis in ML-based science." arXiv preprint arXiv:2207.07048 (2022).

[4] M. Bandara, R. Jayasundara, I. Ariyarathne, D. Meedeniya, and C. Perera, "Forest sound classification dataset: FSC22," *Sensors*, vol. 23, no. 4, p. 2032, 2023.

[5] Varoquaux, Gael, and Olivier Colliot. "Evaluating machine learning models and their diagnostic value." Machine learning for brain disorders (2023): 601-630.

[6] Tampu, Iulian Emil, Anders Eklund, and Neda Haj-Hosseini. "Inflation of test accuracy due to data leakage in deep learning-based classification of OCT images." Scientific Data 9, no. 1 (2022): 580.

[7] B. van Merriënboer, J. Hamer, V. Dumoulin, E. Triantafillou, and T. Denton, "Birds, bats and beyond: Evaluating generalization in bioacoustics models," *Frontiers in Bird Science*, vol. 3, p. 1369756, 2024.

[8] J. Liang, I. Nolasco, B. Ghani, H. Phan, E. Benetos, and D. Stowell, "Mind the domain gap: A systematic analysis on bioacoustic sound event detection,"

[9] Apicella, Andrea, Francesco Isgrò, and Roberto Prevete. "Don't push the button! exploring data leakage risks in machine learning and transfer learning." arXiv preprint arXiv:2401.13796 (2024).

[10] Bouthillier, Xavier, César Laurent, and Pascal Vincent. "Unreproducible research is reproducible." In International Conference on Machine Learning, pp. 725-734. PMLR, 2019.

[11] Rosenblatt, Matthew, Link Tejavibulya, Rongtao Jiang, Stephanie Noble, and Dustin Scheinost. "Data leakage inflates prediction performance in connectome-based machine learning models." Nature Communications 15, no. 1 (2024): 1829.

[12] Ko, Tom, Vijayaditya Peddinti, Daniel Povey, and Sanjeev Khudanpur. "Audio augmentation for speech recognition." In Interspeech, vol. 2015, p. 3586. 2015.

[13] Salamon, Justin, and Juan Pablo Bello. "Deep convolutional neural networks and data augmentation for environmental sound classification." IEEE Signal processing letters 24, no. 3 (2017): 279-283.

[14] Bouke, Mohamed Aly, and Azizol Abdullah. "An empirical study of pattern leakage impact during data preprocessing on machine learning-based intrusion detection models reliability." Expert Systems with Applications 230 (2023): 120715.

[15] J. Salamon, C. Jacoby, and J. P. Bello, "UrbanSound8K: A dataset of urban sound recordings," [Online]. Available: https://urbansounddataset.weebly.com/urbansound8k.html