Series : KL5NM

SET ~ 3

प्रश्न-पत्र कोड
Q.P. Code **31/5/3**

रोल नं.
Roll No.

2	3	1	8	4	9	1	7

विज्ञान
SCIENCE

निर्धारित समय : 3 घण्टे — *अधिकतम अंक : 80*

Time allowed : 3 hours — *Maximum Marks : 80*

नोट / NOTE : {}

(I) कृपया जाँच कर लें कि इस प्रश्न-पत्र में मुद्रित पृष्ठ 31 हैं ।

Please check that this question paper contains 31 printed pages.

(II) प्रश्न-पत्र में दाहिने हाथ की ओर दिए गए प्रश्न-पत्र कोड को परीक्षार्थी उत्तर-पुस्तिका के मुख-पृष्ठ पर लिखें ।

Q.P. Code given on the right hand side of the question paper should be written on the title page of the answer-book by the candidate.

(III) कृपया जाँच कर लें कि इस प्रश्न-पत्र में 39 प्रश्न हैं ।

Please check that this question paper contains 39 questions.

(IV) **कृपया प्रश्न का उत्तर लिखना शुरू करने से पहले, उत्तर-पुस्तिका में यथा स्थान पर प्रश्न का क्रमांक अवश्य लिखें ।**

Please write down the serial number of the question in the answer-book at the given place before attempting it.

(V) इस प्रश्न-पत्र को पढ़ने के लिए 15 मिनट का समय दिया गया है । प्रश्न-पत्र का वितरण पूर्वाह्न में 10.15 बजे किया जाएगा । 10.15 बजे से 10.30 बजे तक परीक्षार्थी केवल प्रश्न-पत्र को पढ़ेंगे और इस अवधि के दौरान वे उत्तर-पुस्तिका पर कोई उत्तर नहीं लिखेंगे ।

15 minute time has been allotted to read this question paper. The question paper will be distributed at 10.15 a.m. From 10.15 a.m. to 10.30 a.m., the candidates will read the question paper only and will not write any answer on the answer-book during this period.

General Instructions :

Read the following instructions carefully and follow them :

(i) *This question paper contains **39** questions. **All** questions are compulsory.*

(ii) *Question paper is divided into **THREE** sections – **A, B** and **C.***

SECTION A : Biology (30 marks)

SECTION B : Chemistry (25 marks)

SECTION C : Physics (25 marks)

(iii) *The question paper has MCQs, VSAs, SAs, LAs and CBQs. Marks are given against each question.*

(iv) *There are Cases Based Questions (CBQs) with three sub-questions and are of **4** marks each.*

(v) *Divide your answer sheet into three sections as per question paper – SECTION A (Biology), SECTION B (Chemistry) and SECTION C (Physics). It is compulsory to answer each question in its respective section.*

Do not mix answers of one section into the other section.

(vi) *Instructions are given with each section and question, wherever necessary.*

(vii) *Kindly note that a separate question paper has been provided for visually impaired candidates.*

(viii) *There is no overall choice in the question paper. However, an internal choice has been provided in few questions. Only one of the choices in such questions must be attempted.*

SECTION – A

Biology

1. Choose the equation of reaction that correctly represents anaerobic respiration in muscles : 1

(A) Glucose $\rightarrow$ Pyruvate $\xrightarrow[\text{of } O_2]{\text{Absence}}$ Ethanol + CO_2 + Energy

(B) Glucose $\xrightarrow{O_2}$ Pyruvate $\xrightarrow{O_2}$ Energy

(C) Glucose $\xrightarrow{O_2}$ Pyruvate $\xrightarrow[\text{oxygen}]{\text{Lack of}}$ Ethanol + Energy

(D) Glucose $\rightarrow$ Pyruvate $\xrightarrow[\text{oxygen}]{\text{Lack of}}$ Lactic acid + Energy

2. Which of the following is a non-biodegradable pollutant ? 1

(A) Paper (B) DDT

(C) Wood (D) Vegetable peel

3. An ecosystem contains maximum number of : 1

(A) Producers (B) Herbivores

(C) Carnivores (D) Omnivores

4. Identify the part that controls the closing and opening of the stomatal pore in leaves of plants. 1

Select the correct option.

(A) Stomata (B) Epidermal cells

(C) Guard cells (D) Chloroplasts

5. Select the incorrect statement from the following : 1

(A) Ozone is a molecule formed by three atoms of oxygen.

(B) Ozone shields earth's surface from harmful infrared radiations.

(C) CFC's are linked to decline of O_3 layer in our atmosphere.

(D) Ozone at higher levels is a product of UV radiations acting on oxygen molecule.

6. In human beings, the implantation of fertilised egg takes place in which part of female reproductive system ? 1

(A) Oviduct (B) Cervix

(C) Uterus (D) Vagina

7. When a human egg is fertilized by a sperm having 'Y' chromosome, the zygote has the following combination of chromosomes : 1

(A) 44 + XX (B) 22 + XX

(C) 44 + XY (D) 22 + XY

Question No. **8 & 9** consists of **two** statements – Assertion (A) and Reason (R). Answer these questions selecting the appropriate option from (A), (B), (C) and (D) given below :

(A) Both Assertion (A) and Reason (R) are true and Reason (R) is the correct explanation of the Assertion (A).

(B) Both Assertion (A) and Reason (R) are true, but Reason (R) is not the correct explanation of the Assertion (A).

(C) Assertion (A) is true, but Reason (R) is false.

(D) Assertion (A) is false, but Reason (R) is true.

8. **Assertion (A)** : Bacteria that can withstand heat have better chances of survival in a heat wave. 1

Reason (R) : Accumulation of variations in a species increases the chances of its survival in changing environment.

9. **Assertion (A)** : In case of iodine deficiency in our diet, there is a possibility that we might suffer from goitre. 1

Reason (R) : One of the symptoms of goitre is swelling of neck.

10. Briefly mention the steps in double-circulation through human heart. 2

11. Why the lungs always contain a residual volume of air ? 2

12. (A) Observe the given figure and identify the labelled parts P, Q, R and S : 2

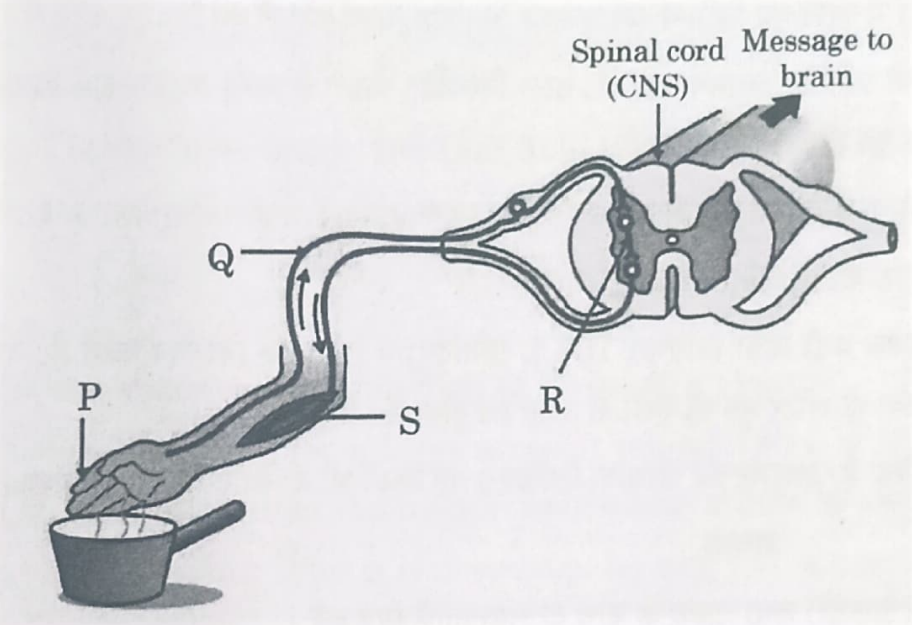

OR

(B) Which of the plant hormones are responsible for the following processes ?

(i) Promote cell division

(ii) Inhibition of growth

(iii) Detection of light

(iv) Wilting of leaves

13. (a) Mention any one harmful effect of using plastic bags on the environment. Suggest better alternatives to the usage of plastic bags. 3

(b) Paddy fields require a large amount of water. The pesticides and chemical fertilizers used are washed down into the soil or waterbodies. How do these chemicals reach our bodies ? What is this phenomenon known as ?

14. (a) Show a cross between a pea plant having round & green seed with a pea plant having wrinkled and yellow seeds upto F_2 generation. 3

(b) Also write down results of F_2 generation.

15. Kidneys help to regulate the volume of fluid and various metabolites waste products in the body. 4

Normally, kidney filter about 180 L of fluid daily but the volume actually excreted out is only a litre or two a day.

Patients with kidney failures can be saved by dialysis and kidney transplant.

(a) Write the structure and function of Bowman's capsule. 1

(b) Although kidneys filter a large amount (about 180 L daily) of fluids, still the excretion from the body is only about a litre or two. Why ? 1

(c) What is excretion ? Why is it necessary for any living organism ? 2

OR

(c) State two similarities between lungs and kidneys. 2

. (A) (i) Sugarcane does not produce seeds so name the process through which it will be able to reproduce. - Budding

(ii) List any two advantages of this method.

(iii) Besides sugarcane, give two more examples of plants that reproduce by this method.

(iv) Why regeneration is not possible in all the types of animals ? 5

OR

(B) (i) In an angiospermic flower, fertilization is said to take place when male gametes carried in the pollen tube fuse with the female gamete, present in the embryo sac. This results in lot of changes in different parts of the flower. State the changes taking place in the following structures of flower post fertilization :

(a) Zygote

(b) Ovule

(c) Ovary

(d) Sepals

(ii) Define germination.

SECTION – B

Chemistry

7. Which of the following is an amphoteric oxide ? 1

(A) Na_2O

(B) K_2O

(C) CO_2

(D) Al_2O_3

8. Which of the following will <u>not</u> undergo addition reaction ? 1

(A) C_4H_8

(B) C_2H_2

(C) C_3H_8

(D) C_2H_4

19. Magnesium ribbon burns with a dazzling white flame and changes into a white powder as shown in the diagram given below : 1

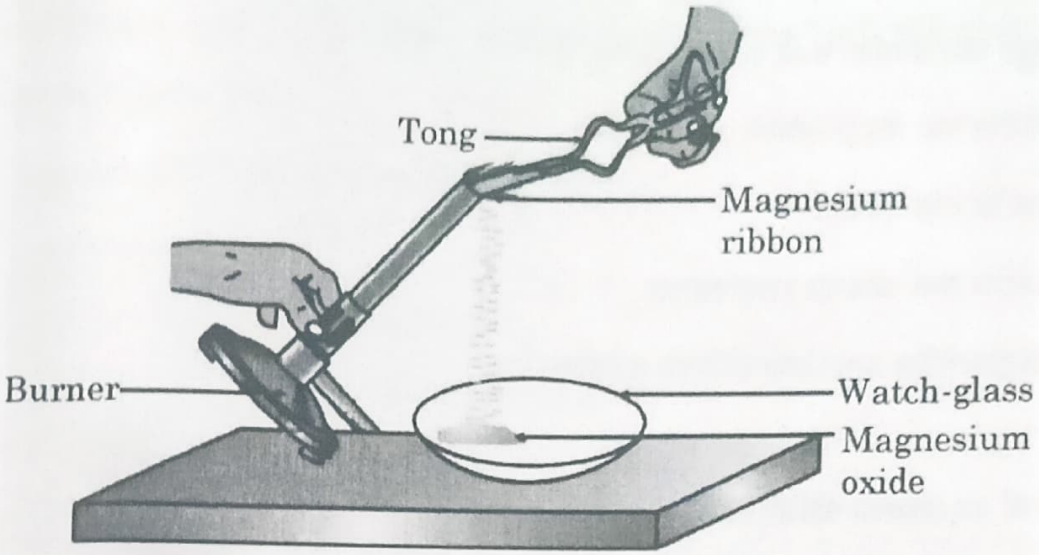

The powder is dissolved in water.

Identify the chemical formula of the white powder and the correct change observed when the solution is tested with litmus paper.

(A) MgO, turns blue litmus into red.

(B) MgO, turns red litmus blue.

(C) MgO_2, turns red litmus blue.

(D) Mg_2O, turns blue litmus red.

20. Which of the following set of compounds does not belong to same homologous series ? 1

(A) CH_4 and C_4H_{10}

(B) C_2H_6 and C_3H_8

(C) C_3H_8 and C_5H_{12}

(D) C_4H_8 and C_5H_{12}

Four solutions, namely fructose, ethanol, hydrochloric acid and sodium hydroxide filled in four separate beakers are connected one by one in an electric circuit with a bulb. The solutions in which the bulb will glow when current is passed are : 1

(A) ethanol and hydrochloric acid

(B) fructose and ethanol

(C) fructose and sodium hydroxide

(D) hydrochloric acid and sodium hydroxide

Study the following table and select the correct option : 1

	Salt	Acid used	Base used	Nature of Salt
(A)	$NaCl$	HCl	NaOH	Basic
(B)	Na_2CO_3	H_2CO_3	NaOH	Neutral
(C)	Na_2SO_4	H_2SO_4	NaOH	Acidic
(D)	CH_3COONa	CH_3COOH	NaOH	Basic

Galvanization is a process of coating iron articles with a thin layer of zinc to prevent iron from rusting. The iron is protected even if the zinc coating is scratched and iron is exposed. Which of the following is/are true about how zinc prevents the rusting of iron ? 1

(P) A galvanised iron article does not undergo oxidation.

(Q) The zinc coating prevents contact of iron with air.

(R) Zinc provides continuous protection to iron from rusting.

(A) Only (P)

(B) Only (Q)

(C) (Q) and (R)

(D) (P) and (Q)

n the question **two** statements are given – one labelled as Assertion (A) nd other labelled as Reason (R). Answer this question selecting the ppropriate option from (A), (B), (C) and (D) given below : 1

Assertion (A) : Reaction of quick lime with water is an exothermic reaction.

Reason (R) : A large amount of heat is evolved on the reaction of quick lime and water.

(A) Both Assertion (A) and Reason (R) are true and Reason (R) is the correct explanation of the Assertion (A).

(B) Both Assertion (A) and Reason (R) are true, but Reason (R) is not the correct explanation of the Assertion (A).

(C) Assertion (A) is true, but Reason (R) is false.

(D) Assertion (A) is false, but Reason (R) is true.

Write the preparation of Baking soda. How does it help in making cakes soft and spongy ? 2

What happens when

(i) potassium iodide solution is added to lead (II) nitrate solution ?

(ii) zinc is added to copper (II) chloride solution ?

(iii) hydrogen gas is passed over hot copper (II) oxide ?

Write balanced chemical equations of the reactions involved in support of your answer. 3×1

(A) (a) Give the chemical name and formula of Plaster of Paris. 3

(b) Write the chemical equation of its preparation.

(c) Give any two uses of it.

OR

(B) (a) Name the acid present in ant's sting.

(b) Give reason :

(i) While diluting an acid, it is recommended that the acid should be added to water.

(ii) Baking soda is used as an antacid.

Alcohol forms a homologous series with general formula C_nH_{2n+1} –OH and –OH group as functional group. Ethanol is commonly called alcohol and is used in alcoholic drinks. It is good solvent, used in medicines, cough syrups, tonics etc. 1+1+2

(a) Write structural formula and name of 4th member of alcohol homologous series.

(b) What happens when ethanol is heated with alkaline $KMnO_4$? Write chemical equation involved.

(c) Write the chemical equation of reaction of ethanol with ethanoic acid in the presence of concentrated H_2SO_4. Write the name of this reaction.

OR

(c) What happens when ethanol is heated with excess concentrated sulphuric acid at 443 K ? Write chemical equation involved. What is the role of concentrated sulphuric acid in this reaction ?

Attempt **either** option **(A)** or **(B)** :

(A) (i) Give reasons for the following :

(I) Ionic compound have generally high melting points and boiling points.

(II) Solder, an alloy of lead and tin, is used for welding electrical wires.

(III) Carbon cannot reduce the oxides of Na or Mg.

(ii) The reaction of compound 'X' with aluminium is used to join railway tracks :

(I) Identify the compound 'X'.

(II) Name the reaction.

(III) Write the balanced chemical equation of the reaction of compound 'X' with aluminium. **3+2**

OR

(B) (i) Write the balanced chemical equations when :

(I) A mixture of Cu_2O and Cu_2S is heated.

(II) ZnS is heated in the presence of oxygen.

(ii) Give reasons for the following :

(I) The wires carrying current in homes have a coating of PVC.

(II) To make hot water tanks, copper is used and not steel.

(iii) Show the formation of ionic compound CaO with electron dot structure.

[Atomic number : Ca = 20, O = 8] **2+2+1**

SECTION – C

Physics

Rays from the sun converge at a point 25 cm behind a convex lens. The distance at which an object be placed in front of the lens to get a virtual image, is : **1**

(A) 20 cm

(B) 40 cm

(C) 50 cm

(D) More than 50 cm

31. To restore clear vision in persons whose size of the eye ball has reduced, he/she is suggested to use suitable 1

(A) Converging lens (B) Diverging lens

(C) Bifocal lens (D) Cylindrical lens

For question number **32**, **two** statements are given – one labelled as Assertion (A) and the other labelled as Reason (R). Select the correct answer to this question from the codes (A), (B), (C) and (D) as given below :

(A) Both Assertion (A) and Reason (R) are true and Reason (R) is the correct explanation of the Assertion (A).

(B) Both Assertion (A) and Reason (R) are true, but Reason (R) is not the correct explanation of the Assertion (A).

(C) Assertion (A) is true, but Reason (R) is false.

(D) Assertion (A) is false, but Reason (R) is true.

32. **Assertion (A)** : The needle of a magnetic compass kept in strong external magnetic field, always aligns itself in north-south direction on the earth. 1

Reason (R) : Behaviour of the needle of a compass is same as that of a freely suspended bar magnet.

33. When an incident ray of light enters in a medium 'X' from medium 'Y', it bends away from the normal. 2

Comment about the following :

(a) Speed of light in medium 'X' with respect to the speed of light in medium of 'Y'.

(b) Optical density of medium 'X' with respect to the optical density of medium 'Y'.

Give reason for your answer in each case.

34. (A) (i) How does the change in curvature of the eye lens helps us in the process of seeing the nearby objects clearly ?

(ii) State the range of the power of accommodation of a normal human eye. 2

OR

(B) Draw a ray diagram to show the correction of eye defect of an old man who can not see an object placed closer than 1 m from his eye, clearly.

35. (a) Draw the ray diagram for refraction of light through a glass prism and mark angle of refraction and angle of deviation.

(b) When the path of a light ray refracted through a glass prism is reversed how will the angle of deviation change ? Explain. 3

36. An object of height 6 cm is placed at a distance of 30 cm from the optical centre of a concave lens of focal length 15 cm. 3

Use lens formula to determine :

(a) The distance of image from the optical centre.

(b) The height of the image formed.

37. (a) Why does an electric bulb become dim when an electric heater in parallel circuit is switched ON ? 3

(b) How to connect three resistors each of resistance 8 Ω, so that the equivalent resistance of the combination is 12 Ω ? Draw diagram of the combination and justify your answer.

38. Three students Shweta, Ayesha and Samridhi were performing an experiment to understand the factors on which the resistance of a conductor depends. Each one of them completed electric circuit with the help of a cell, an ammeter, a plug key and wire. 4

Shweta put nichrome wire of length 'l' in the circuit and after plugging the key, noted current in the ammeter.

Ayesha put nichrome wire of same thickness but twice the length i.e. '$2l$' in the circuit and after plugging the key, noted current in the ammeter.

Samridhi took copper wire of length 'l' and same thickness in the circuit and after plugging the key, noted current in the ammeter.

(a) If the ammeter reading is X ampere with nichrome wire of length 'l', then what will be the ammeter reading if the length of nichrome wire is doubled with same area of cross-section ?

(b) What happens to the ammeter reading if the area of cross-section of nichrome wire is doubled, keeping the length of wire 'l' the same ?

(c) Define 'resistivity'. Write its SI unit. Compare the resistivity of an alloy with its constituents metals.

OR

(c) Give reason :

(i) Tungsten is used almost exclusively for making the filament of electric lamps.

(ii) Conductors of bread-toasters are made of an alloy rather than a pure metal.

39. (A) (i) State the rule which gives the direction of force acting on a current carrying conductor placed in a uniform magnetic field. 5

(ii) Name any two devices which work on the basis of an interaction between magnetic field and current carrying conductor.

(iii) Observe the given diagrams :

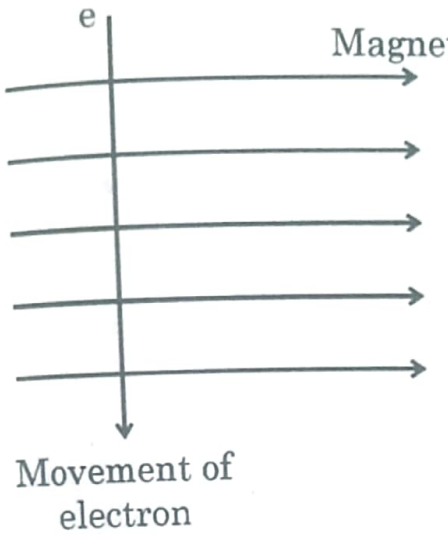

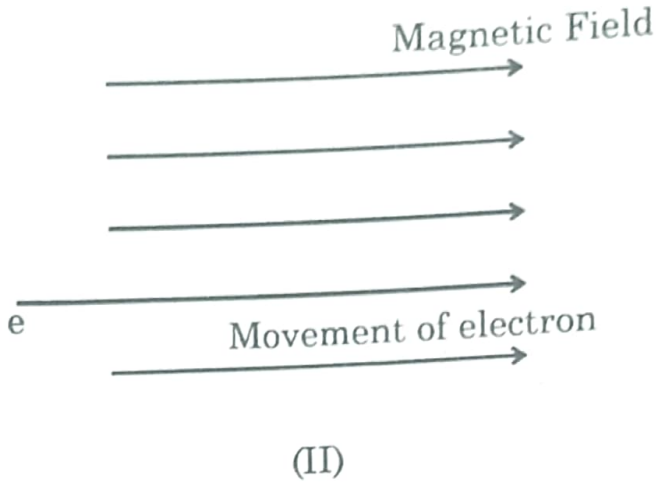

Comment on the magnitude of force on electron in both the cases and give reason for your answer.

OR

(B) (i) List three possible reasons of short-circuiting in an electric circuit.

(ii)

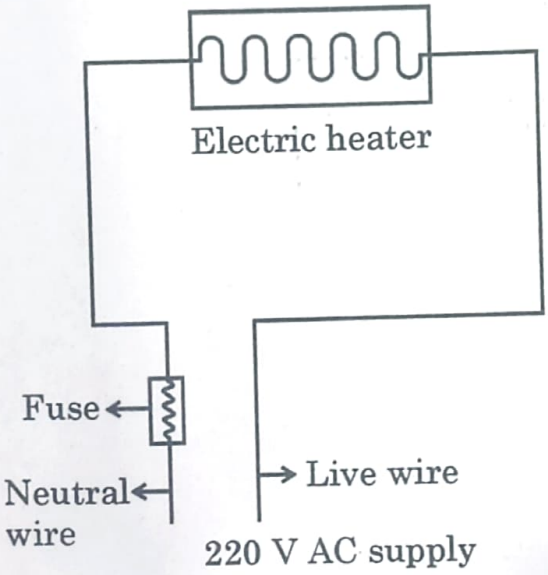

In case of overload, will the fuse protect to given electric circuit from damage ? Justify your answer.

(iii) For an electric heater rated as 220 V, 2200 W, what should be the minimum rating of fuse used with it ?