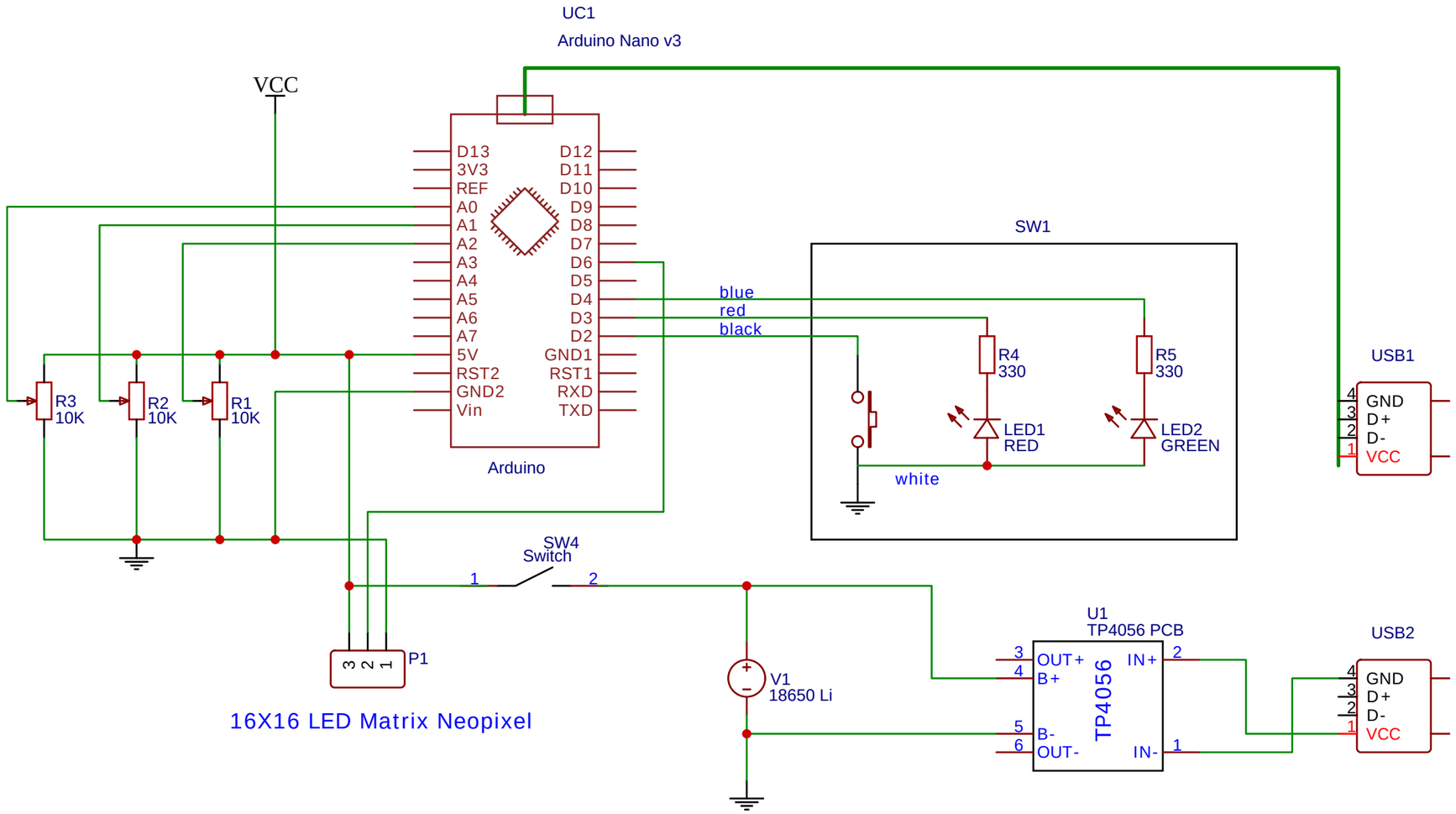

TITLE: BUK	REV: 1.0
Date: 2018-11-01	Sheet: 1/1
EasyEDA V5.8.20	Drawn By: asavelyev1955