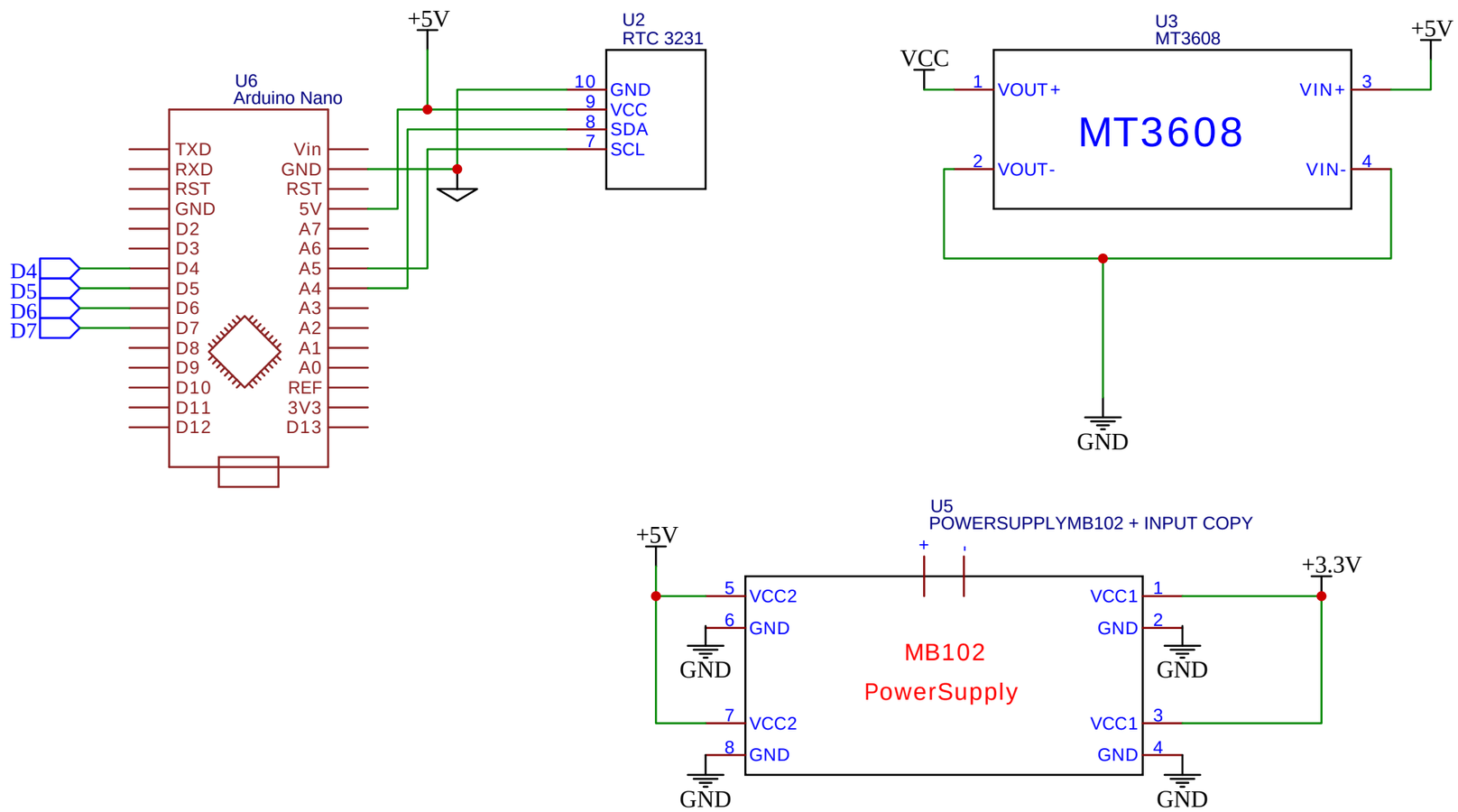

TITLE: VFD Clock IV-27/1		REV: 1.0
EasyEDA	Company: Your Company	Sheet: 1/1
	Date: 2020-02-17 Drawn By: asavelyev1955	

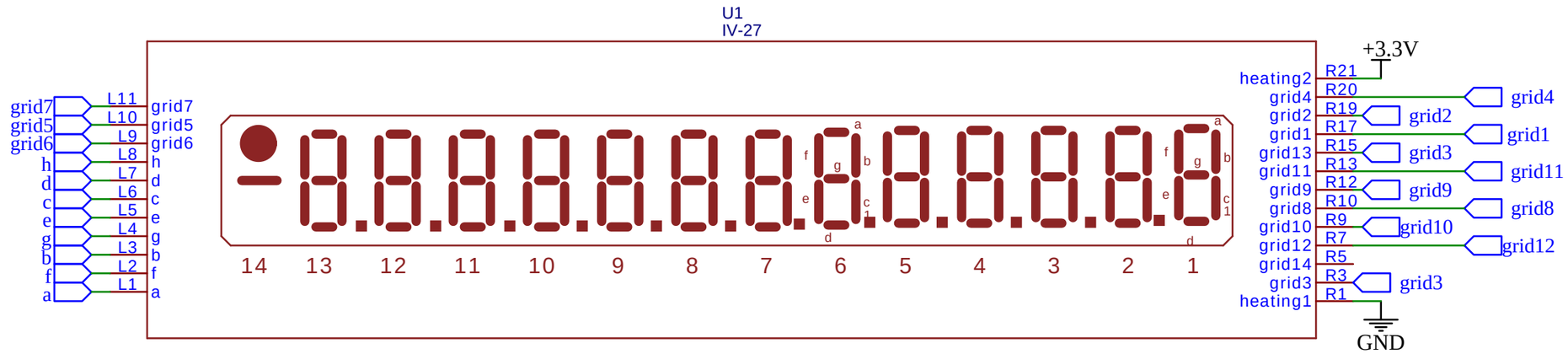

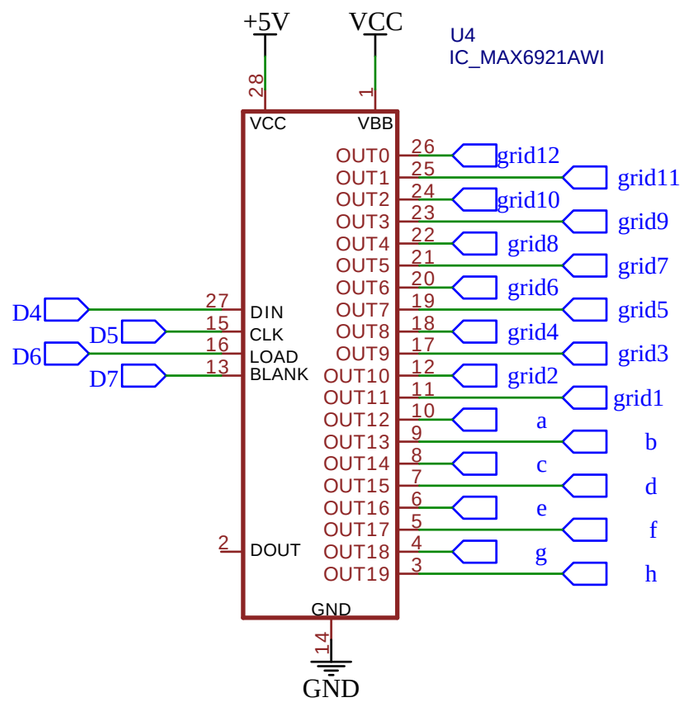

TITLE: VFD Clock IV-27/2		REV: 1.0
EasyEDA	Company: Your Company	Sheet: 1/1
	Date: 2020-02-17 Drawn By: asavelyev1955	