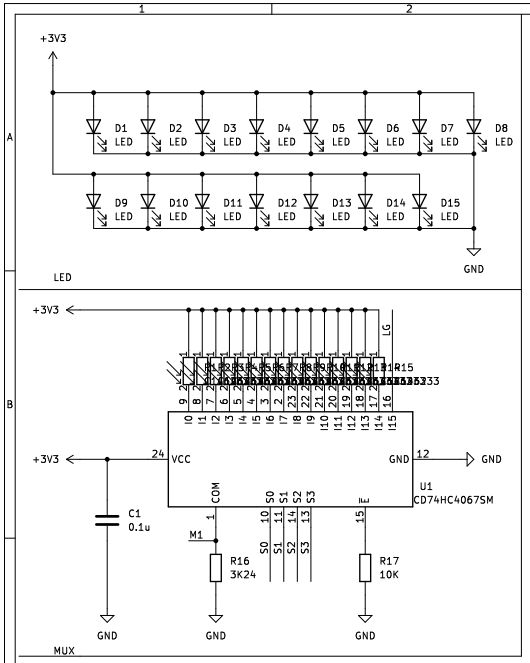

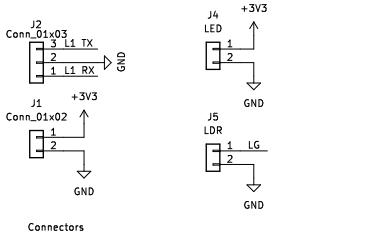

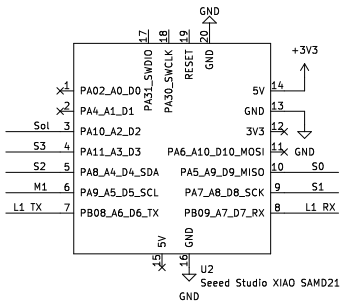

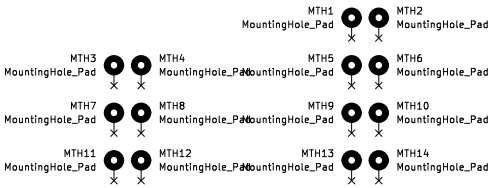

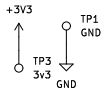

MTH and Testpoints

Sentinels Robotics

Sheet: /

File: 202411.kicad_sch

Title: Layer 1

Size: A3	Date: 2023-04-21	**Rev: 1**
KiCad E.D.A. kicad 7.0.7		Id: 1/1