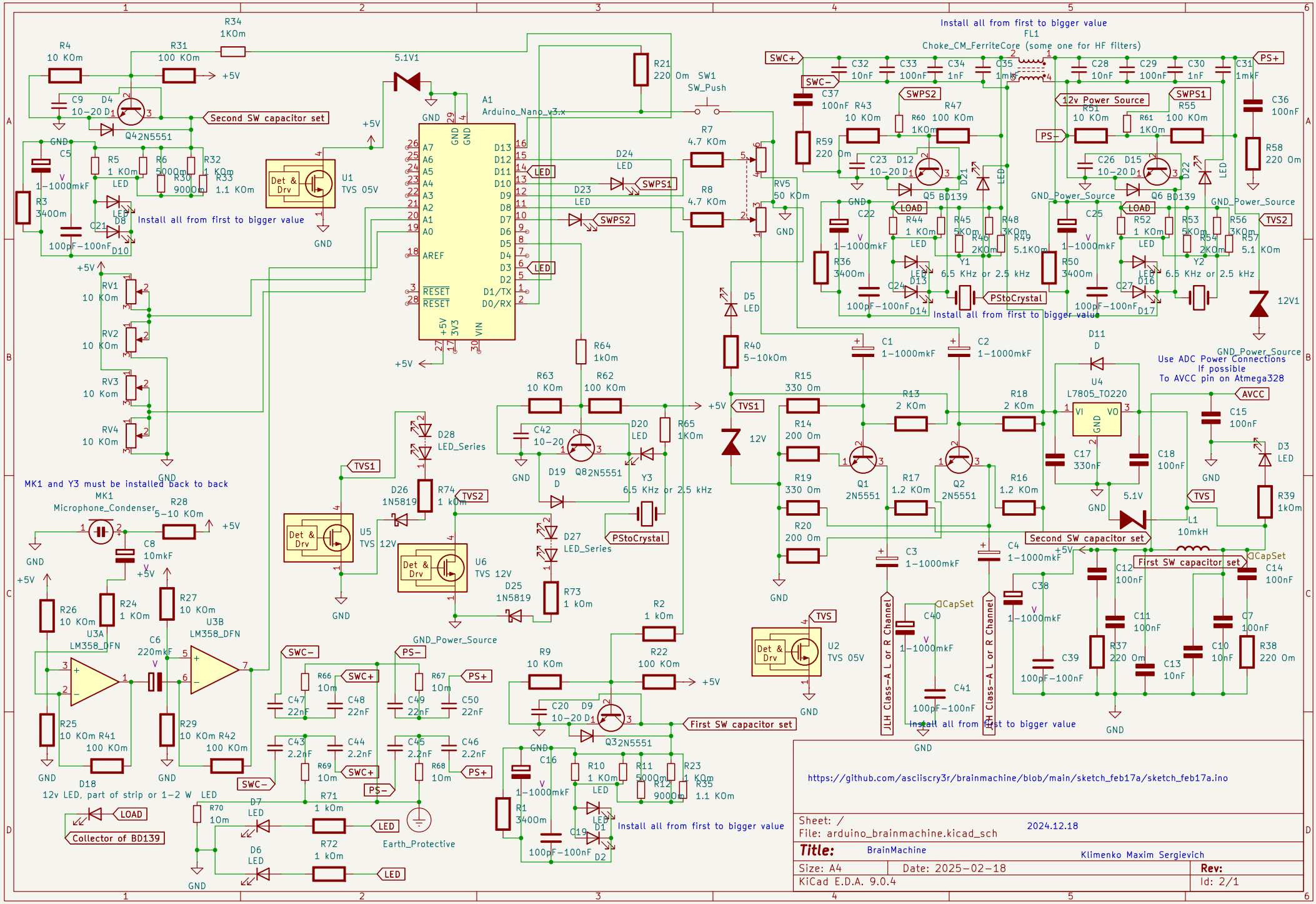
Install all from first to bigger value
FL1
Choke_CM_FerriteCore (some one for HF filters)
A1
Arduino_Nano_v3.x
SW1
SW_Push
Second SW capacitor set
First SW capacitor set
12v Power Source
GND_Power_Source
Use ADC Power Connections
If possible
To AVCC pin on Atmega328
MK1 and Y3 must be installed back to back
MK1
Microphone_Condenser
12v LED, part of strip or 1-2 W
Collector of BD139
Earth_Protective
JLH Class-A L or R Channel
https://github.com/asciiscry3r/brainmachine/blob/main/sketch_feb17a/sketch_feb17a.ino
Sheet: /
File: arduino_brainmachine.kicad_sch
2024.12.18
Title: BrainMachine
Klimenko Maxim Sergievich
Size: A4
Date: 2025-02-18
Rev:
KiCad E.D.A. 9.0.4
Id: 2/1