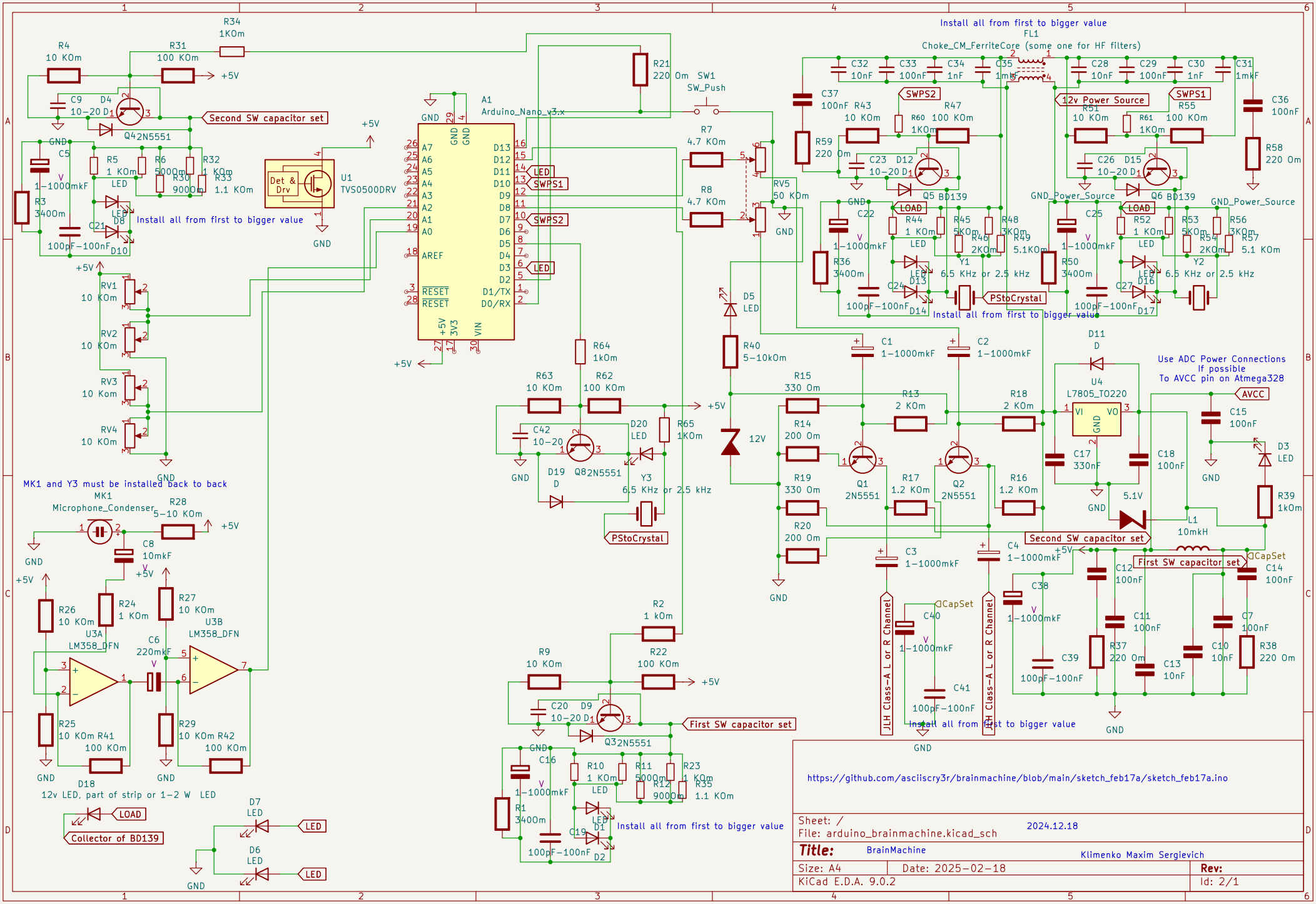
Install all from first to bigger value
FL1
Choke_CM_FerriteCore (some one for HF filters)
R34 1KOm
R4 10 KOm
R31 100 KOm
+5V
C9 10-20
D4
D1
Q4 2N5551
Second SW capacitor set
GND
C5 1-1000mkF
R3 3400m
R5 1 KOm
R6 5000m
R32 1 KOm
R30 9000m
R33 1.1 KOm
LED
D8
C21 100pF-100nF
D10
Install all from first to bigger value
Det & Drv
U1 TVS0500DRV
A1 Arduino_Nano_v3.x
A7 A6 A5 A4 A3 A2 A1 A0 AREF RESET RESET
D13 D12 D11 D10 D9 D8 D7 D6 D5 D4 D3 D2 D1/TX D0/RX
GND GND GND
+5V 3V3 VIN
LED SWPS1 SWPS2 LED
R21 220 Om
SW1 SW_Push
R7 4.7 KOm
R8 4.7 KOm
RV5 50 KOm
RV1 10 KOm
RV2 10 KOm
RV3 10 Kom
RV4 10 KOm
R64 1kOm
R63 10 KOm
R62 100 KOm
C42 10-20
D20 LED
R65 1KOm
D19 D
Q8 2N5551
Y3 6.5 KHz or 2.5 kHz
PStoCrystal
MK1 and Y3 must be installed back to back
MK1 Microphone_Condenser
R28 5-10 KOm
C8 10mkF
R26 10 KOm
R24 1 KOm
R27 10 KOm
U3A LM358_DFN
U3B LM358_DFN
C6 220mkF
R25 10 KOm
R41 100 KOm
R29 10 KOm
R42 100 KOm
D18
12v LED, part of strip or 1-2 W LED
LOAD
Collector of BD139
D7 LED
D6 LED
R2 1 kOm
R9 10 KOm
R22 100 KOm
C20 10-20
D9
Q3 2N5551
First SW capacitor set
C16 1-1000mkF
R1 3400m
R10 1 KOm
R11 5000m
R23 1 KOm
R12 9000m
R35 1.1 KOm
D1
D2
C19 100pF-100nF
Install all from first to bigger value
D5 LED
R40 5-10kOm
12V
R15 330 Om
R14 200 Om
R19 330 Om
R20 200 Om
R13 2 KOm
R17 1.2 KOm
Q1 2N5551
Q2 2N5551
R18 2 KOm
R16 1.2 KOm
C1 1-1000mkF
C2 1-1000mkF
C3 1-1000mkF
C4 1-1000mkF
JLH Class-A L or R Channel
RH Class-A L or R Channel
CapSet
C40 1-1000mkF
C41 100pF-100nF
Install all from first to bigger value
C32 10nF
C33 100nF
C34 1nF
C35 1mkF
C28 10nF
C29 100nF
C30 1nF
C31 1mkF
C37 100nF
R43 10 KOm
R59 220 Om
SWPS2
R60 1KOm
R47 100 KOm
C23 10-20
D12
Q5 BD139
12v Power Source
SWPS1
R51 10 KOm
R61 1KOm
R55 100 KOm
C36 100nF
R58 220 Om
C26 10-20
D15
Q6 BD139
GND_Power_Source
C22 1-1000mkF
LOAD
R44 1 KOm
R45 5KOm
R46 2KOm
R48 3KOm
R49 5.1KOm
R36 3400m
Y1 6.5 KHz or 2.5 kHz
PStoCrystal
C24 100pF-100nF
D13
D14
Install all from first to bigger value
C25 1-1000mkF
R52 1 KOm
R53 5KOm
R54 2KOm
R56 3KOm
R57 5.1 KOm
R50 3400m
Y2 6.5 KHz or 2.5 kHz
C27 100pF-100nF
D16
D17
D11 D
U4 L7805_TO220
VI VO GND
C17 330nF
C18 100nF
5.1V
Use ADC Power Connections
If possible
To AVCC pin on Atmega328
AVCC
C15 100nF
D3 LED
R39 1kOm
L1 10mkH
Second SW capacitor set
First SW capacitor set
CapSet
C12 100nF
C14 100nF
C38 1-1000mkF
C39 100pF-100nF
C11 100nF
R37 220 Om
C13 10nF
C10 10nF
C7 100nF
R38 220 Om
https://github.com/asciiscry3r/brainmachine/blob/main/sketch_feb17a/sketch_feb17a.ino
Sheet: /
File: arduino_brainmachine.kicad_sch
2024.12.18
Title: BrainMachine
Klimenko Maxim Sergievich
Size: A4
Date: 2025-02-18
Rev:
KiCad E.D.A. 9.0.2
Id: 2/1