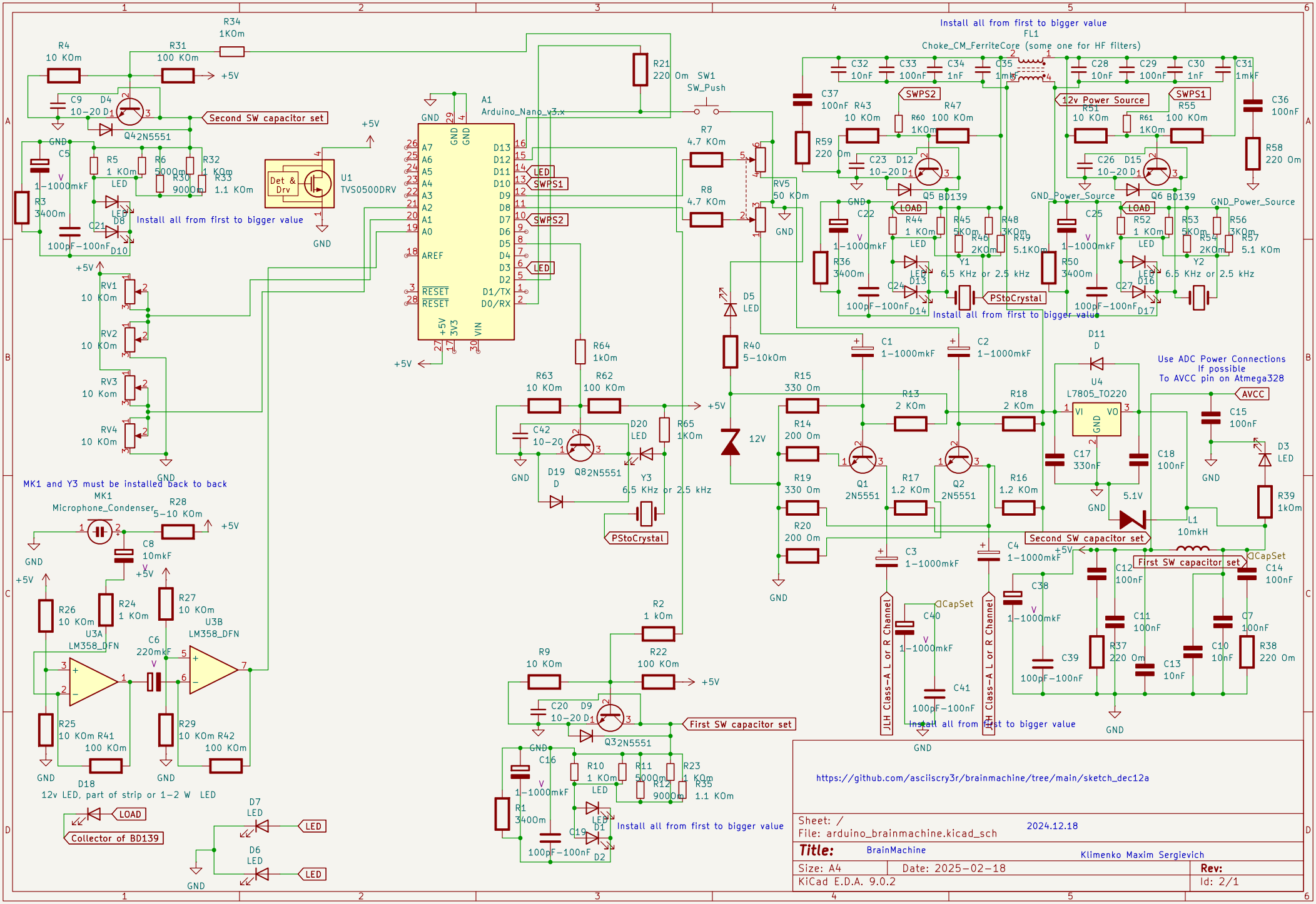
Install all from first to bigger value
FL1
Choke_CM_FerriteCore (some one for HF filters)
A1
Arduino_Nano_v3.x
SW1
SW_Push
Second SW capacitor set
12v Power Source
SWPS1
SWPS2
LOAD
PStoCrystal
GND_Power_Source
Use ADC Power Connections
If possible
To AVCC pin on Atmega328
AVCC
U4
L7805_TO220
U1
TVS0500DRV
Det &
Drv
MK1 and Y3 must be installed back to back
MK1
Microphone_Condenser
U3A
LM358_DFN
U3B
LM358_DFN
12v LED, part of strip or 1-2 W LED
Collector of BD139
JLH Class-A L or R Channel
RH Class-A L or R Channel
First SW capacitor set
CapSet
https://github.com/asciiscry3r/brainmachine/tree/main/sketch_dec12a
Sheet: /
File: arduino_brainmachine.kicad_sch
2024.12.18
Title: BrainMachine
Klimenko Maxim Sergievich
Size: A4
Date: 2025-02-18
Rev:
KiCad E.D.A. 9.0.2
Id: 2/1