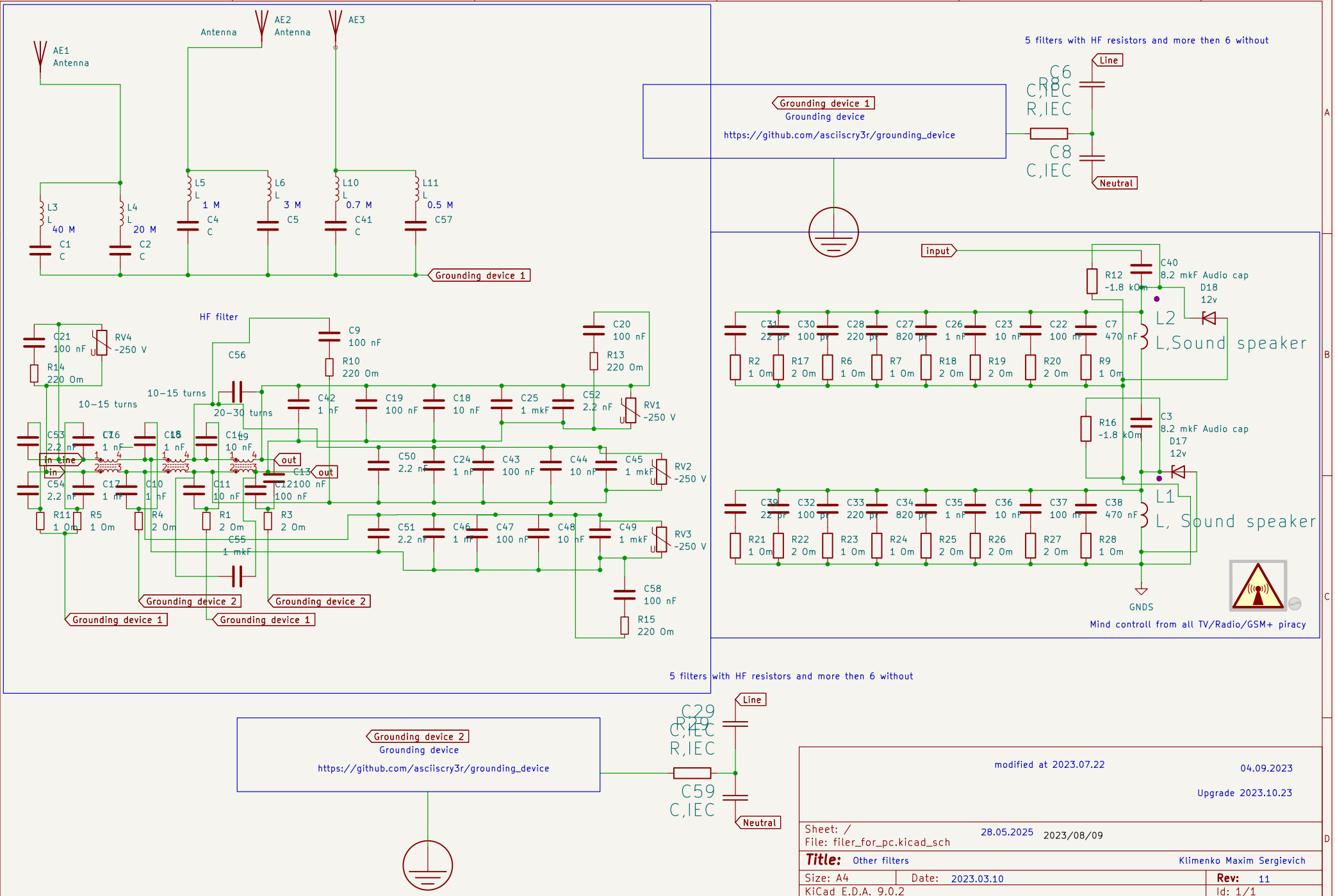

modified at 2023.07.22

04.09.2023

Upgrade 2023.10.23

Sheet: /
File: filer_for_pc.kicad_sch

28.05.2025 2023/08/09

Title: Other filters

Klimenko Maxim Sergievich

Size: A4 | Date: 2023.03.10 | **Rev:** 11

KiCad E.D.A. 9.0.2 | Id: 1/1