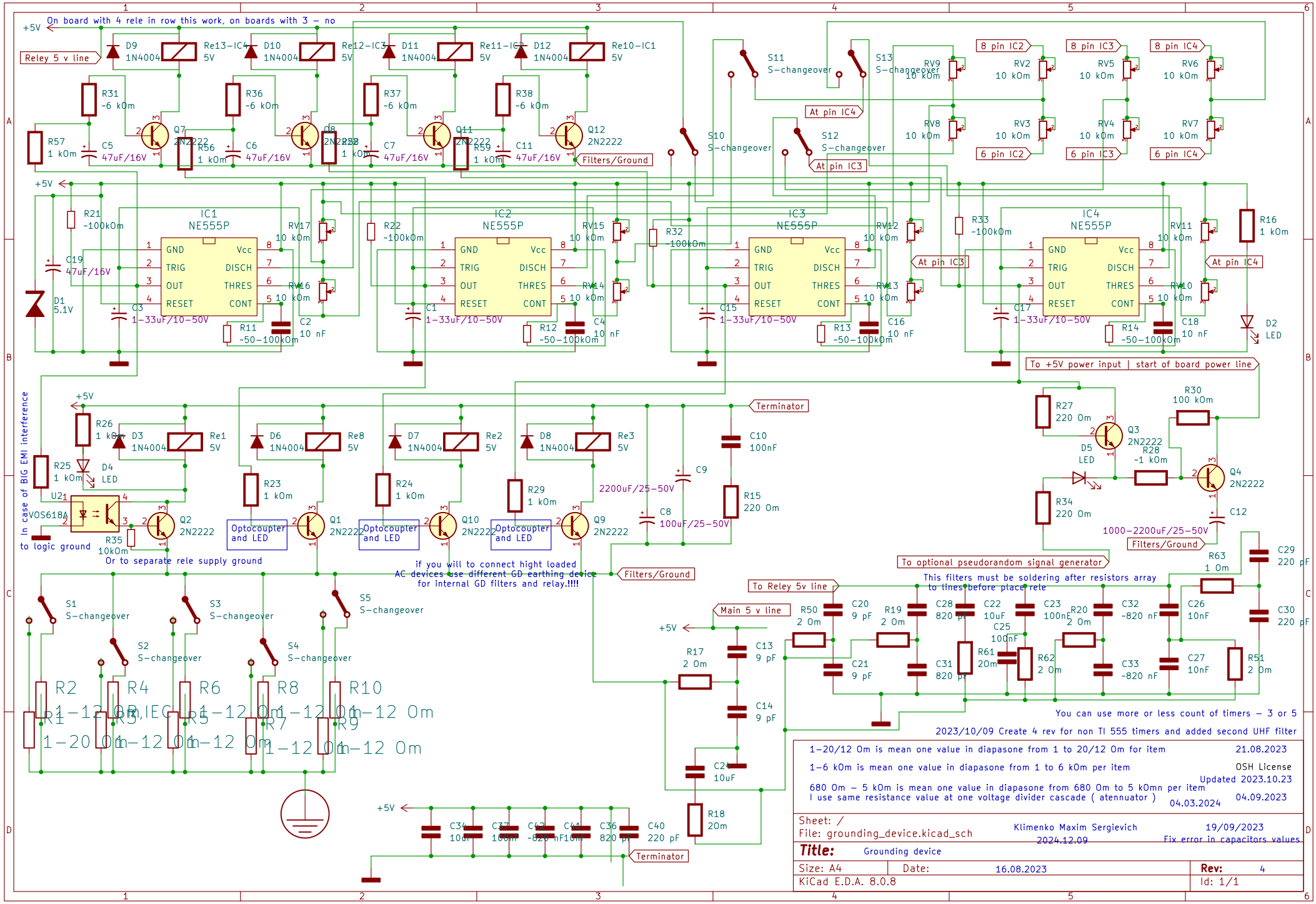
On board with 4 rele in row this work, on boards with 3 – no
+5V
Reley 5 v line
D9 1N4004
Re13-IC4 5V
D10 1N4004
Re12-IC3 5V
D11 1N4004
Re11-IC2 5V
D12 1N4004
Re10-IC1 5V
R31 ~6 kOm
R36 ~6 kOm
R37 ~6 kOm
R38 ~6 kOm
R57 1 kOm
C5 47uF/16V
Q7 2N2222
R56 1 kOm
C6 47uF/16V
Q8 2N2222
R58 1 kOm
C7 47uF/16V
Q11 2N2222
R59 1 kOm
C11 47uF/16V
Q12 2N2222
Filters/Ground
S10 S-changeover
S11 S-changeover
S12 S-changeover
S13 S-changeover
At pin IC4
At pin IC3
8 pin IC2
8 pin IC3
8 pin IC4
6 pin IC2
6 pin IC3
6 pin IC4
RV9 10 kOm
RV2 10 kOm
RV5 10 kOm
RV6 10 kOm
RV8 10 kOm
RV3 10 kOm
RV4 10 kOm
RV7 10 kOm
R21 ~100kOm
R22 ~100kOm
R32 100kOm
R33 ~100kOm
R16 1 kOm
IC1 NE555P
IC2 NE555P
IC3 NE555P
IC4 NE555P
GND
TRIG
OUT
RESET
Vcc
DISCH
THRES
CONT
RV17 10 kOm
RV16 10 kOm
RV15 10 kOm
RV14 10 kOm
RV12 10 kOm
RV13 10 kOm
RV11 10 kOm
RV10 10 kOm
C19 47uF/16V
D1 5.1V
C3 1-33uF/10-50V
R11 ~50-100kOm
C2 10 nF
C1 1-33uF/10-50V
R12 ~50-100kOm
C4 10 nF
C15 1-33uF/10-50V
R13 ~50-100kOm
C16 10 nF
C17 1-33uF/10-50V
R14 ~50-100kOm
C18 10 nF
D2 LED
To +5V power input | start of board power line
Terminator
R26 1 kOm
D3 1N4004
Re1 5V
D6 1N4004
Re8 5V
D7 1N4004
Re2 5V
D8 1N4004
Re3 5V
C10 100nF
R25 1 kOm
D4 LED
R23 1 kOm
R24 1 kOm
R29 1 kOm
C9 2200uF/25-50V
R15 220 Om
C8 100uF/25-50V
U2 VOS618A
Q2 2N2222
Q1 2N2222
Q10 2N2222
Q9 2N2222
Optocoupler and LED
Optocoupler and LED
Optocoupler and LED
R35 10kOm
Or to separate rele supply ground
In case of BIG EMI interference
to logic ground
R27 220 Om
Q3 2N2222
D5 LED
R28 ~1 kOm
R30 100 kOm
Q4 2N2222
R34 220 Om
C12 1000-2200uF/25-50V
Filters/Ground
if you will to connect hight loaded AC devices use different GD earthing device for internal GD filters and relay.!!!!
Filters/Ground
To optional pseudorandom signal generator
This filters must be soldering after resistors array to lines before place rele
To Reley 5v line
Main 5 v line
S1 S-changeover
S2 S-changeover
S3 S-changeover
S4 S-changeover
S5 S-changeover
R2 1-12 Om
R4 1-12 Om
R6 1-12 Om
R8 1-12 Om
R10 1-12 Om
R1 1-20 Om
R3 1-12 Om
R5 1-12 Om
R7 1-12 Om
R9 1-12 Om
R17 2 Om
C13 9 pF
C14 9 pF
C24 10uF
R18 20m
R50 2 Om
C20 9 pF
C21 9 pF
R19 2 Om
C28 820 pF
C31 820 pF
C22 10uF
C25 100nF
R61 20m
C23 100nF
R62 2 Om
R20 2 Om
C32 ~820 nF
C33 ~820 nF
C26 10nF
C27 10nF
R63 1 Om
R51 2 Om
C29 220 pF
C30 220 pF
You can use more or less count of timers – 3 or 5
2023/10/09 Create 4 rev for non TI 555 timers and added second UHF filter
C34 10uF
C37 100nF
C42 ~820 nF
C41 10nF
C36 820 pF
C40 220 pF
Terminator
1-20/12 Om is mean one value in diapasone from 1 to 20/12 Om for item
1-6 kOm is mean one value in diapasone from 1 to 6 kOm per item
680 Om – 5 kOm is mean one value in diapasone from 680 Om to 5 kOmn per item
I use same resistance value at one voltage divider cascade (atennuator)
21.08.2023
OSH License
Updated 2023.10.23
04.03.2024
04.09.2023
Sheet: /
File: grounding_device.kicad_sch
Klimenko Maxim Sergievich
2024.12.09
19/09/2023
Fix error in capacitors values
Title: Grounding device
Size: A4
Date: 16.08.2023
Rev: 4
KiCad E.D.A. 8.0.8
Id: 1/1