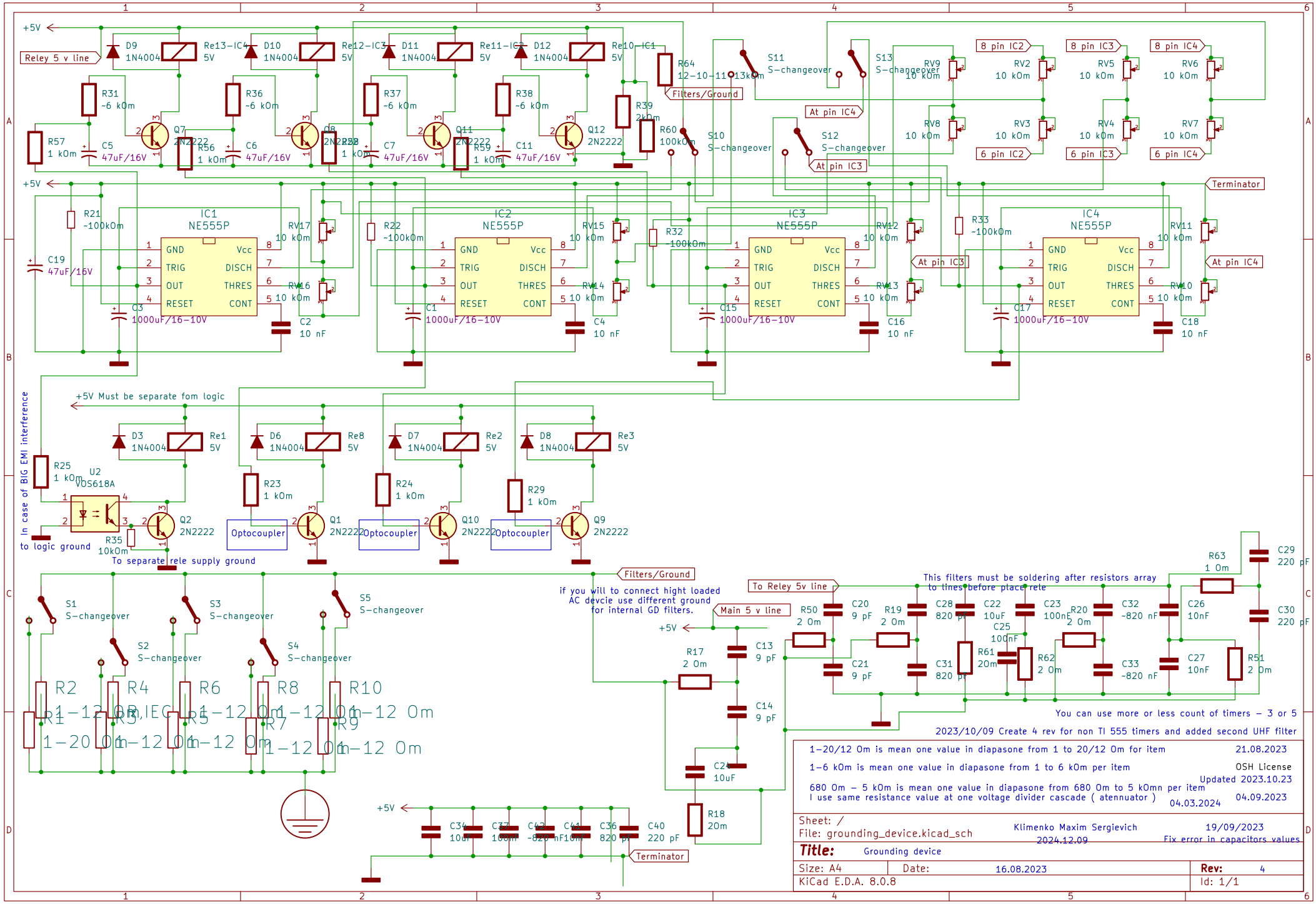
+5V
Reley 5 v line
D9 1N4004
Re13-IC4 5V
D10 1N4004
Re12-IC3 5V
D11 1N4004
Re11-IC2 5V
D12 1N4004
Re10-IC1 5V
R31 ~6 kOm
R36 ~6 kOm
R37 ~6 kOm
R38 ~6 kOm
R39 2kOm
R64 12-10-11-13kOm
Filters/Ground
S11 S-changeover
S13 S-changeover
8 pin IC2
8 pin IC3
8 pin IC4
RV9 10 kOm
RV2 10 kOm
RV5 10 kOm
RV6 10 kOm
RV8 10 kOm
RV3 10 kOm
RV4 10 kOm
RV7 10 kOm
6 pin IC2
6 pin IC3
6 pin IC4
At pin IC4
At pin IC3
R57 1 kOm
C5 47uF/16V
Q7 2N2222
R56 1 kOm
C6 47uF/16V
Q8 2N2222
R58 1 kOm
C7 47uF/16V
Q11 2N2222
R59 1 kOm
C11 47uF/16V
Q12 2N2222
R60 100kOm
S10 S-changeover
S12 S-changeover
Terminator
R21 ~100kOm
IC1 NE555P
RV17 10 kOm
RV16 10 kOm
C19 47uF/16V
C3 1000uF/16-10V
C2 10 nF
R22 ~100kOm
IC2 NE555P
RV15 10 kOm
RV14 10 kOm
C1 1000uF/16-10V
C4 10 nF
R32 100kOm
IC3 NE555P
RV12 10 kOm
RV13 10 kOm
C15 1000uF/16-10V
C16 10 nF
R33 ~100kOm
IC4 NE555P
RV11 10 kOm
RV10 10 kOm
C17 1000uF/16-10V
C18 10 nF
GND
TRIG
OUT
RESET
Vcc
DISCH
THRES
CONT
+5V Must be separate fom logic
D3 1N4004
Re1 5V
D6 1N4004
Re8 5V
D7 1N4004
Re2 5V
D8 1N4004
Re3 5V
R25 1 kOm
U2 VOS618A
R23 1 kOm
R24 1 kOm
R29 1 kOm
Q2 2N2222
Q1 2N2222
Q10 2N2222
Q9 2N2222
Optocoupler
Optocoupler
Optocoupler
R35 10kOm
In case of BIG EMI interference
to logic ground
To separate rele supply ground
S1 S-changeover
S2 S-changeover
S3 S-changeover
S4 S-changeover
S5 S-changeover
R2 1-12 Om
R4 1-12 Om
R6 1-12 Om
R8 1-12 Om
R10 1-12 Om
R1 1-20 Om
R3 1-12 Om
R5 1-12 Om
R7 1-12 Om
R9 1-12 Om
Filters/Ground
if you will to connect hight loaded AC devcie use different ground for internal GD filters.
Main 5 v line
R17 2 Om
C13 9 pF
C14 9 pF
C24 10uF
R18 20m
C34 10uF
C37 100uF
C42 ~820 nF
C41 10uF
C36 820 pF
C40 220 pF
Terminator
To Reley 5v line
This filters must be soldering after resistors array to lines before place rele
R50 2 Om
C20 9 pF
C21 9 pF
R19 2 Om
C28 820 pF
C31 820 pF
C22 10uF
C25 100nF
R61 20m
C23 100nF
R62 2 Om
R20 2 Om
C32 ~820 nF
C33 ~820 nF
R63 1 Om
C26 10nF
C27 10nF
C29 220 pF
C30 220 pF
R51 2 Om
You can use more or less count of timers - 3 or 5
2023/10/09 Create 4 rev for non TI 555 timers and added second UHF filter
1-20/12 Om is mean one value in diapasone from 1 to 20/12 Om for item
1-6 kOm is mean one value in diapasone from 1 to 6 kOm per item
680 Om - 5 kOm is mean one value in diapasone from 680 Om to 5 kOmn per item
I use same resistance value at one voltage divider cascade (atennuator)
21.08.2023
OSH License
Updated 2023.10.23
04.03.2024
04.09.2023
Sheet: /
File: grounding_device.kicad_sch
Klimenko Maxim Sergievich
2024.12.09
19/09/2023
Fix error in capacitors values
Title: Grounding device
Size: A4
Date: 16.08.2023
Rev: 4
KiCad E.D.A. 8.0.8
Id: 1/1