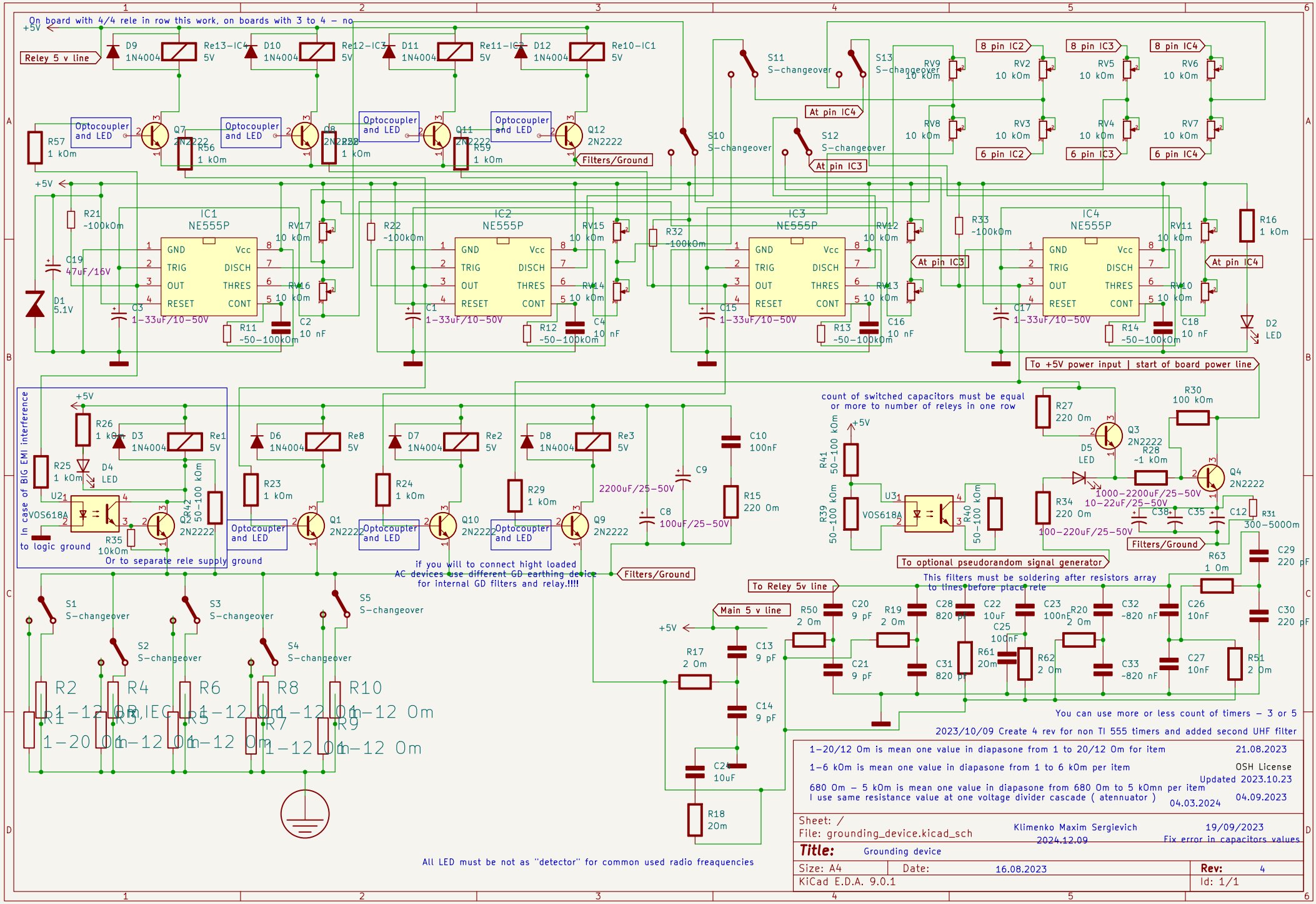
On board with 4/4 rele in row this work, on boards with 3 to 4 – no
Reley 5 v line
+5V
D9 1N4004
Re13-IC4 5V
D10 1N4004
Re12-IC3 5V
D11 1N4004
Re11-IC2 5V
D12 1N4004
Re10-IC1 5V
Optocoupler and LED
Q7 2N2222
Q8 2N2222
Q11 2N2222
Q12 2N2222
R57 1 kOm
R56 1 kOm
R59 1 kOm
Filters/Ground
S10 S-changeover
S11 S-changeover
S12 S-changeover
S13 S-changeover
At pin IC4
At pin IC3
8 pin IC2
8 pin IC3
8 pin IC4
6 pin IC2
6 pin IC3
6 pin IC4
RV2 10 kOm
RV3 10 kOm
RV4 10 kOm
RV5 10 kOm
RV6 10 kOm
RV7 10 kOm
RV8 10 kOm
RV9 10 kOm
IC1 NE555P
IC2 NE555P
IC3 NE555P
IC4 NE555P
GND TRIG OUT RESET Vcc DISCH THRES CONT
R21 ~100kOm
R22 ~100kOm
R32 100kOm
R33 ~100kOm
R16 1 kOm
C19 47uF/16V
D1 5.1V
C3 1-33uF/10-50V
C1 1-33uF/10-50V
C15 1-33uF/10-50V
C17 1-33uF/10-50V
R11 ~50-100kOm
R12 ~50-100kOm
R13 ~50-100kOm
R14 ~50-100kOm
C2 10 nF
C4 10 nF
C16 10 nF
C18 10 nF
D2 LED
To +5V power input | start of board power line
In case of BIG EMI interference
R26 1 kOm
D3 1N4004
Re1 5V
R25 1 kOm
D4 LED
U2 VOS618A
R42 50-100 kOm
Q2 2N2222
R35 10kOm
to logic ground
Or to separate rele supply ground
D6 1N4004
Re8 5V
D7 1N4004
Re2 5V
D8 1N4004
Re3 5V
R23 1 kOm
R24 1 kOm
R29 1 kOm
Q1 2N2222
Q10 2N2222
Q9 2N2222
C10 100nF
C9 2200uF/25-50V
C8 100uF/25-50V
R15 220 Om
if you will to connect hight loaded
AC devices use different GD earthing device
for internal GD filters and relay.!!!!
count of switched capacitors must be equal
or more to number of releys in one row
R41 50-100 kOm
R39 50-100 kOm
U3 VOS618A
R40 50-100 kOm
To optional pseudorandom signal generator
R27 220 Om
Q3 2N2222
D5 LED
R28 ~1 kOm
R30 100 kOm
Q4 2N2222
R34 220 Om
1000-2200uF/25-50V
10-22uF/25-50V
100-220uF/25-50V
C38
C35
C12
R31 300-5000m
Filters/Ground
R63 1 Om
C29 220 pF
C30 220 pF
This filters must be soldering after resistors array
to lines before place rele
To Reley 5v line
Main 5 v line
R50 2 Om
C20 9 pF
R19 2 Om
C28 820 pF
C22 10uF
C23 100nF
R20 2 Om
C32 ~820 nF
C26 10nF
C21 9 pF
C31 820 pF
C25 100nF
R61 20m
R62 2 Om
C33 ~820 nF
C27 10nF
R51 2 Om
R17 2 Om
C13 9 pF
C14 9 pF
C24 10uF
R18 20m
S1 S-changeover
S2 S-changeover
S3 S-changeover
S4 S-changeover
S5 S-changeover
R2 1-12 Om
R4 1-12 Om
R6 1-12 Om
R8 1-12 Om
R10 1-12 Om
R1 1-20 Om
R3 1-12 Om
R5 1-12 Om
R7 1-12 Om
R9 1-12 Om
IEC
You can use more or less count of timers – 3 or 5
2023/10/09 Create 4 rev for non TI 555 timers and added second UHF filter
1-20/12 Om is mean one value in diapasone from 1 to 20/12 Om for item
1-6 kOm is mean one value in diapasone from 1 to 6 kOm per item
680 Om – 5 kOm is mean one value in diapasone from 680 Om to 5 kOmn per item
I use same resistance value at one voltage divider cascade (atennuator)
21.08.2023
OSH License
Updated 2023.10.23
04.09.2023
04.03.2024
Sheet: /
File: grounding_device.kicad_sch
Klimenko Maxim Sergievich
2024.12.09
19/09/2023
Fix error in capacitors values
Title: Grounding device
Size: A4
Date: 16.08.2023
Rev: 4
KiCad E.D.A. 9.0.1
Id: 1/1
All LED must be not as "detector" for common used radio freaquencies