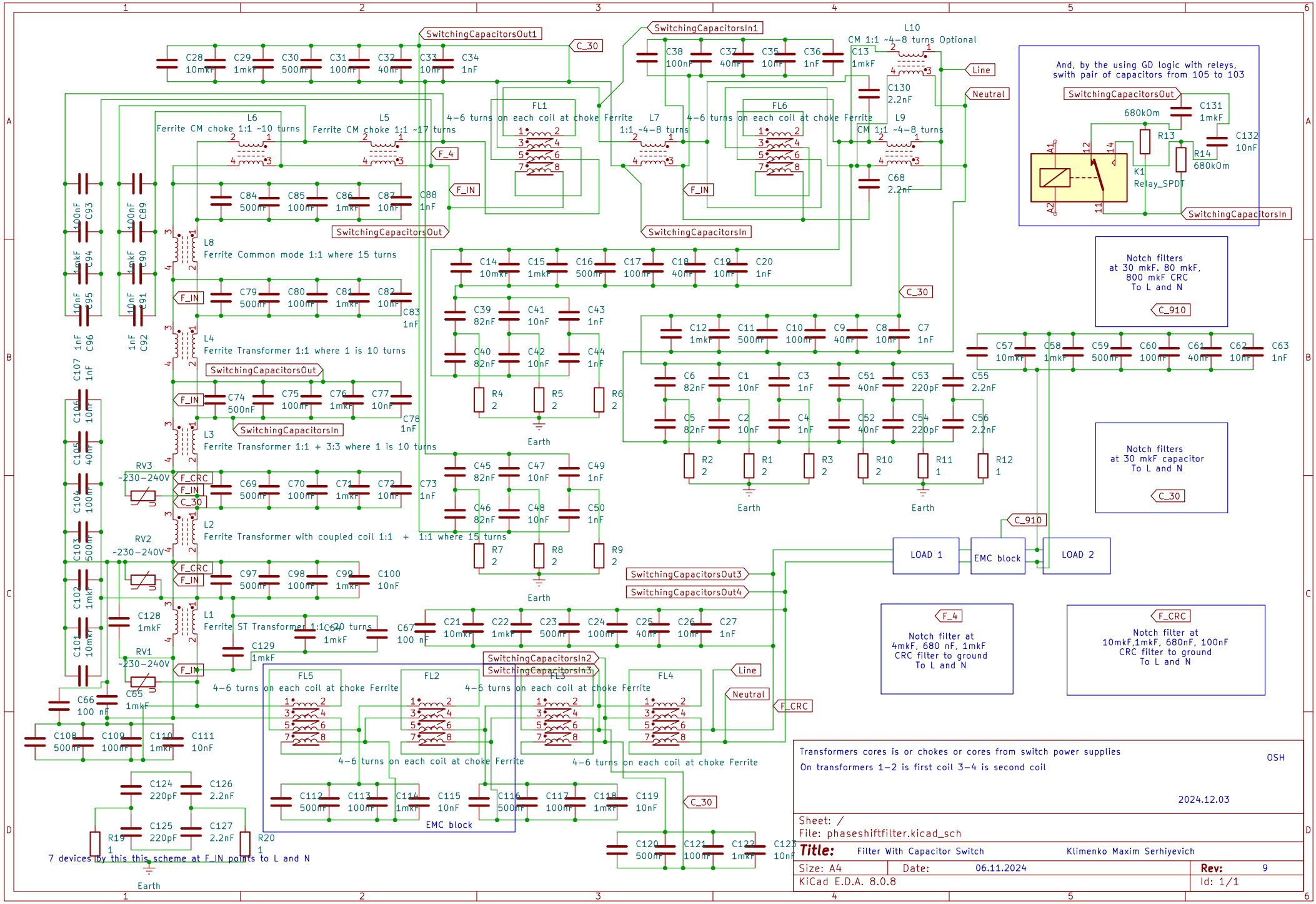
SwitchingCapacitorsOut1
C_30
SwitchingCapacitorsIn1
L10
CM 1:1 ~4-8 turns Optional
Line
Neutral
And, by the using GD logic with releys, swith pair of capacitors from 105 to 103
SwitchingCapacitorsOut
SwitchingCapacitorsIn
K1
Relay_SPDT
L6
Ferrite CM choke 1:1 ~10 turns
L5
Ferrite CM choke 1:1 ~17 turns
4-6 turns on each coil at choke Ferrite
FL1
L7
1:1 ~4-8 turns
FL6
L9
CM 1:1 ~4-8 turns
F_4
F_IN
L8
Ferrite Common mode 1:1 where 15 turns
L4
Ferrite Transformer 1:1 where 1 is 10 turns
L3
Ferrite Transformer 1:1 + 3:3 where 1 is 10 turns
L2
Ferrite Transformer with coupled coil 1:1 + 1:1 where 15 turns
L1
Ferrite ST Transformer 1:1 20 turns
RV3
~230-240V
RV2
~230-240V
RV1
~230-240V
F_CRC
Earth
Notch filters at 30 mkF, 80 mkF, 800 mkF CRC To L and N
C_910
Notch filters at 30 mkF capacitor To L and N
LOAD 1
EMC block
LOAD 2
SwitchingCapacitorsOut3
SwitchingCapacitorsOut4
SwitchingCapacitorsIn2
SwitchingCapacitorsIn3
FL5
FL2
FL3
FL4
EMC block
Notch filter at 4mkF, 680 nF, 1mkF CRC filter to ground To L and N
Notch filter at 10mkF,1mkF, 680nF, 100nF CRC filter to ground To L and N
7 devices by this this scheme at F_IN points to L and N
Transformers cores is or chokes or cores from switch power supplies
On transformers 1-2 is first coil 3-4 is second coil
OSH
2024.12.03
Sheet: /
File: phaseshiftfilter.kicad_sch
Title: Filter With Capacitor Switch
Klimenko Maxim Serhiyevich
Size: A4
Date: 06.11.2024
Rev: 9
KiCad E.D.A. 8.0.8
Id: 1/1