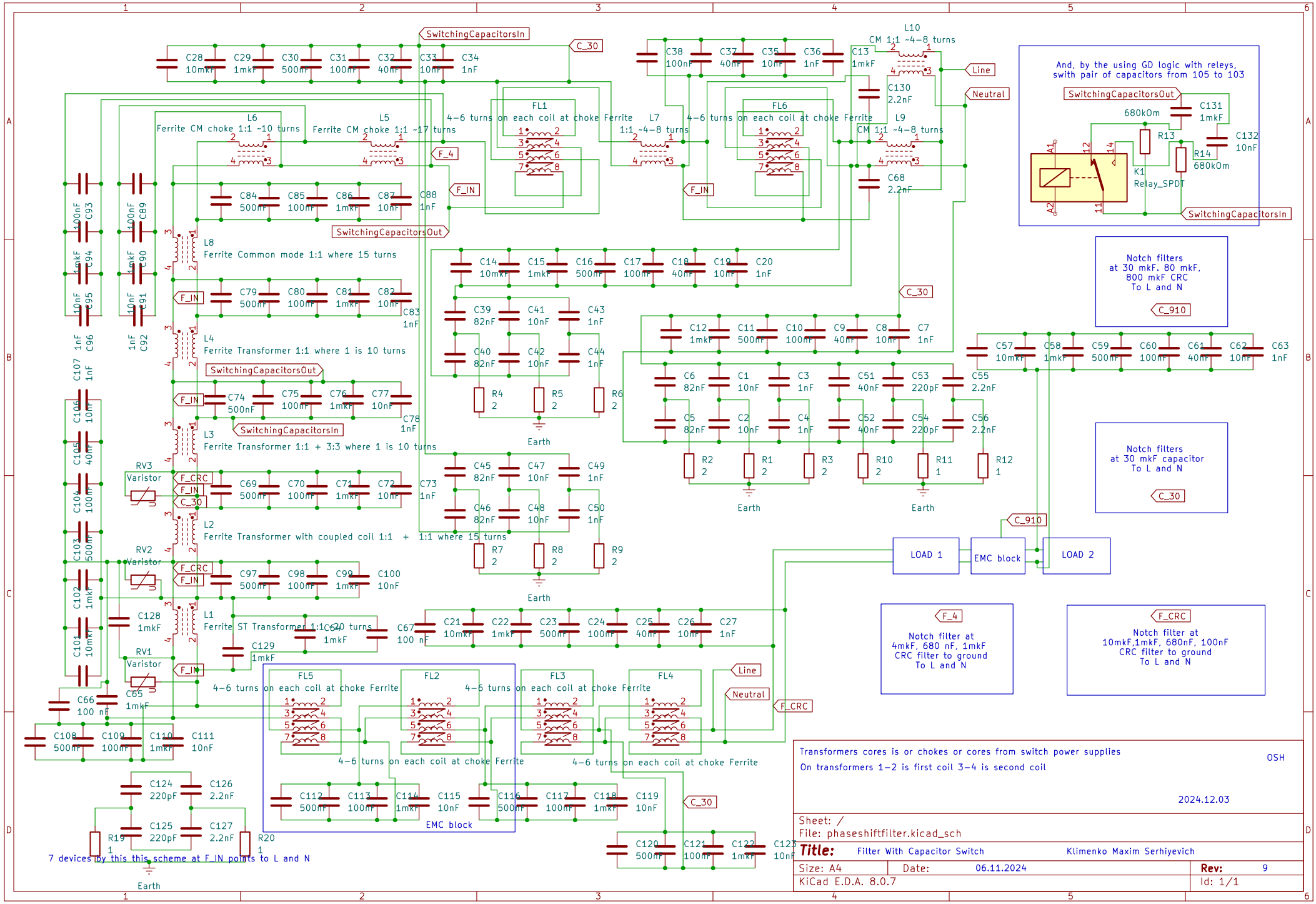
SwitchingCapacitorsIn
C_30
C28 10mkF
C29 1mkF
C30 500nF
C31 100nF
C32 40nF
C33 10nF
C34 1nF
C38 100nF
C37 40nF
C35 10nF
C36 1nF
C13 1mkF
L10
CM 1:1 ~4-8 turns
Line
Neutral
C130 2.2nF
FL1
4-6 turns on each coil at choke Ferrite
L7
1:1 ~4-8 turns
FL6
L9
CM 1:1 ~4-8 turns
C68 2.2nF
L6
Ferrite CM choke 1:1 ~10 turns
L5
Ferrite CM choke 1:1 ~17 turns
F_4
F_IN
C84 500nF
C85 100nF
C86 1mkF
C87 10nF
C88 1nF
SwitchingCapacitorsOut
L8
Ferrite Common mode 1:1 where 15 turns
C79 500nF
C80 100nF
C81 1mkF
C82 10nF
C83 1nF
L4
Ferrite Transformer 1:1 where 1 is 10 turns
C74 500nF
C75 100nF
C76 1mkF
C77 10nF
C78 1nF
L3
Ferrite Transformer 1:1 + 3:3 where 1 is 10 turns
RV3
Varistor
F_CRC
C69 500nF
C70 100nF
C71 1mkF
C72 10nF
C73 1nF
L2
Ferrite Transformer with coupled coil 1:1 + 1:1 where 15 turns
RV2
Varistor
C97 500nF
C98 100nF
C99 1mkF
C100 10nF
L1
Ferrite ST Transformer 1:1 ~20 turns
C128 1mkF
C64 1mkF
C129 1mkF
RV1
Varistor
C65 1mkF
C66 100 nF
C67 100 nF
C14 10mkF
C15 1mkF
C16 500nF
C17 100nF
C18 40nF
C19 10nF
C20 1nF
C39 82nF
C41 10nF
C43 1nF
C40 82nF
C42 10nF
C44 1nF
R4 2
R5 2
R6 2
Earth
C12 1mkF
C11 500nF
C10 100nF
C9 40nF
C8 10nF
C7 1nF
C6 82nF
C1 10nF
C3 1nF
C51 40nF
C53 220pF
C55 2.2nF
C5 82nF
C2 10nF
C4 1nF
C52 40nF
C54 220pF
C56 2.2nF
R2 2
R1 2
R3 2
R10 2
R11 1
R12 1
C57 10mkF
C58 1mkF
C59 500nF
C60 100nF
C61 40nF
C62 10nF
C63 1nF
C45 82nF
C47 10nF
C49 1nF
C46 82nF
C48 10nF
C50 1nF
R7 2
R8 2
R9 2
C21 10mkF
C22 1mkF
C23 500nF
C24 100nF
C25 40nF
C26 10nF
C27 1nF
C_910
LOAD 1
EMC block
LOAD 2
And, by the using GD logic with releys, swith pair of capacitors from 105 to 103
680kOm
C131 1mkF
R13
R14 680kOm
C132 10nF
K1
Relay_SPDT
A1
A2
12
14
11
Notch filters at 30 mkF, 80 mkF, 800 mkF CRC To L and N
Notch filters at 30 mkF capacitor To L and N
F_4
Notch filter at 4mkF, 680 nF, 1mkF CRC filter to ground To L and N
F_CRC
Notch filter at 10mkF,1mkF, 680nF, 100nF CRC filter to ground To L and N
FL5
FL2
FL3
FL4
4-6 turns on each coil at choke Ferrite
C108 500nF
C109 100nF
C110 1mkF
C111 10nF
C112 500nF
C113 100nF
C114 1mkF
C115 10nF
C116 500nF
C117 100nF
C118 1mkF
C119 10nF
EMC block
C120 500nF
C121 100nF
C122 1mkF
C123 10nF
C124 220pF
C126 2.2nF
C125 220pF
C127 2.2nF
R19 1
R20 1
7 devices by this this scheme at F_IN points to L and N
Transformers cores is or chokes or cores from switch power supplies
On transformers 1-2 is first coil 3-4 is second coil
OSH
2024.12.03
Sheet: /
File: phaseshiftfilter.kicad_sch
Title: Filter With Capacitor Switch
Klimenko Maxim Serhiyevich
Size: A4
Date: 06.11.2024
Rev: 9
KiCad E.D.A. 8.0.7
Id: 1/1