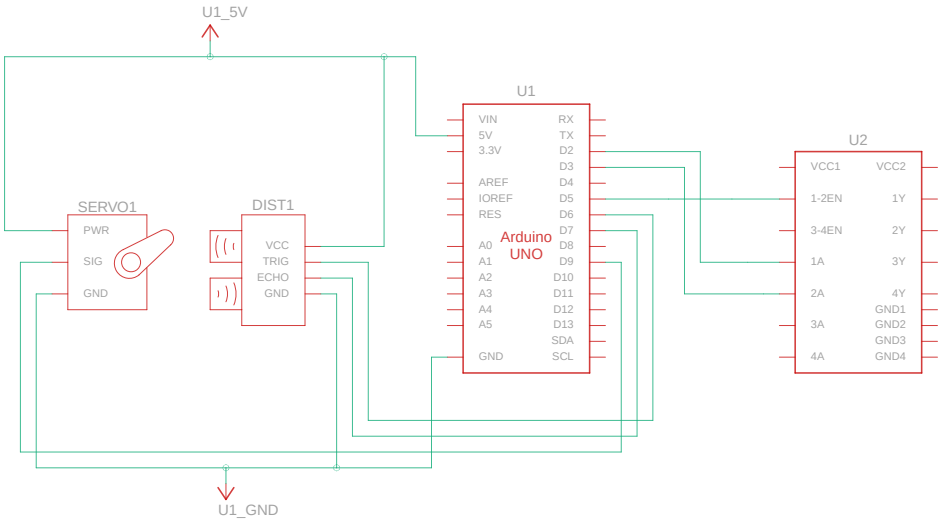

Made with Tinkercad®

Title: Smart Servo Reaction System	
Date: 5/8/2025 10:40:57	Sheet: 1/1