University Of Asia Pacific

Department of Computer Science and Engineering

CSE 316: Microprocessors and Microcontrollers Lab

LAB REPORT

Experiment Number: 01

Experiment Title: Traffic Light Control Using Servo Motor and LEDs

Date of Submission: 21st February 2026

Submitted by:

Name : Faiaz Masnun Labib

Student ID : 23101128

Section : C-1

Submitted To:

Nakiba Nuren Rahman

Lecturer, Department of Computer Science and Engineering, UAP

Table of Contents

1. Experiment Name:..... 3
2. Objective: 3
3. Hardware & Software Requirements: 3
4. Circuit Diagram:..... 3
5. Code / Assembly Program:..... 4
6. Output / Observations:..... 5
7. Result:..... 7
8. Conclusion:..... 7

1. Experiment Name:

Mini Project 1: Traffic Light Control Using Servo Motor and LEDs.

2. Objective:

To design and implement a microcontroller-based traffic light control system using LEDs and a servo motor to simulate both traffic signals and barrier gate control.

3. Hardware & Software Requirements:

- **Microcontroller:** 1 × Arduino Uno R3
- **Actuators:**
- **Software:**
  - i. Arduino IDE
  - ii. Tinker CAD
- **Other Components:**
  - i. 1 × Breadboard
  - ii. Jumper Wires
  - iii. 3 × Resistors
  - iv. 1 × USB Cable

4. Circuit Diagram:

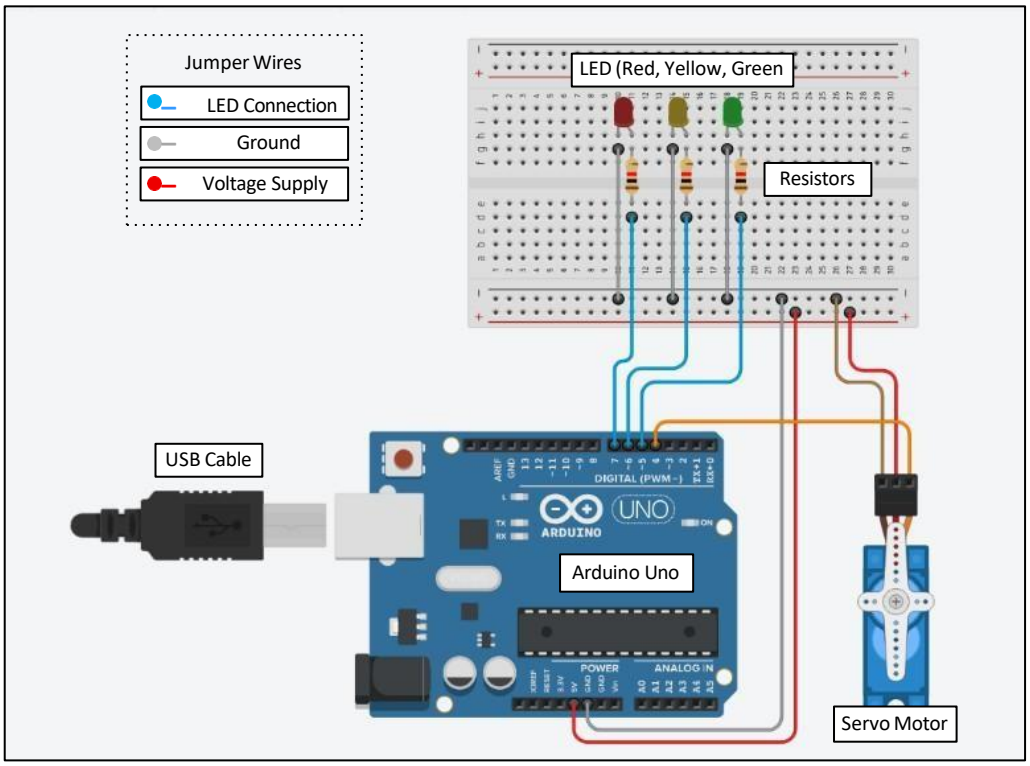

Figure 1: Circuit diagram of a Traffic Light Control System using Servo Motor and LEDs

5. Code / Assembly Program:

```
//Traffic Light Control using Servo Motor and LEDs

#include<Servo.h>
Servo servo;

int LEDred = 2;
int LEDyellow = 3;
int LEDgreen = 4;

void setup()
{
  pinMode(LEDred, OUTPUT);
  pinMode(LEDyellow, OUTPUT);
  pinMode(LEDgreen, OUTPUT);

  servo.attach(4);
}

void loop()
{
  //Green
  digitalWrite(LEDgreen, HIGH);
  digitalWrite(LEDyellow, LOW);
  digitalWrite(LEDred, LOW);
  servo.write(90);
  delay(5000); // Wait for 5000 millisecond(s)

  //Yellow
  digitalWrite(LEDgreen, LOW);
  digitalWrite(LEDyellow, HIGH);
  digitalWrite(LEDred, LOW);
  delay(2000); // Wait for 2000 millisecond(s)

  //Red
  digitalWrite(LEDgreen, LOW);
  digitalWrite(LEDyellow, LOW);
  digitalWrite(LEDred, HIGH);
  servo.write(0);
  delay(5000); // Wait for 5000 millisecond(s)
}
```

6. Output / Observations:

The LEDs and servo motor started working in a repeating cycle just like a miniature traffic signal with a barrier gate:

a) **Green → Yellow:** First, the green LED turned on for about 5 seconds while the servo rotated to about 90°, simulating an open gate.

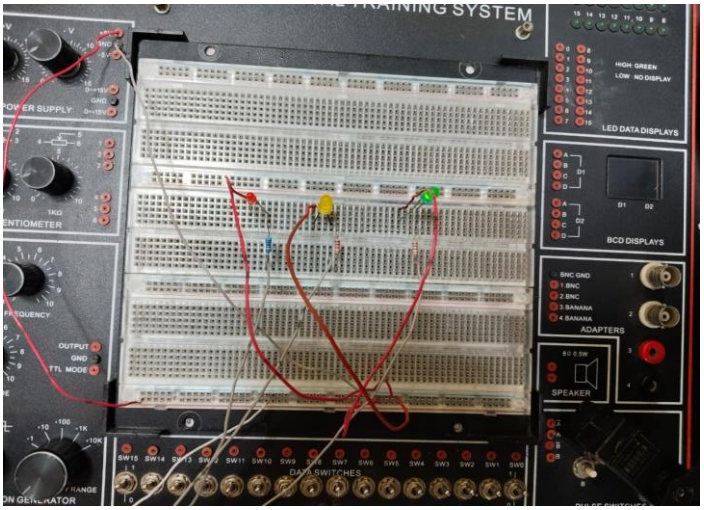

b) **Yellow → Red**: Then, the yellow LED lit up for 2 second, acting as a transition between red and green. The servo stayed in its last position.

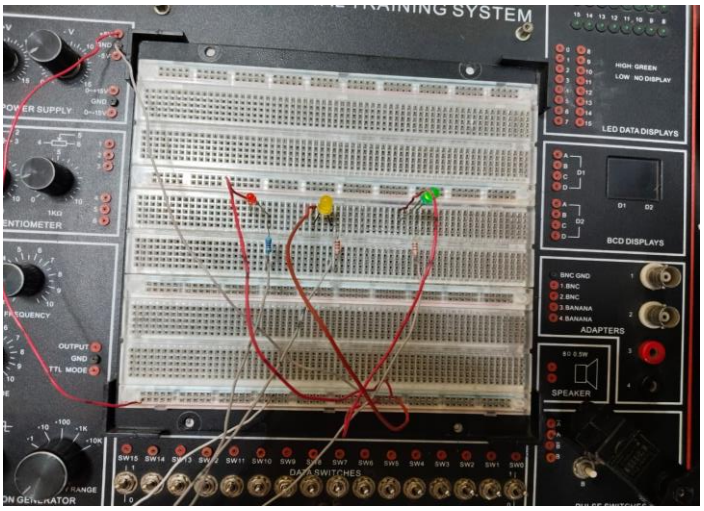

c) **Red → Green:** Finally, the red LED turned on for 5 seconds, and at the same time, the servo moved back to 0°, simulating a closed gate.

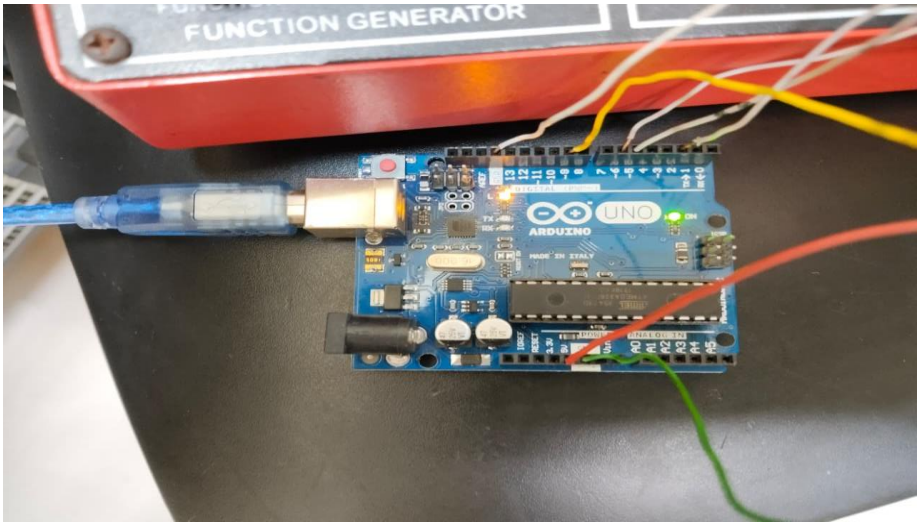

This sequence continuously repeats, resembling a simplified real-world traffic light and barrier system.

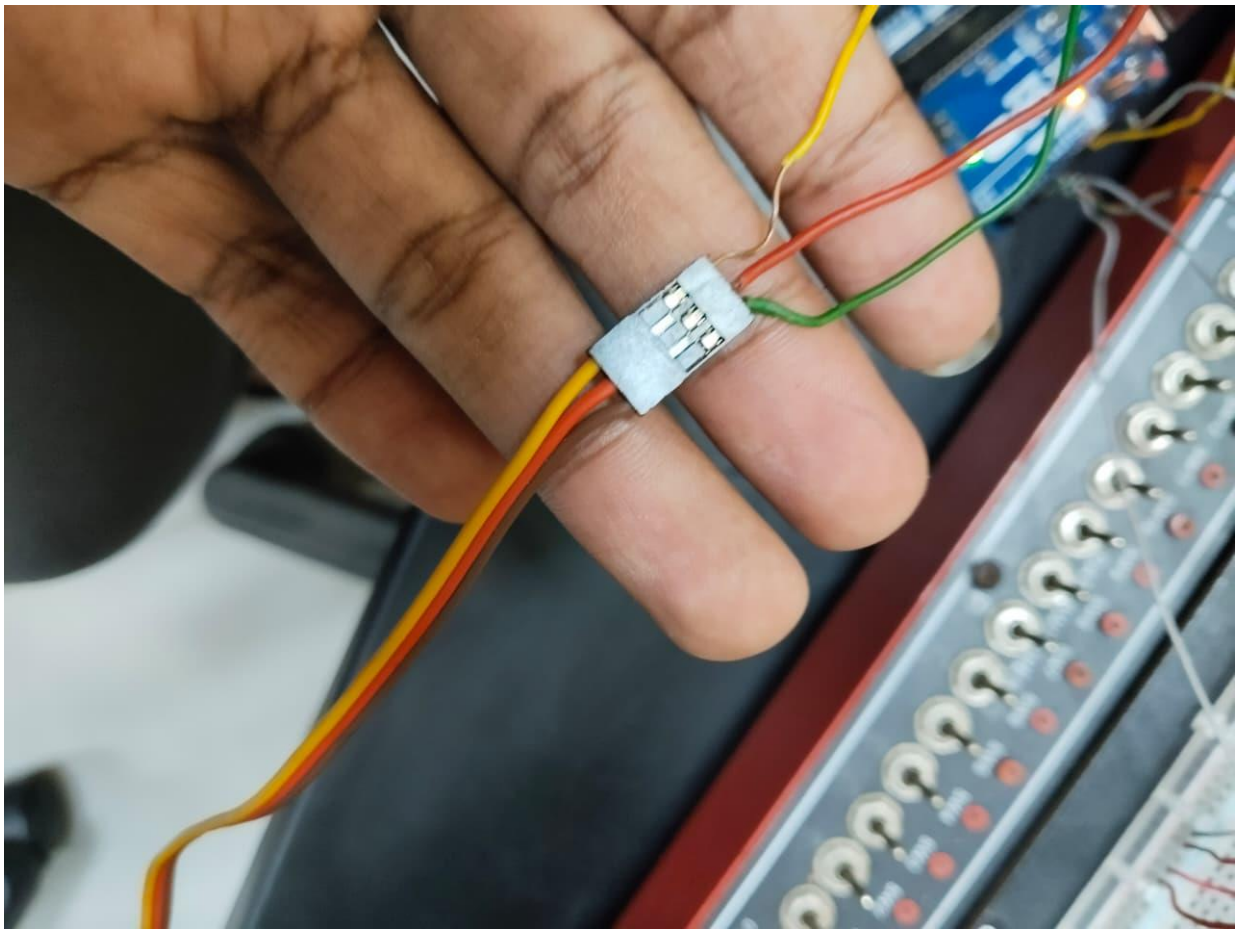

7. Result:

The implementation successfully demonstrated a working model of traffic light control with barrier actuation. The program executed the light transitions in the correct order and maintained precise timing between phases. The servo responded reliably, opening during the green phase and closing during the red phase, thereby integrating a mechanical element into the signaling sequence. As observed:

- The green light lasted for 5 seconds with the barrier in the open position.
- The yellow light lasted for 2 second with no servo movement.
- The red light lasted for 5 seconds with the barrier in the closed position.

The experiment achieved its stated objective: to design and implement a microcontroller- based traffic light system that coordinates both visual signals and physical actuation. The outcome confirms that relatively simple hardware components, when combined with appropriate programming, can be used to prototype real-world control systems effectively.

8. Conclusion:

This project highlighted the practicality of using microcontrollers for synchronized, multi-component control tasks. The integration of LEDs and a servo motor into a cohesive sequence demonstrated not only the basics of traffic light simulation but also the potential for extending such systems into larger, more complex applications.

The project also signified the importance of timing, state sequencing, and reliable actuation in embedded system design. While the model is small-scale, the same principles underlie real-world systems such as automated road signals, parking gates, and railway crossings.

The experiment thus served as both a functional prototype and a learning exercise in applied microcontroller programming. By completing this project, I learned how to combine logic, timing, and actuation in microcontroller programming. This provides a foundation for more advanced projects in the future.