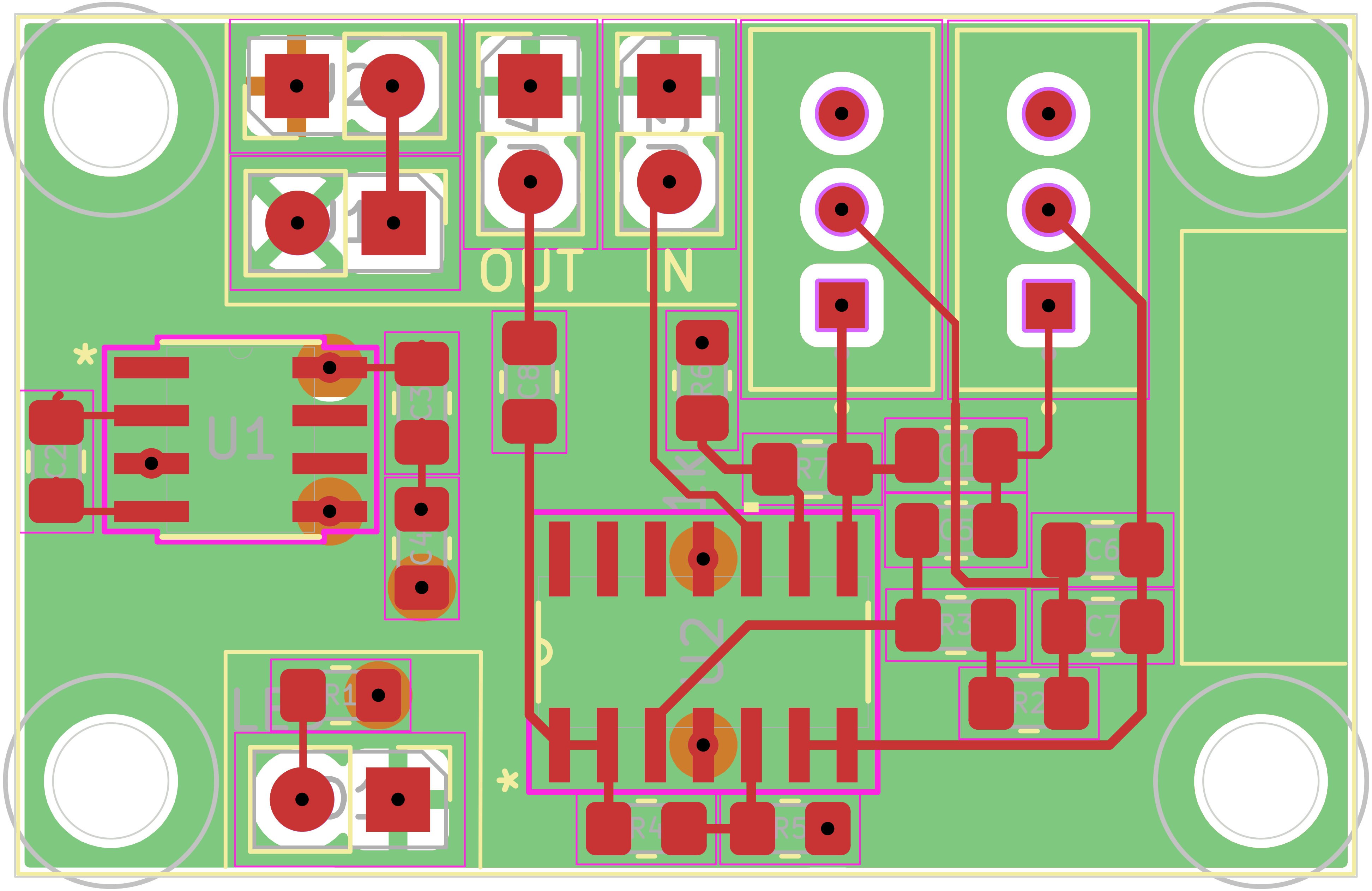
OUT
IN
U1
C2
C3
C4
C8
R6
R7
C1
C5
C6
C7
R3
R2
U2
R4
R5
R1
LED