UART_TOP

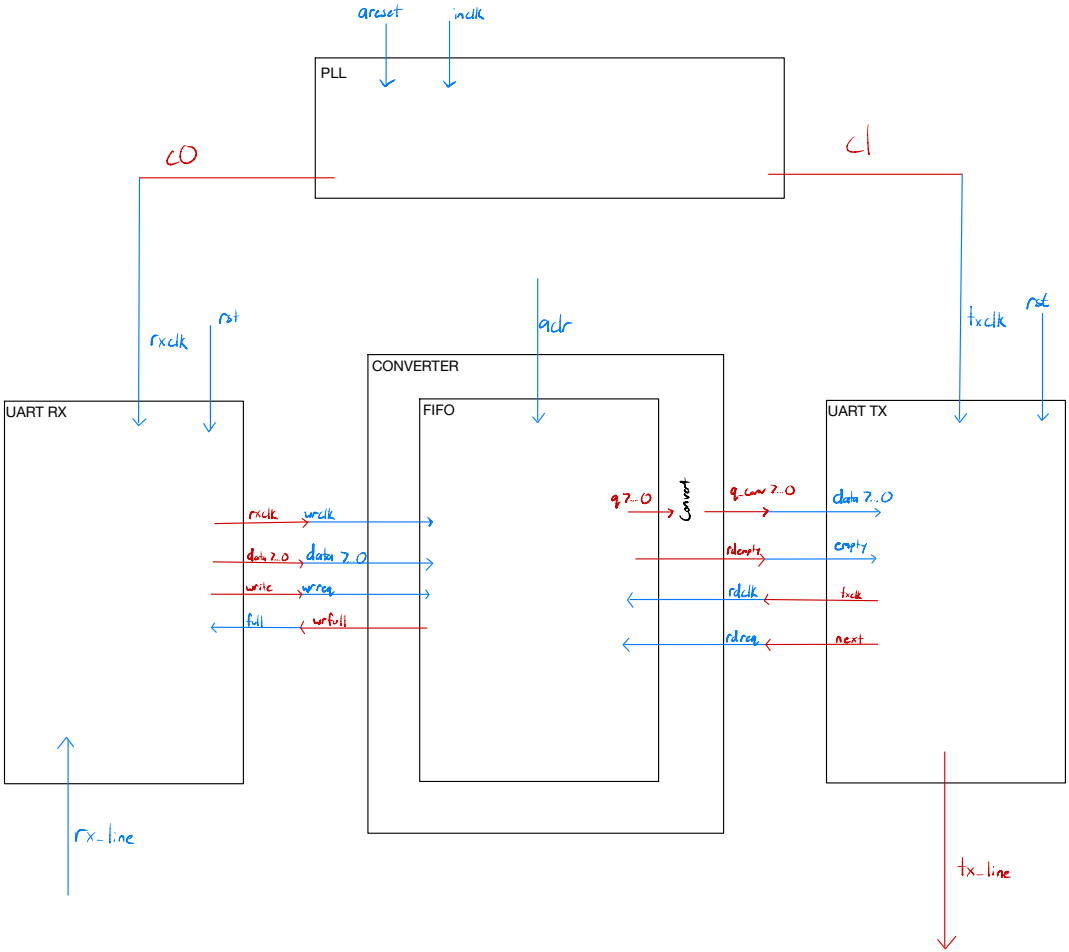
areset
inclk
PLL
c0
c1
rxclk
rst
aclr
txclk
rst
CONVERTER
FIFO
UART RX
UART TX
rxclk
wrclk
data 7..0
data 7..0
write
wrreq
full
wrfull
q7..0
Convert
q_conv 7..0
data 7..0
rdempty
empty
rdclk
txclk
rdreq
next
rx_line
tx_line