ECG-SENSOR

USB

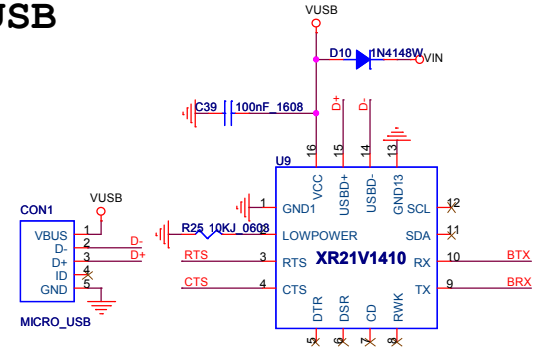

NAND Flash

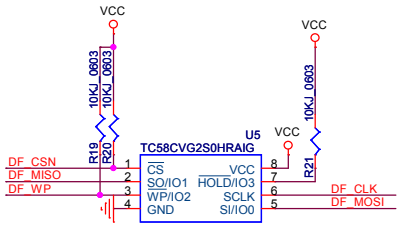

MCU,BLE

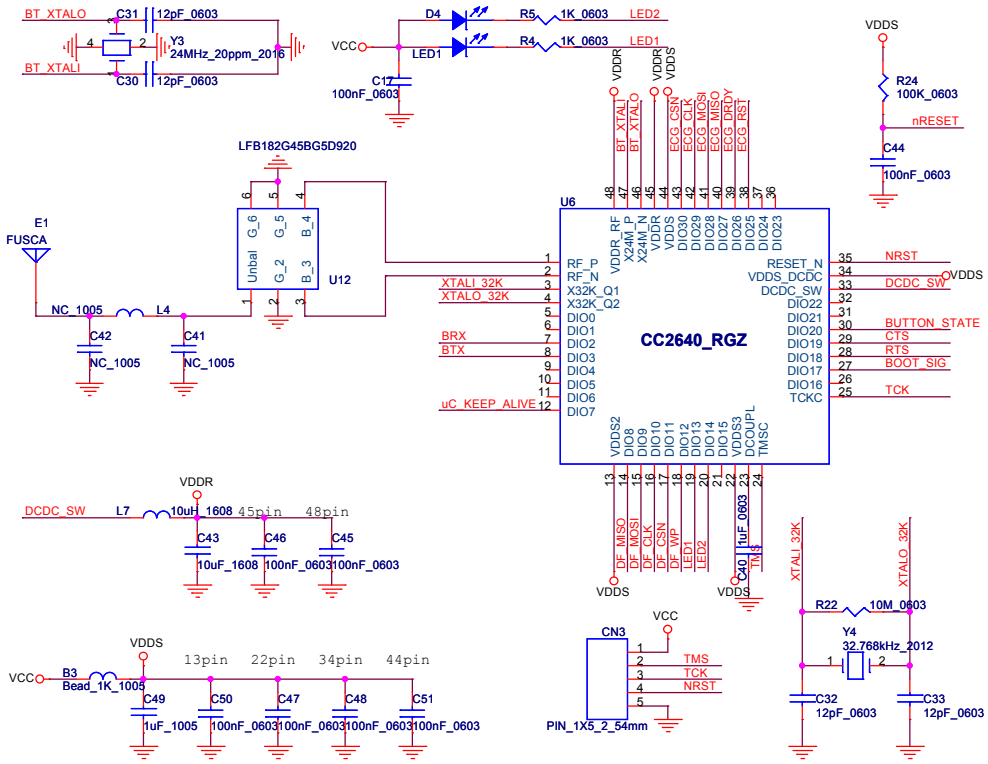

POWER

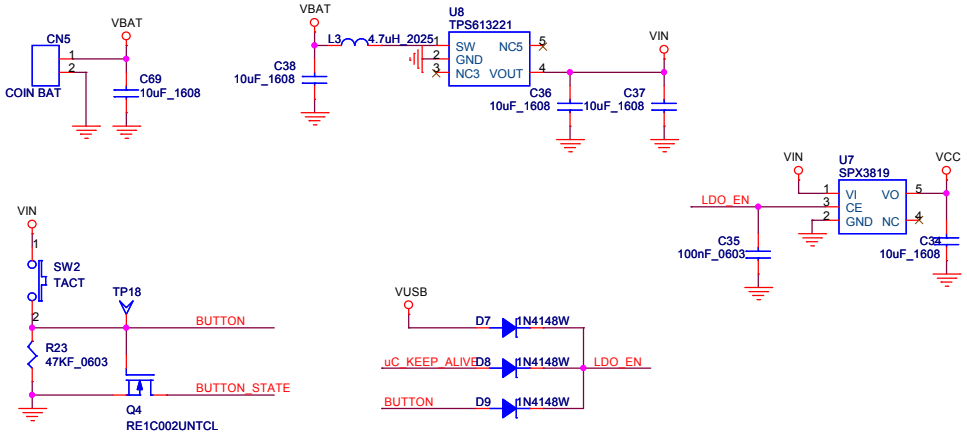

ECG SENSOR

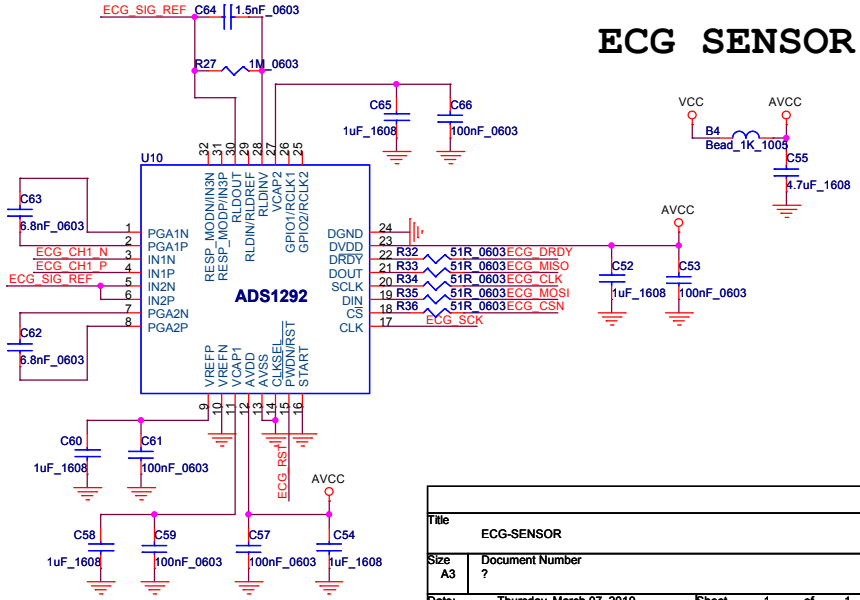

POWER

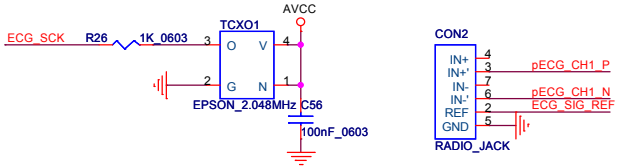

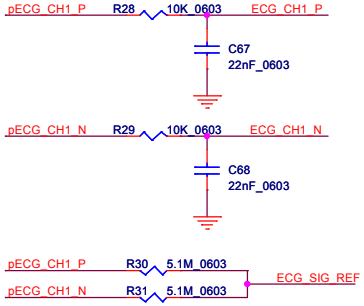

ESD PROTECTION

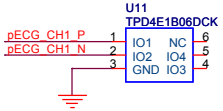

Title	ECG-SENSOR	
Size A3	Document Number ?	Rev 0.1.0
Date: Thursday, March 07, 2019	Sheet 1 of 1	