CARPENTRY SHOP

FIRST CLASS

Definition/Introduction:

Carpentry may be designed as the process of making wooden articles and components such as roots, floors, partitions, doors and windows. Carpentry involves cutting, shaping and fastening wood and other materials together to produce a finished product. Preparation of joints is one of the important operations in wood work. Joinery denotes connecting the wooden parts using different points such as lap joints, mortise and T- joints, bridle joints, etc.

Safety precaution in Carpentry Shop

1. Tools that are not being used should always be kept at their proper places.
2. Make sure that your hands are not in front of sharp edged tools while you are using them.
3. Use only sharp tools. A dull tool requires excessive pressure, causing the tool to slip.
4. Wooden pieces with nails should never be allowed to remain on the floor.
5. Loose clothing should always be avoided.
6. While using chisels, take care that cutting is performed in the direction away from your body.
7. Most of the modern machines are equipped with proper guards for their moving parts and they should be fully utilized.
8. The floor area al around the machine should always be kept free from any obstructions.
9. No machine should be operated without the permission of the shop incharge.
10. Before starting cutting, allow the saw to attain the full speed.
11. Safety Shoes for protection from cut, burns, heavy impact and more.

TYPES OF WOOD (SOFT WOOD/ HARD WOOD)

Soft Wood	Hard Wood
light in colour.	dark in colour.
lighter in weight.	heavier in weight.
It has straight fibers and fine texture.	It has straight fibers and fine texture.
good tensile resistance and shear resistance.	Poor shear resistance.
relatively less durable.	is more durable.
catches fire easily and cannot. withstand high temperature	does not catch fire easily
easy to work.	difficult to work.

SEASONING OF WOOD

A newly felled tree contains considerable moisture content. If this is not removed, the timber is likely to wrap, shrink, crack or decay. Seasoning is the art of extracting the

moisture content under controlled conditions, at a uniform rate, from all the parts of the timber. Only seasoned wood should be used for all carpentry works. Seasoning makes the wood resilient and lighter. Further, it ensures that the wood will not distort after it is made into an object.

The main object of seasoning is to reduce the moisture content in the wood to the extent it is desirable so as to make it suitable for various purpose. If this excess of unwanted amount of moisture is not taken out of the wood, its presence will render the wood unsuitable due to uneven shrinkage warping or twisting etc.

There are two techniques for seasoning **Natural seasoning & Artificial seasoning**

Natural seasoning

The process of ageing wood by exposing it to the elements of nature, such as air or water is called the natural seasoning of timber.

There are three types of natural seasoning of timber.

Air seasoning

- The earliest, most conventional, and easiest way to season wood is with air. In the process of air seasoning of timber, wood is stacked in the air, and the remaining work is left to be completed by ambient heat and natural air movement.
- It is important to have enough space between each component to allow air to flow through and around the stack.

Water seasoning

- For the goal of seasoning of timber with water, logs are submerged in rivers with their thicker ends pointed upstream.
- Logs are stacked in stacks and secured to a standing tree or other sturdy structure to prevent them from being swept away by the river.
- For two to four weeks, the river water washes the sap from the wood. After that, the logs are removed for additional processing to finish the seasoning of the timber. The last stage involves stacking the identical items in a dry location.

Solar seasoning

- The solar seasoning technique is a substitute for the quick operation of a kiln and the low energy need of air drying.
- Solar seasoning of timber offers a compromise for several disadvantages of traditional seasoning processes.
- One may describe solar seasoning as a slower, more delicate version of kiln drying. Compared to air dryers, timber solar dryers dramatically lowers drying time and flaws.

Artificial seasoning

Natural seasoning produces good results, although it is time-consuming. Therefore, artificial seasoning of timber is presently being researched. It takes around four to five days for the artificial seasoning of timber.

There are five methods for the artificial seasoning of timber.

Boiling

- Boiling the timber before utilisation gives it the necessary character traits for its particular use.
- Using this technique, wood is submerged in water and cooked for three to four hours while being watched. The needed amount of sap in the water is removed during boiling.
- Instead of boiling, this procedure might be carried out by running the stream over the wood. Although boiling is a quick procedure, the energy it requires drains the economy. As a result, the procedure saves time but is expensive.

Kiln seasoning

- One of the popular methods used in the numerous industrial procedures for seasoning of timber is kiln drying.
- Using external energy speeds up the driving out of moisture in this process, which speeds up the seasoning of the wood.
- The lumber is stacked here in a manner like that used in the air-drying process, and it is then put inside a chamber with the ability to change the environment to get the optimum seasoning results.
- Depending on the need for seasoning, the kiln's conditions can be modified.

Chemical seasoning

- This chemical seasoning procedure seasons the timber using high-value applications. Rifle butts, golf club heads, and carvings can all benefit from this treatment if the wood is fully free of surface checks.
- Chemical seasoning of timber, which involves dipping wood in sodium chloride or sodium nitrate solution, is often referred to as salt seasoning.
- Salts like sodium chloride or sodium nitrate can pull moisture from a wood's interior.

Electrical seasoning

- High-frequency alternating current is used electrically in the seasoning of timber by passing it through the wood.
- When an electrical current is applied to wood, heat may be produced, which kickstarts the drying process.
- This process of drying lumber is done under the guidance of professionals to assure security.
- The moisture content of wood decreases significantly, and electrical resistance rises as seasoning progresses.

ANNUAL RINGS:

Annual rings are the visible patterns of growth in the cross-section of a tree trunk. They represent one year's growth and provide valuable information about a tree's age, climate conditions, and history.

How Annual Rings Form

Trees grow in layers. Each year, a new layer of wood is added to the trunk. This layer is divided into two parts:

- **Springwood:** Lighter in color, formed during the growing season when conditions are favorable.
- **Summerwood**: Darker in color, formed later in the year when growth slows down.

The contrast between these two types of wood creates the visible rings. By counting these rings, you can determine the tree's age.

What Annual Rings Tell Us

- **Age**: The number of rings equals the tree's age.
- **Climate**: The width of each ring can indicate the climate conditions during that year. A wide ring suggests favorable conditions, while a narrow ring indicates a harsher year.
- **Forest History**: Studying patterns in annual rings can reveal information about past forest fires, droughts, and insect outbreaks.
- Importance of Annual Rings
- **Dendrochronology**: This scientific method uses annual rings to date wood and study past climates.
- **Forest management**: Understanding tree growth patterns helps in sustainable forest management.
- **Wood industry**: Information about tree growth is valuable for the timber industry.

In essence, annual rings are like nature's history books, providing a fascinating glimpse into the life of a tree and the environmental conditions it has experienced.

Tools Used in Carpentry Shop

Measuring Tools (Four fold box wood rule, Steel Rule, Inch Tape)

- **Four fold box wood rule** Like a tape measure, the folding rule is also handy for measuring shorter and longer distances. If you need to measure something small, just unfold one section of the ruler. A couple of other things the folding rule can do is it can help measure angles of buildings and other things in the world.

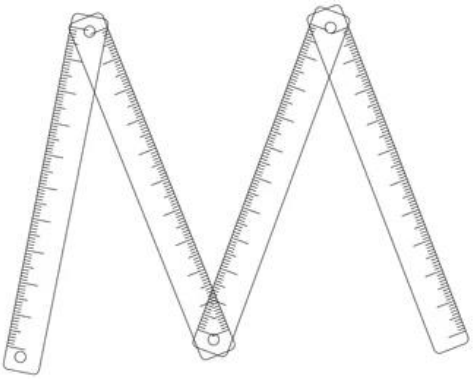

- **Steel Rule and Tape Steel rule** is a simple measuring instrument consisting of a long, thin metal strip with a marked scale of unit divisions. It is an important tool for linear measurement. Steel tape is used for large measurements, such as marking on boards and checking the overall dimensions of the work.

Steel Rule

Tape Steel rule

Marking Tools (Pencil, Scriber, Marking Gauge, Mortise Gauge, Try Square, Bevel, Compass/ Divider)

- Carpenter **pencils** are mainly used for marking rough surface of wood. They create lines that are easy to follow with, for example, a saw blade.

- **Scriber**: A scriber is a hand tool used in metal work to mark lines on workpieces, prior to machining. The process of using a scriber is called scribing and is just part of the process of marking out. It is used instead of pencils or ink lines, because the latter are hard to see, easily erased, and imprecise due to their wide mark; scribe lines are thin and semi-permanent.

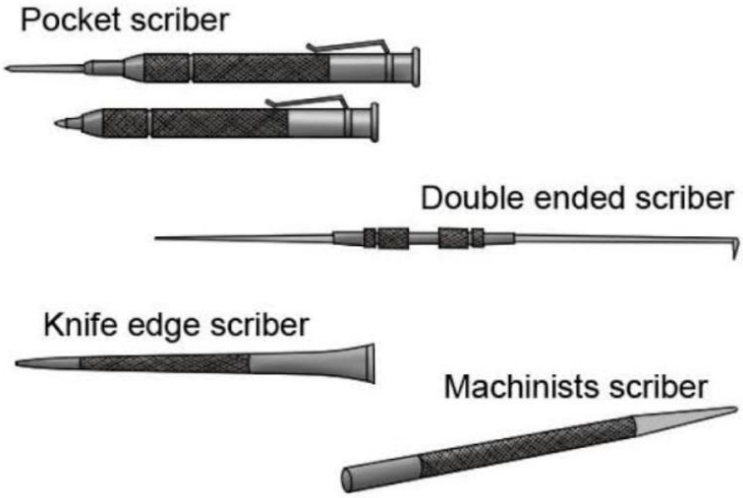

Scriber

- **Mortise Gauge**: It is a tool used to mark lines parallel to the edge of a wooden piece. It consists of a square wooden stem with a sliding wooden stock (head) on it. On the stem is fitted a marking pin, made of steel. The stock is set at any desired distance from the marking point and fixed in position by a screw. It must be ensured that the marking pin projects through the stem, about 3 mm and the end are sharp enough to make a very fine line. A mortise gauge consists of two pins. In this, it is possible to adjust the distance between the pins, to draw two parallel lines on the stock.

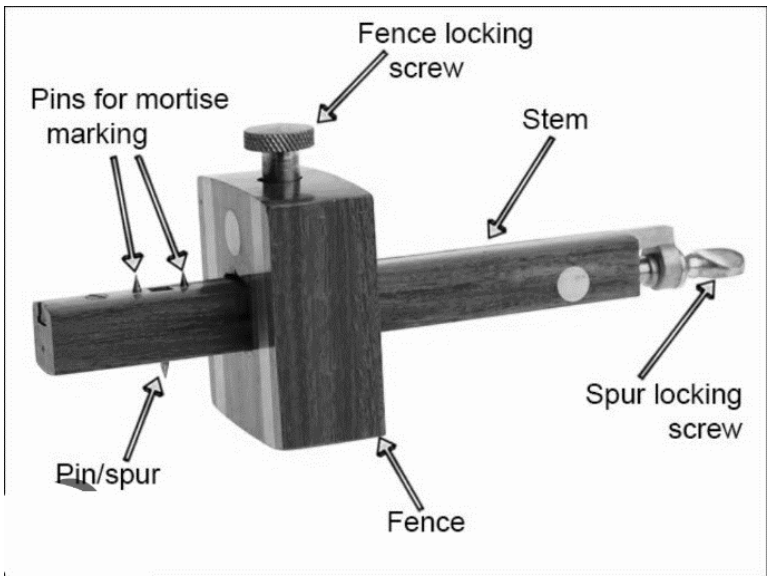

Mortise Gauge

- **Try Square:** It is used for marking and testing the squareness and straightness of planed surfaces. It consists of a steel blade, fitted in a cast iron stock. It is also used for checking the planed surfaces for flatness. Its size varies from 150 to 300 mm, according to the length of the blade. It is less accurate when compared to the try-square used in the fitting shop.

Try Square

- **Bevel Square:** It is used for laying-out and checking angles. The blade of the bevel is adjustable and may be held in place by a thumb screw. After it is set to the desired angle, it can be used in much the same way as a try-square. A good way to set it to the required angle is to mark the angle on a surface and then adjust the blade to fit the angle

Bevel Square

- **Compass and Divider:** Compass and divider, are used for marking arcs and circles on the planed surfaces of the wood.

Compass/ Divider

Cutting Tools (Saws such as Rip/Tenon/Compass/Coping/Key Hole or Pad Saw, Cross-Cut/Bow)

Setting of saw teeth

Chisels such as Firmer, Mortise, Gouge chisel, Adze, Axe, Side axe)

- **Rip saw:** It is used for cutting the stock along the grains. The cutting edge of this saw makes a steeper angle, i.e., about 60° whereas that of crosscut saw makes an angle of 45° with the surface of the stock.

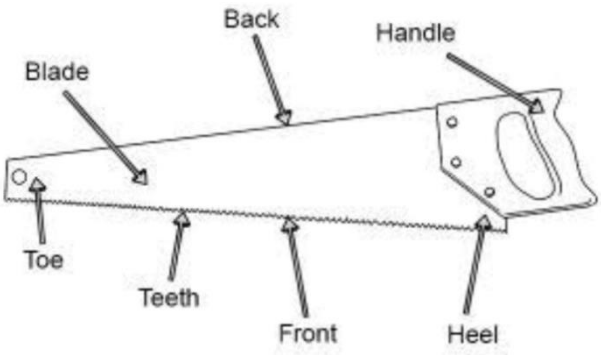

Rip Saw

- **Tenon Saw:** It is used for cutting the stock either along or across the grains. It is used for cutting tenons and in fine cabinet work. However, it is used for small and thin cuts. The blade of this saw is very thin and so it is stiffened with a thick back steel strip. Hence, this is sometimes called as back-saw. In this, the teeth are shaped like those of cross-cut saw.

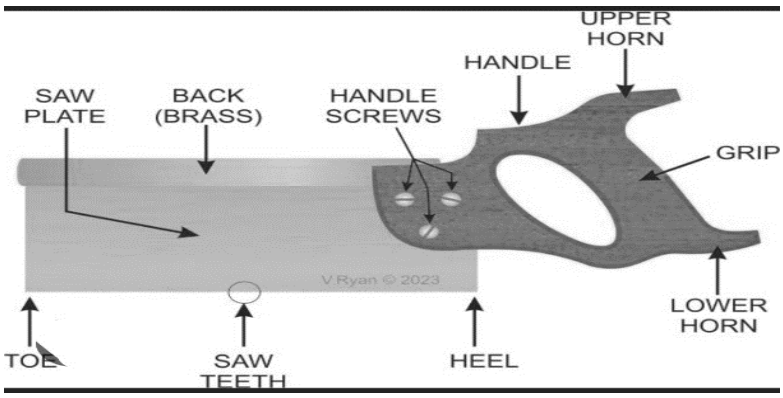

Tenon Saw

- **Coping saw:** It is a type of bow saw used to cut intricate external shapes and interior cut-outs in woodworking or carpentry. It is widely used to cut moldings to create coped rather than mitre joints. Coping saw blades are always thicker and much coarser cutting than typical fretsaw blades and many others of its family members. Coping saws can however cut slight bends in the work, allowing circles to be cut if used carefully.

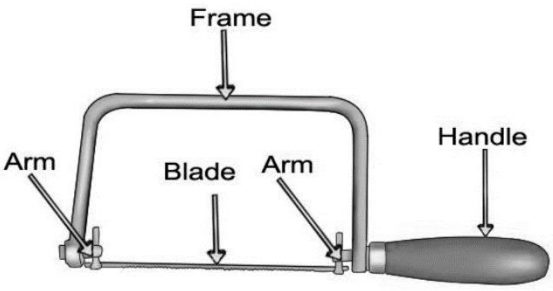

Coping Saw

- **Compass Saw:** It has a narrow, longer and stronger tapering blade, which is used for heavy works. It is mostly used in radius cutting. The blade of this saw is fitted with an open type wooden handle.

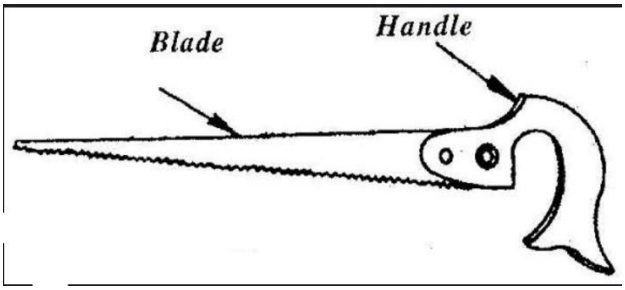

Compass Saw

- A **keyhole saw** (also called a **pad saw**, **alligator saw**, **jab saw** or **drywall saw**) is a long, narrow saw used for cutting small, often awkward features in various building materials

Key-hole Saw

- A **crosscut saw** (**thwart saw**) is any saw designed for cutting wood perpendicular to (across) the wood grain. Crosscut saws may be small or large, with small teeth close together for fine work like woodworking or large for coarse work like log bucking, and can be a hand tool or power tool.

The cutting edge of each tooth is angled in an alternating pattern. This design allows each tooth to act like a knife edge and slice through the wood in contrast to a rip saw, which tears along the grain, acting like a miniature chisel. Some crosscut saws use special teeth, called rakers, designed to clean out the cut strips of wood from the kerf. Crosscut saws generally have smaller teeth than rip saw

Cross-Cut/Bow Saw

Chisels are used for cutting and shaping wood accurately. Wood chisels are made in various blade widths, ranging from 3 to 50 mm . Most of the wood chisels are made into tang type, having a steel shank which fits inside the handle.

- **Firmer chisel**: The word 'firmer' means 'stronger' and hence firmer chisel is stronger than other chisels. It is a general-purpose chisel and is used either by hand pressure or by a mallet. The blade of a firmer chisel is flat

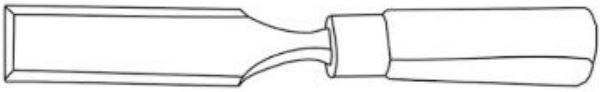

- **Mortise chisel**: It is used for cutting mortises and chipping inside holes, etc. The cross-section of the mortise chisel is proportioned to withstand heavy blows during mortising. Further, the cross section is made stronger near the shank.

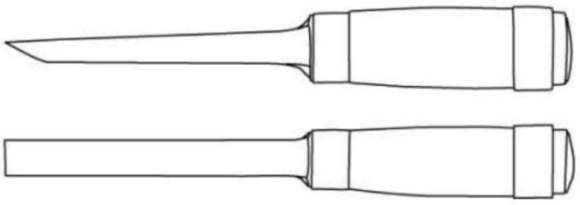

- **The Gouge** is a chisel with a rounded or angular tip used cut curves and hollows. The tools and materials you will need are a gouge, a mallet, a vice and a workpiece. The blade of the Gouge is attached to the wooden handle by means of a tang or socket. The steel ring around the head helps withstand mallet blows.

Gouge chisel

- An **adze** or **adz** is an ancient and versatile cutting tool similar to an axe but with the cutting edge perpendicular to the handle rather than parallel. They are used for smoothing or carving wood in hand woodworking, and as a hoe for agriculture and horticulture.

Adze

- **AXE**: The carving axe, also known as a hewing axe or a carpenter's axe, is a smaller and lighter axe for shaping and carving wood. It has a thin and narrow blade, allowing for precise cuts and controlled removal of wood.

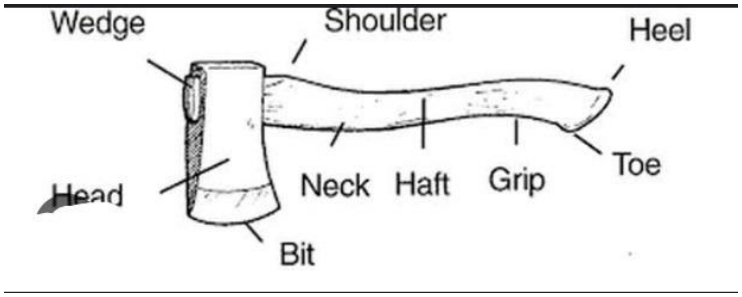

<u>Smoothing Tools</u> (Planes such as Wooden jack plane, Iron jack plane, Trying plane, Rebate plane, Plough plane), Spoke shave, Rasp file

Planing tools Planing is the operation used to produce flat surfaces on wood. A plane is a hand tool used for this purpose. The cutting blade used in a plane is very

similar to a chisel. The blade of a plane is fitted in a wooden or metallic block, at an angle

- **Jack plane** It is the most commonly used general purpose plane. It is about 35 cm long. The cutting iron (blade) should have a cutting edge of slight curvature. It is used for quick removal of material on rough work and is also used in oblique planning.

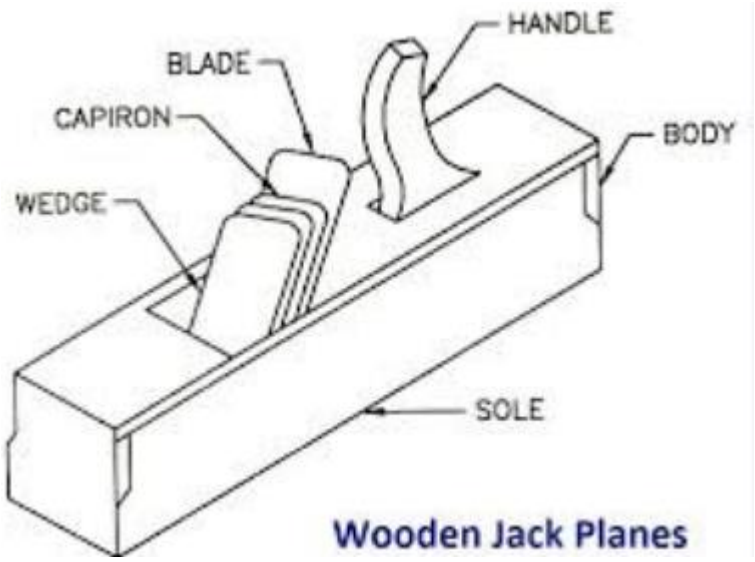

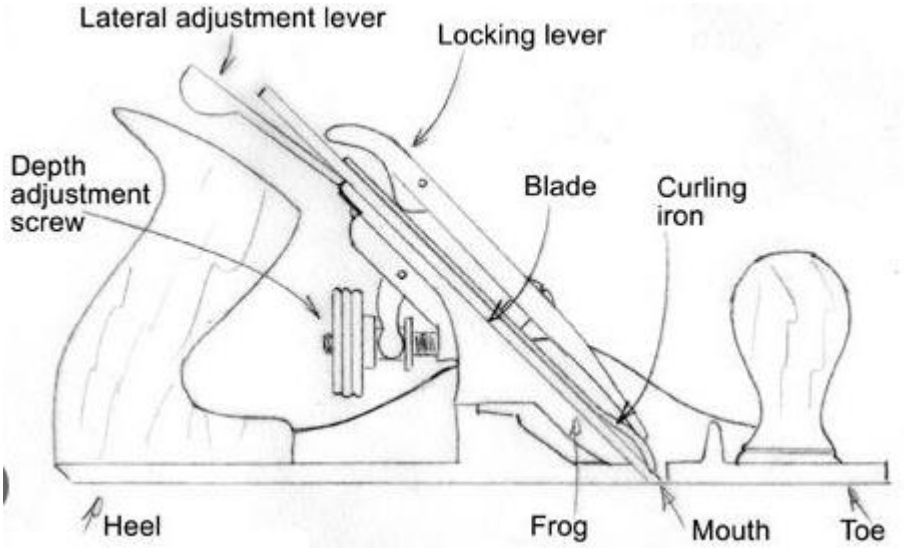

Iron jack plane

- **Rebate plane:** It is used for making a rebate. A rebate is a recess along the edge of a piece of wood, which is generally used for positioning glass in frames and doors

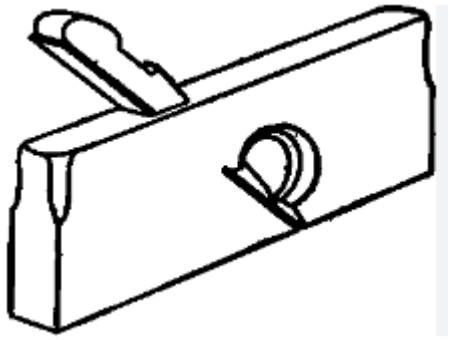

- **Plough plane:** It is used to cut grooves, which are used to fix panels in a door.

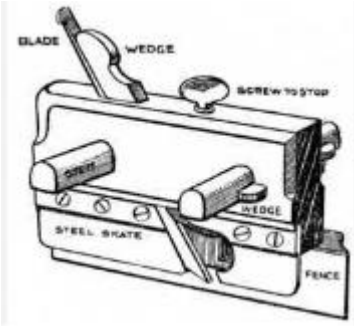

Plough plane

- The **spokeshave** is a shaping and smoothing tool. It can be used in a wide variety of applications such as smoothing internal and externa curves and corners. It is often used to smooth the surface after cutting with chisels or saws.

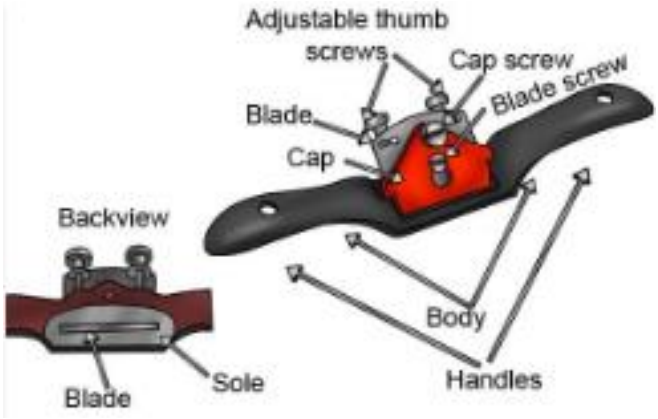

Spokeshave

- A **rasp file** is a coarse form of file used for coarsely shaping wood or other material. Typically a hand tool, it consists of a generally tapered rectangular, round, or half-round sectioned bar of case hardened steel with distinct, individually cut teeth.

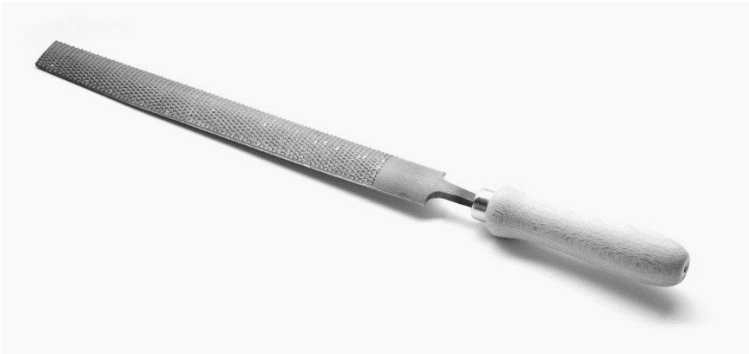

Rasp file

Drilling or Boring Tools (Hand drill, Ratchet brace, Gimlet drill)

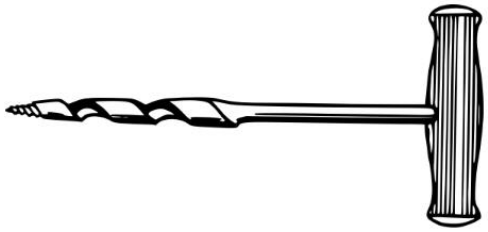

- **Hand drill**: Carpenter's brace is used to make relatively large size holes; whereas hand drill is used for drilling small holes. A straight shank drill is used with this tool. It is small, light in weight and may be conveniently used than the brace. The drill bit is clamped in the chuck at its end and is rotated by a handle attached to gear and pinion arrangement.
- **Gimlet:** It has cutting edges like a twist drill. It is used for drilling large diameter holes with the hand pressure.
- **Carpenter's brace or Ratchet brace** It is used for rotating auger bits, twist drills, etc., to produce holes in wood. In some designs, braces are made with ratchet device. With this, holes may be made in a corner where complete revolution of the handle cannot be made. The size of a brace is determined by its sweep.

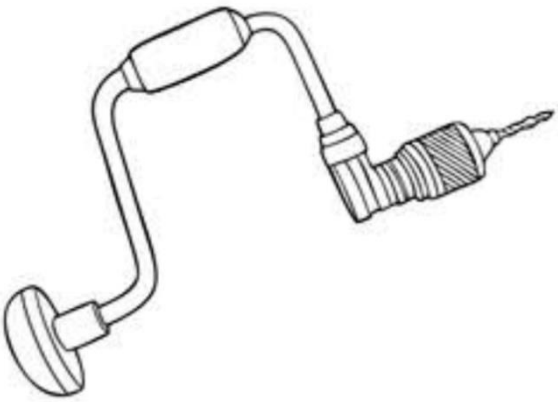

Ratchet brace

Holding Tool (Work bench, Bench hook, Clamping vice, C-Clamp)

The Workshop **workbench** is a sturdy model that can withstand the heavy wear and tear. They range from simple flat surfaces to very complex designs that may be considered tools in themselves.

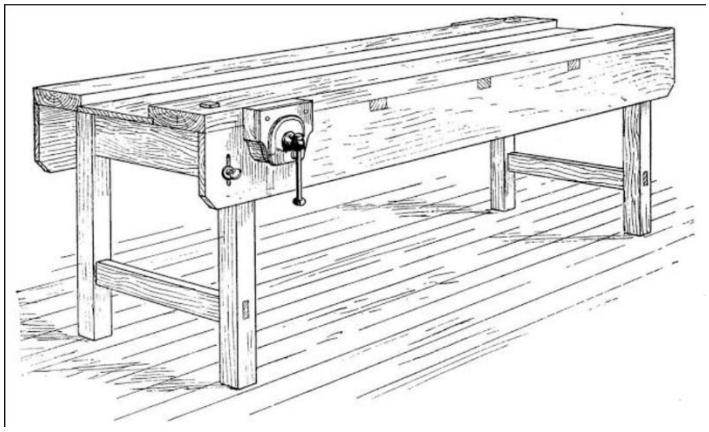

Work bench

- **Carpenter's bench vice**, used as a work holding device in a carpenter shop. Its one jaw is fixed to the side of the table while the other is movable by means of a screw and a handle.

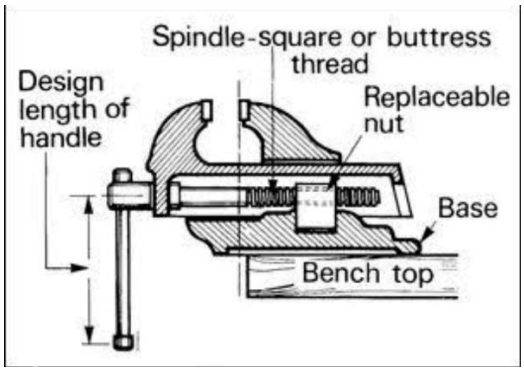

Clamping/Bench vice

- **C-clamp** is made up of malleable iron with acme threads of high quality steel A C-clamp or G-clamp is a type of clamp device typically used to hold a wood or metal workpiece.

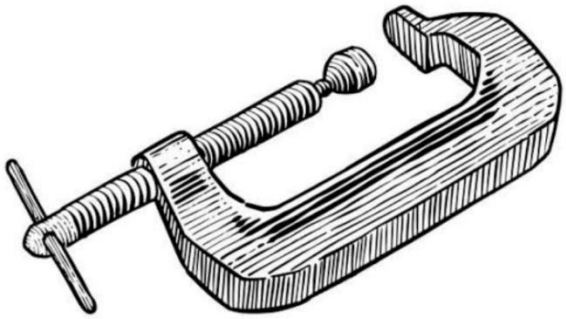

Striking Tool (Cross-peen hammer, Claw hammer, Mallet)

- A **cross peen** is a blade that is perpendicular to the handle. The cross pein can be sharp, rounded, flat, smooth or textured. A cross pein hammer can be used in metal work, stone work, blacksmithing or woodworking. A staight pein is parallel to the handle.

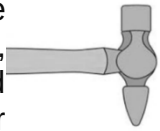

  The chisel-like cross-peen side is used to set small nails and pins while the smaller, rounded face is used to finish driving them in. The cross-peen side of the tool is also used for refining work, such as furniture and cabinet making.

- A **claw hammer** is a hammer primarily used in carpentry for driving nails into or pulling them from wood. Historically, a claw hammer has been associated with woodworking, but is also used in general applications.

- **Mallet** It is a tool of preference for wood workers using chisels with plastic, metal, or wooden handles, as they give a softened strike with a positive drive. Wooden mallets are usually used in carpentry to knock wooden pieces together, or to drive dowels, chisels and to apply pressure on joints.

<u>Sharpening Tool</u> (Oil stone, Triangular file)

- **Oil stones** are a tried-and-true tool used to repair, sharpen and polish cutting tools.

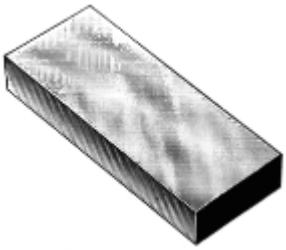

- **Triangular file**

The triangular or three-square file was traditionally used by carpenters to sharpen saw teeth. The file's unique three-sided form allows it to sharpen hard-to-reach places like the gaps between saw teeth.

<u>Different Carpentry Joints with diagrams</u> (Mortise and Tenon joints, Lap or hauling joint, Dove tail joint, Bridle joint, Cross lap joint, Dowel joint)

There are many kinds of joints used to connect wood stock. Each joint has a definite use and requires lay in out, cutting them together. The strength of the joint depends upon amount of contact area. If a particular joint does not have much contact area, then it must be reinforced with nails, screws or dowels.

- **Mortise and Tenon Joints** It is used in the construction of quality furniture. It results in a strong joint and requires considerable skill to make it. The following are the stages involved in the work.

  a) Mark the mortise and tenon layouts.

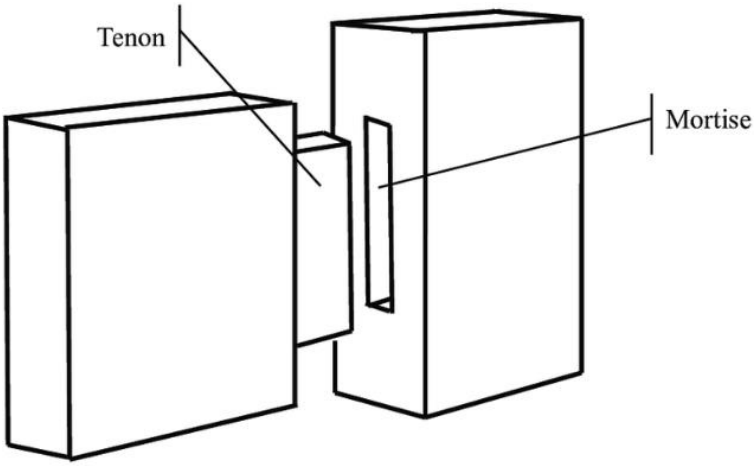

b) Cut the mortise first by drilling series of holes within the layout line, chiseling out the waste stock and trimming the corners and sides.
c) Prepare the tenon by cutting and chiseling.
d) Check the tenon size against the mortise that has been prepared and adjust it if necessary.

- In **lap joints**, an equal amount of wood is removed from each piece. Lap joints are easy to layout, using a try square and a marking gauge. Follow the procedure suggested for sawing and removing the waste stock. If the joint is found to be too tight, it is better to reduce the width of the mating piece, instead of trimming the shoulder of the joint. This type of joint is used for small boxes to large pieces of furniture.

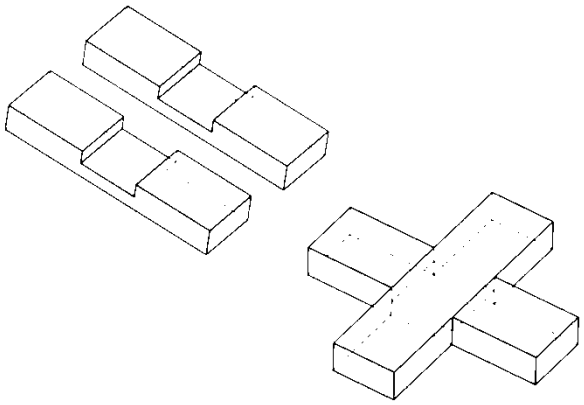

- A **dovetail joint** or simply **dovetail** is a joinery technique most commonly used in woodworking joinery (carpentry), including furniture, cabinets, log buildings, and traditional timber framing. Noted for its resistance to being pulled apart, also known as tensile strength, the dovetail joint is commonly used to join the sides of a drawer to the front. A series of pins cut to extend from the end of one board interlock with a series of 'tails' cut into the end of another board. The pins and tails have a trapezoidal shape. Once glued, a wooden dovetail joint requires no mechanical fasteners.

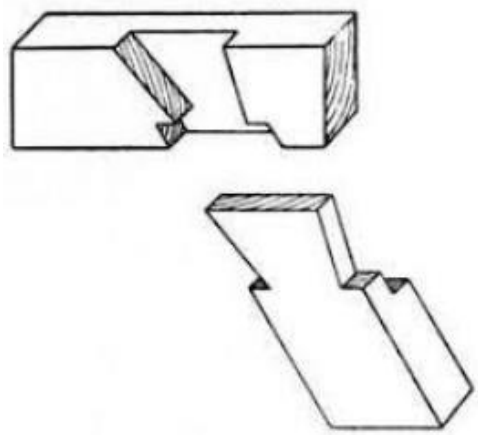

- **Bridle joint:** This is the reverse of mortise and tenon joint in form. The marking•]out of the joint is the same as for mortise and tenon joint. This joint is used where the members are of square or near square section and unsuitable for mortise and tenon joint.

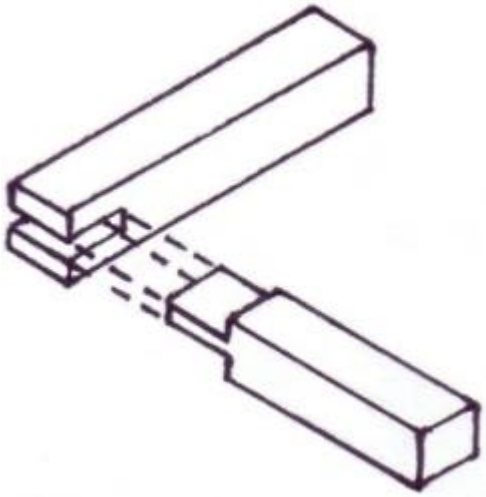

- In a cross-lap joint, the woodworker removes half the material from both boards just like a half-lap joint. Essentially, it's a half-lap joint that occurs in the middle of one or two of the boards, rather than at the ends.

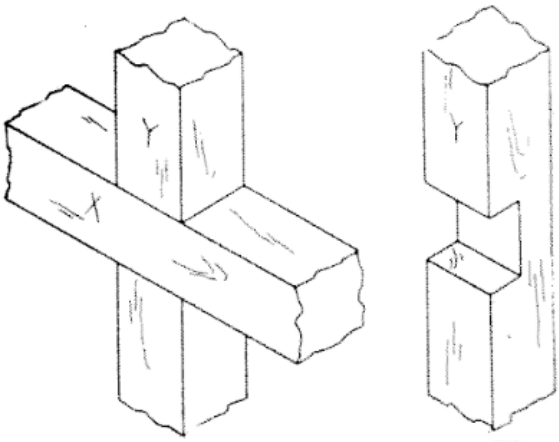

- **A dowel joint** is commonly used to reinforce butt joints, that is, the joining of the end or edge of a board to the face of another. It is made up of 2 pieces with holes drilled; into which glue and small round wooden pins (known as dowels) are inserted connect them.

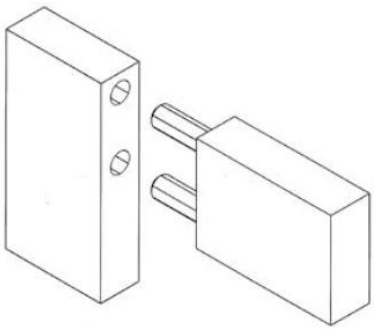

<u>Wood Working Machines</u> (Band saw machine, Circular saw machine, Jointer or Hand planer or surface planer machine, Thickness planer machine, Wood turning lathe machine)

- A **Band saw machine** is a power saw with a long, sharp blade consisting of a continuous band of toothed metal stretched between two or more wheels to cut material. They are used principally in woodworking, metalworking, and lumbering, but may cut a variety of materials. Advantages include uniform cutting action as a result of an evenly distributed tooth load, and the ability to cut irregular or curved shapes like a jigsaw. The minimum radius of a curve is determined by the width of the band and its kerf. Most bandsaws have two wheels rotating in the same plane, one of which is powered, although some may have three or four to distribute the

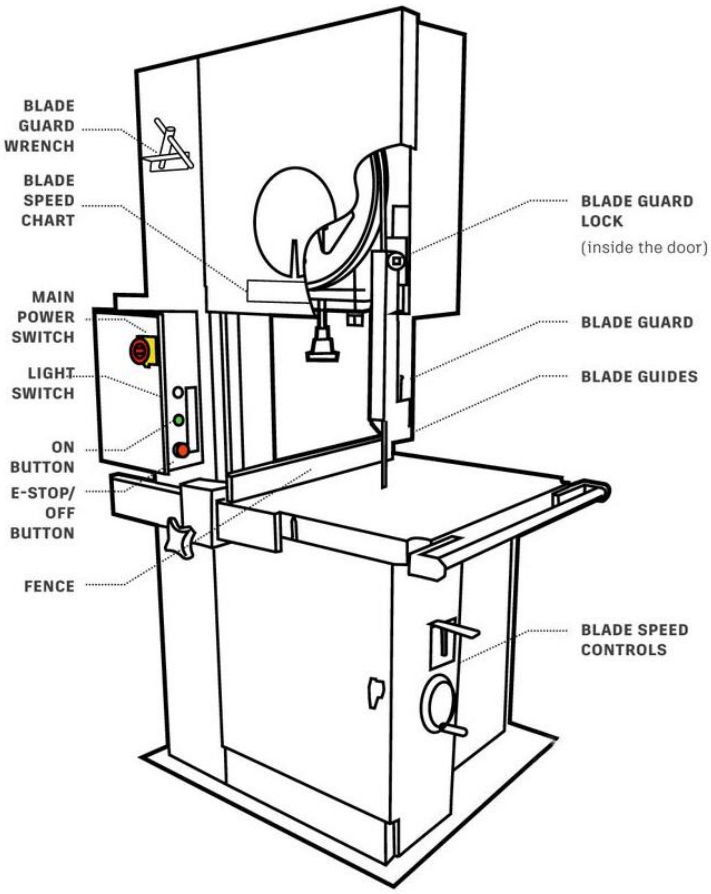

load. The blade itself can come in a variety of sizes and tooth pitches (teeth per inch, or TPI), which enables the machine to be highly versatile and able to cut a wide variety of materials including wood and plastic.

- A **circular saw** is a power-saw using a toothed or abrasive disc or blade to cut different materials using a rotary motion spinning around an arbor. A hole saw and ring saw also use a rotary motion but are different from a circular saw. Circular saws may also be loosely used for the blade itself. Circular saws were invented in the late 18th century and were in common use in sawmills in the United States by the middle of the 19th century.

A circular saw is a tool for cutting many materials such as wood, masonry, plastic, or metal and may be hand-held or mounted to a machine. In woodworking the term "circular saw" refers specifically to the hand-held type and the table saw and chop saw are other common forms of circular saws. Circular saw blades are specially designed for each particular material they are intended to cut and in cutting wood are specifically designed for making rip-cuts, cross-cuts, or a combination of both.

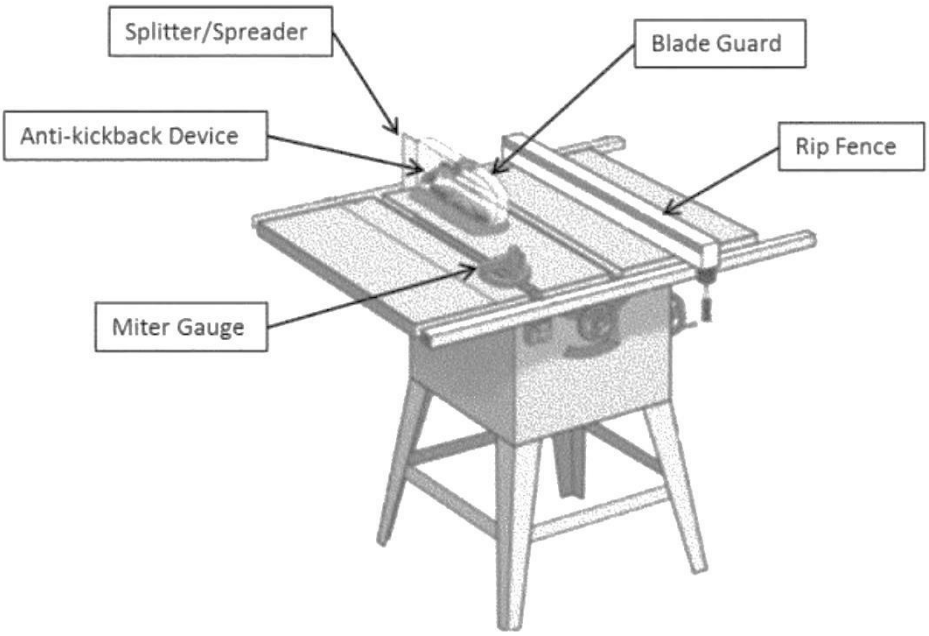

Circular saw

- **The Surface Planer** (sometimes known as a 'Jointer') is used for planing one side and one face of solid timber straight and square to each other. It is an essential machine for all woodworking projects as the accuracy of your pieces depend on the squareness of your face edge and face side which is produced using this machine. The machine is hand-fed by a single operator and comes in a range of sizes to cater for all workshop needs. The surface planer can also be used for bevelling and chamfering with the help of additional jigs.

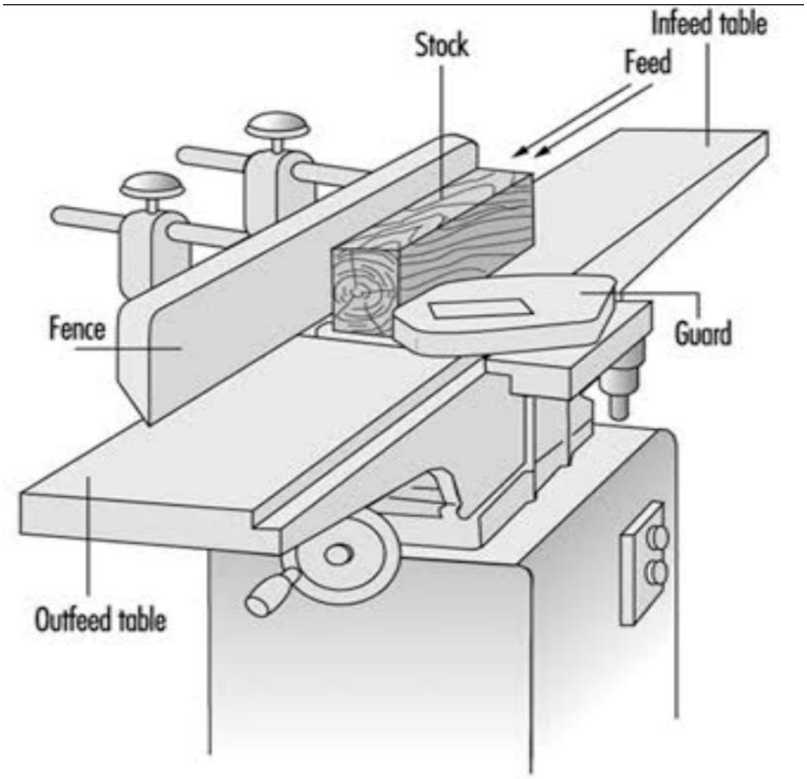

Jointer or Hand planer or surface planer machine

- A **thickness planer** is a woodworking machine to trim boards to a consistent thickness throughout their length. This machine transcribes the desired thickness using the downside as a reference / index. So, to produce a completely straight planed board requires that the down surface is straight before planing. Obtaining the first flat side requires either face planing with a jointer or face planing using a planer and jointer sled. It is different from a surface planer, or jointer, where the cutter head is set into the bed surface. A surface planer has slight advantages for producing the first flat surface and may be able to do so in a single pass. However the thicknesser has more important advantages in that it can produce a board with a consistent thickness, avoids producing a tapered board, and by making passes on each side and turning the board, may also be used for the initial preparation of an unplaned board.

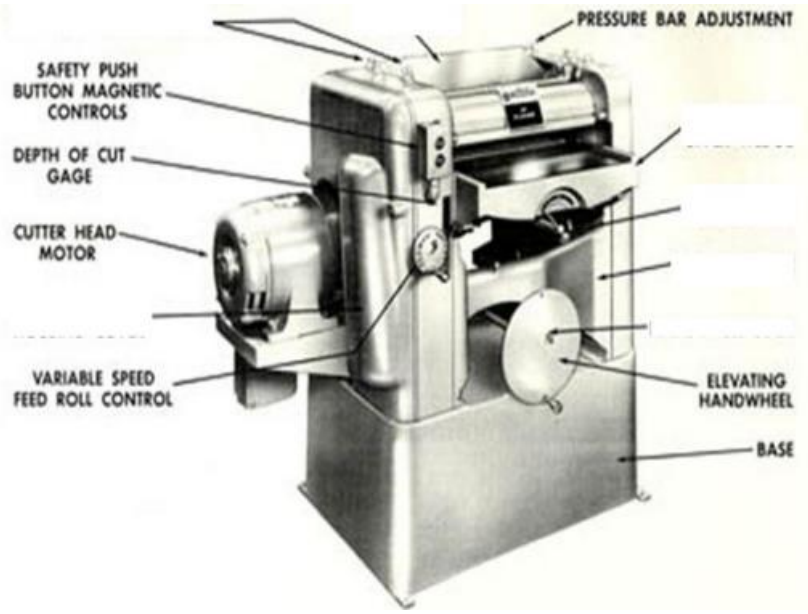

- **Wood turning lathes** are typically used to shape wood into cylindrical profiles. Objects made on a wood lathe include such items as furniture legs, lamp posts,

baseball bats, bowls and other ornamental forms. Wood lathe tooling consists of fixturing and securing devices for the work piece, a moveable tool rest, and hand-held cutting tools in the form of long handled gouges, skews, scrapers, and parting tools. Specialty tooling is also available for internal shaping and surface development. Although wood lathes can take many forms depending on the primary turning operation, those on campus include the driven or rotating headstock, lathe bed, tailstock for longer objects, and an adjustable tool rest.

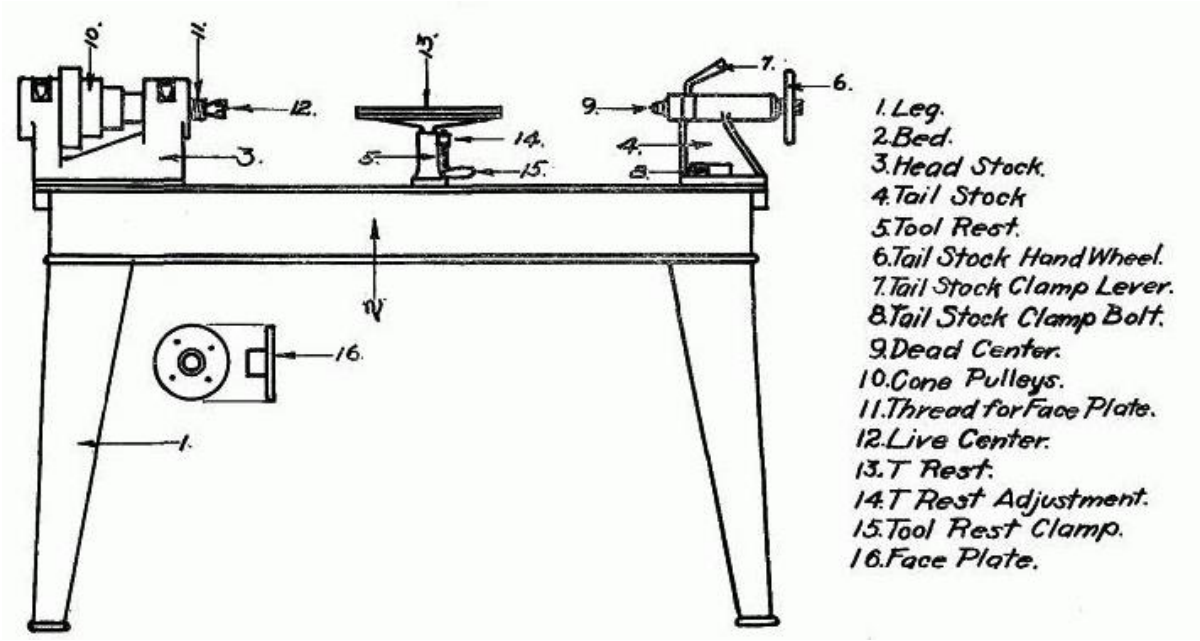

Wood turning lathe machine

<u>SECOND CLASS</u>

Aim of Job:

Job drawing:

Tools Used:

Operations involved:

Procedure:

FITTING SHOP

FIRST CLASS

Definition/Introduction:

Fitting Shop involves a large number of hand operations to finish the work to desired shape, size and accuracy. Fitting is working a part to make it fit its mating part in a joint. This mating part should be completely finished. The various operations performed are marking, chipping, sawing, filing, scraping, drilling, tap (Internal threading) and die (External threading).

Safety precautions in Fitting Shop:

- Do not use a file without a handle.
- Do not use punches and hammer with mushroom head.
- Do not use hammer with a loose head.
- Keep your hands away from moving parts.
- Ensure that the work piece is clamped in the vice firmly and securely.
- Keep the hand tools and vice clean
- Always use a brush to remove any chips.
- Always roll up your sleeves (or) wear short sleeves.
- Tuck in your shirts before starting any operation.
- Remove wristwatches, rings, bracelets, bangles etc., since they can lead to injuries.
- Wear always safety shoes.

Common Operations in Fitting Shop:

Fitting:

The term **'bench work'** refers to the production of components by hand on the bench, whereas **fitting** deals which the assembly of mating parts, through removal of metal, to obtain the required fit.

Filing:

Filing is one of the methods of removing small amounts of material from the surface of a metal part. A file is a hardened steel tool, having slant parallel rows of cutting edges or teeth on its surfaces. On the faces the teeth are usually diagonal to the edge. One end of the file is shaped to fit into a wooden handle.

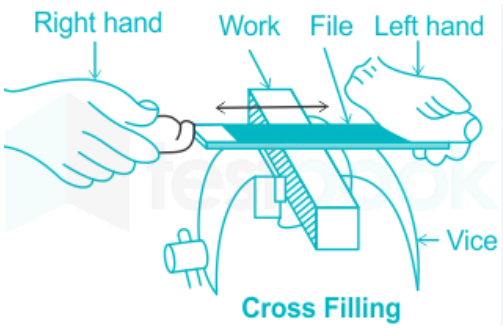

There are several methods of filing, each with a specific purpose.

Holding the file: For heavy work and to remove more metal, a high pressure is used. For light and fine work, a light pressure is applied.

Filing internal curves: A part of half round file only makes contact as shown during filing operation. Movement of the file is indicated by arrows.

Cross filing: It is the most common method of filing. Cross filing is carried out across two diagonals, to produce medium surface finish. It is used when large

amounts of metal are to be removed. By cross filing ‘rounding’ the surface is reduced.

Straight filing: When a short length of workpiece is required to have a flat surface, straight filing is used. File marks made during cross filing may be removed, to produce a relatively smooth surface.

Draw filing: It is done to get a finely finished surface. It produces a smoother surface finish than straight filing. A smooth or dead smooth flat file is used for this.

Grinding:

The operator guides the grinding wheel over the surface of the workpiece, applying pressure as necessary. The rotating wheel grinds away the unwanted material, producing the desired shape, dimension, or surface finish. The operator may move the grinding wheel in a linear or circular motion, depending on the specific requirements of the task.

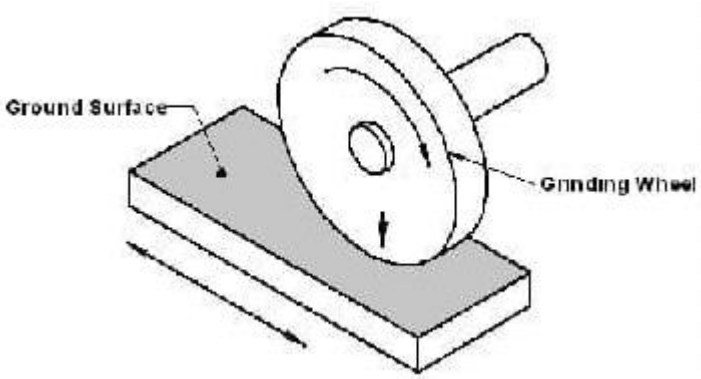

Chipping:

Removing the metal with a chisel is called chipping and is normally used where machining is not possible. While chipping, safety goggles must be put on to protect eyes from the flying chips. To ensure safety of others, a chip guard is placed in position. Care should be taken to see that the chisel is free from mushroom head.

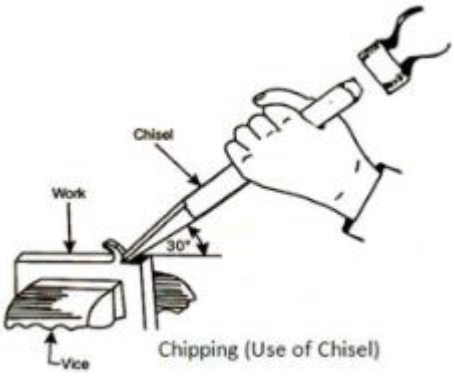

Chipping (Use of Chisel)

Sawing:

Sawing is used to separate work parts into two or more pieces, or to cut off an unwanted section of a part. These processes are often called cut-off operations and since many manufacturing projects require cut-off operations at some point in the production sequence, sawing is an important manufacturing process.

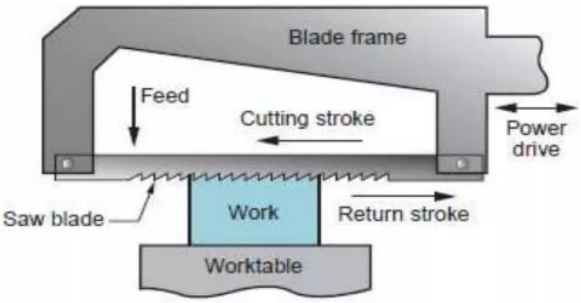

Marking:

Marking out or layout is the process of transferring a design or pattern to a work piece. This operation involves marking the work piece with lines or symbols to indicate where it needs to be cut or drilled.

Drilling:

A cutting process that involves spinning a drill bit to create a circular hole in solid materials is known as drilling. The drill bit is typically a multi-point rotary cutting tool.

The bit is pressed against the workpiece and rotated at speeds between several hundred and several thousand revolutions per minute.

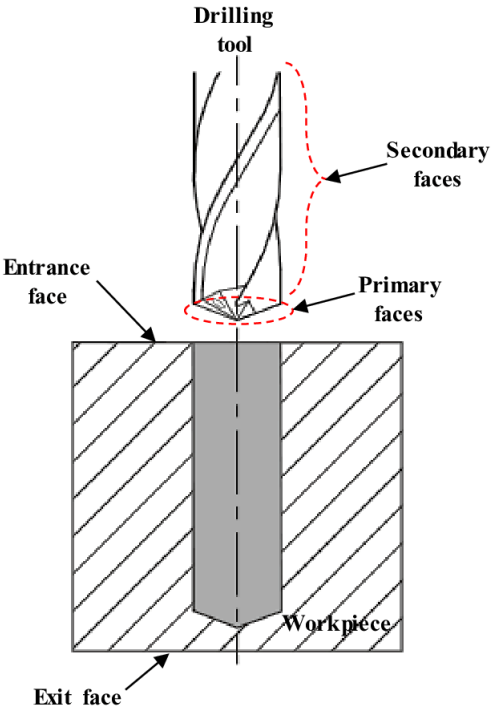

Reaming:

Reaming is **a cutting operation that involves enlarging existing hole diameters more accurately and enhancing the surface finish of the hole's walls**. The reaming tool used for the reaming operation is called "Reamer." This process is a finishing operation and does not cut much material compared to boring or drilling.

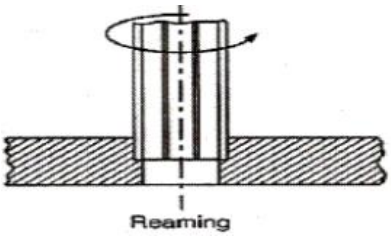

Tapping:

Tapping is the process of **cutting a thread inside a hole so that a cap screw or bolt can be threaded into the hole**. Also, it is used to make thread on nuts. Tapping can be done on the lathe by power feed or by hand.

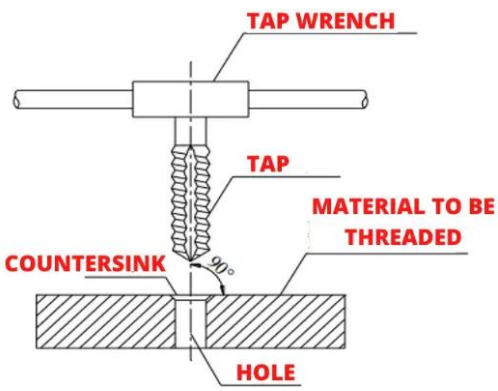

Dieing:

Dieing are cutting tools used for making external threads. Dieing are made either solid or split type. They are fixed in a die holder for holding and adjusting the die gap. They are made of tool steel or high carbon steel.

Tools Used in Fitting Shop with Diagrams

Clamping tools (Bench Vice, Hand Vice, Leg Vice, Pin Vice, Pipe Vice, Tool Maker's vice)

(1) Bench Vice:

In various woodworkings, metal working, and other applications, Bench vice is used to hold a workpiece stationary. Workbench vice allow you to perform various operations like sawing and drilling when it is attached to a workbench to hold a workpiece. It is a versatile tool and it allows you to perform various operations.

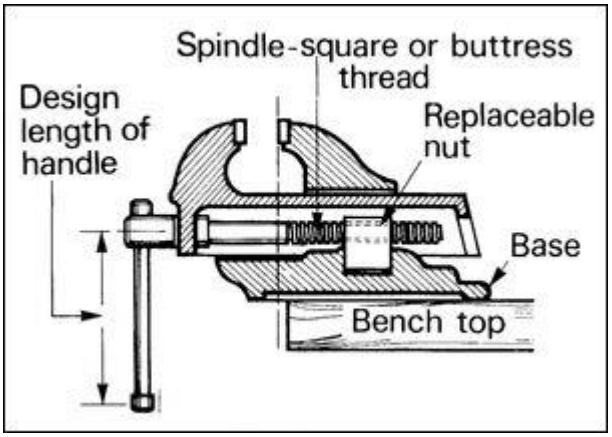

Hand Vice:

A hand-held vice is a tool used for clamping small objects while they are worked upon. Being a hand-held tool, it is portable and can be used anywhere, including in the home, workshop or outdoors. It is much lighter and gentler on workpieces than other vices, as it is of a much smaller size. This means it may be used for holding workpieces that are too small or delicate to be held in metalworking or woodworking vices. A hand-held vice is a light duty vice that will not mar a material's surface when clamped, and so it can hold a variety of different materials, including metal, plastic and wood.

Leg Vice:

The leg vice is an older form of vice which is used for heavy work. It has made out of mild steel with cast steel jaws. It has a long leg that touches the ground.

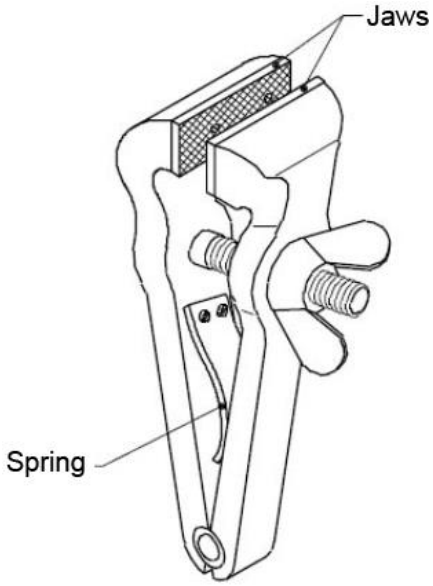

Hand Vice

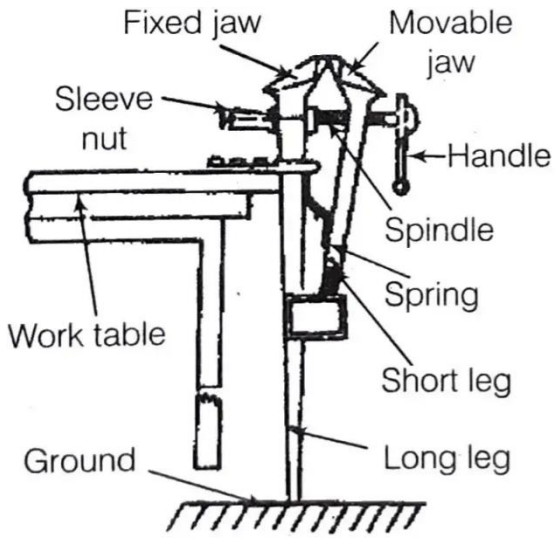

Leg Vice

(4) Pin Vice:

It is used by watchmakers to hold small wire or pin for repairing the watch. It consists of a handle and a chuck; chuck knurling is provided for gripe. Inside the chuck three jaws are provided for gripe the small wire or pin. When chuck is rotated clockwise three jaws comes forward and gripe the wire or pin from all side firmly. When chuck is rotated anti-clockwise direction three jaws go back away from each other and leave the wire or pin from the jaws of pin vice.

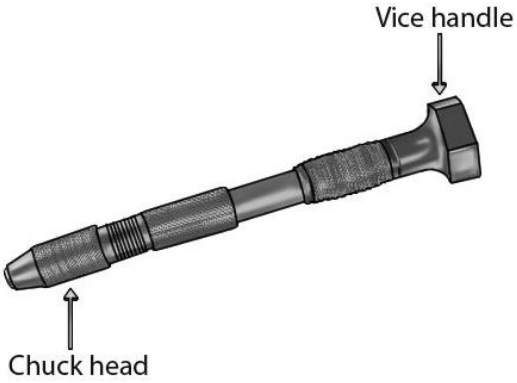

(5) Pipe Vice:

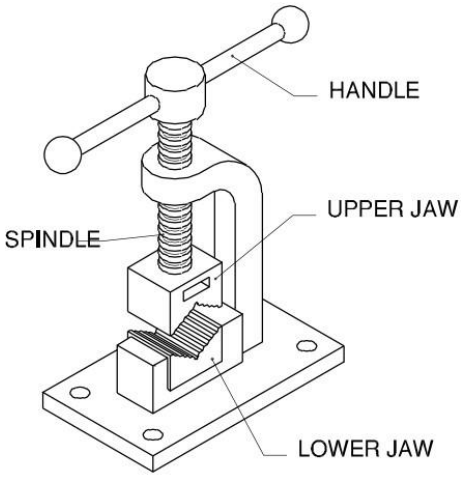

A pipe vice is a plumbing tool used to hold pipe or tubing securely so that it can be cut or threaded. Pipe vices are also useful for pipe welding. It is generally used in plumbing work. The main body of the pipe vice is made of cast iron. It is consisting of two jaws; one is fixed and the other is movable. In a manufacturing environment, a pipe vice is a critical piece of apparatus in the assembly of pipeline components.

(6) Tool Maker's vice:

A clamp is a fastening device used to securely hold objects together, to avoid any movement or separation. Toolmaker's clamps are designed to hold work together during drilling, tapping and other machining operations. They are different from regular clamps in that they are smaller, stronger and used for precision clamping. They are known as 'toolmaker's clamps' because they are often used by toolmakers when machining or clamping small components. They are also known as 'parallel clamps' due to the parallel jaws, and sometimes 'machinist's clamps' because they are used for a variety of machining operations.

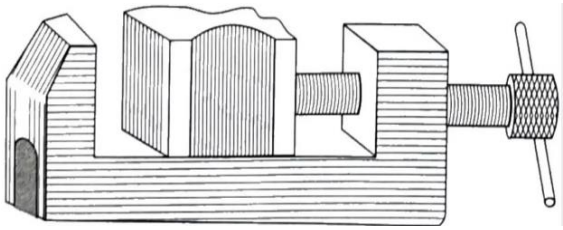

Measuring & Marking Tools:

Try-square: It is used for marking and testing the squareness and straightness of planed surfaces. It consists of a steel blade, fitted in a cast iron stock. It is also used for checking the planed surfaces for flatness. Its size varies from 150 to 300 mm, according to the length of the blade. It is less accurate when compared to the try-square used in the fitting shop.

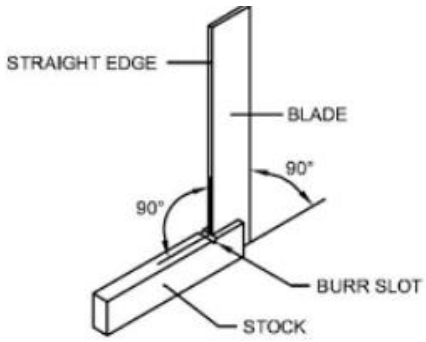

Bevel Protractor:

It is used for laying-out and checking angles. The blade of the bevel is adjustable and may be held in place by a thumb screw. After it is set to the desired angle, it can

be used in much the same way as a try-square. A good way to set it to the required angle is to mark the angle on a surface and then adjust the blade to fit the angle.

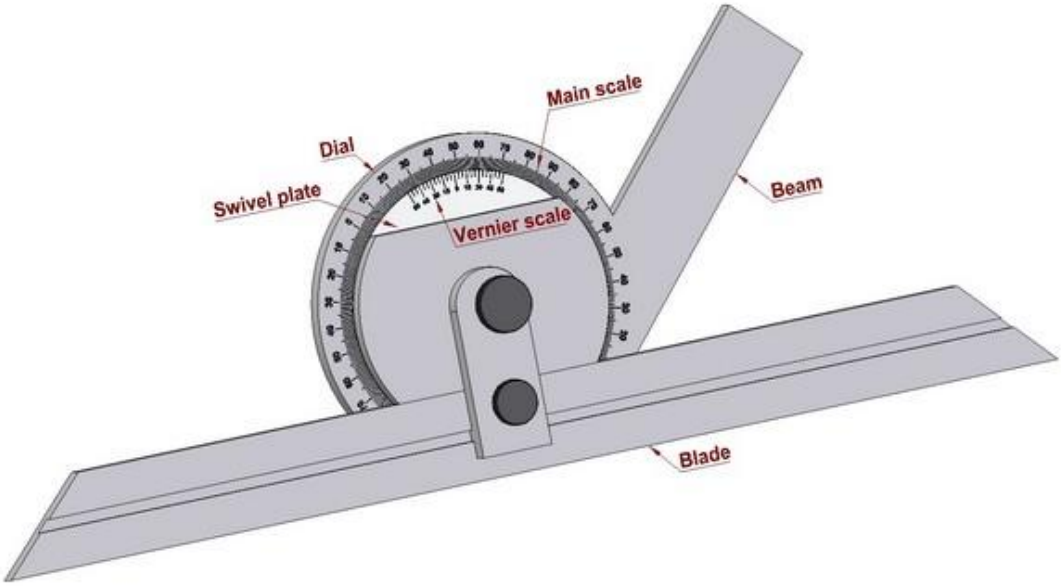

Combination set:

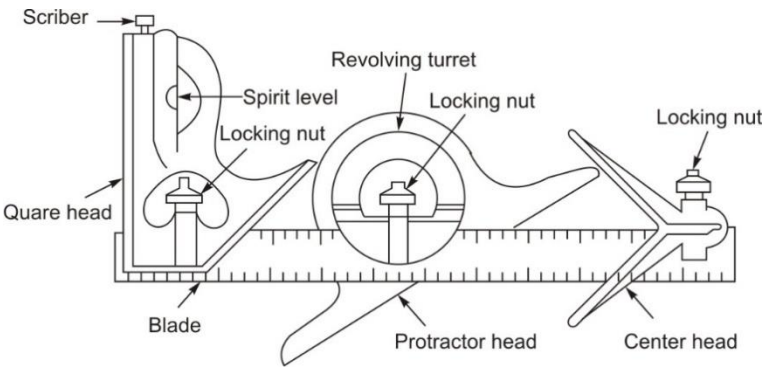

A combination set is a versatile measuring tool used in woodworking, metalworking and construction. It typically includes a Graduate Rule, a Square, and a Protractor Head, sometimes with additional components like a centre head and depth gauge. The combination set has three parts i.e., Square Head, **Protractor** Head, and centre Head. It is used for both Marking and measuring. It is generally made up of alloy steel. It consists of a heavy scale, which is grooved all along its length.

Key Components of a Combination Set

- **Rule:** Provides linear measurements in inches or millimeters.
- **Square head:** Used for checking and creating right angles.
- **Protractor head:** Measures angles.
- **Center head:** Finds the center of round objects (optional).
- **Depth gauge:** Measures depth (optional).

Centre Square:

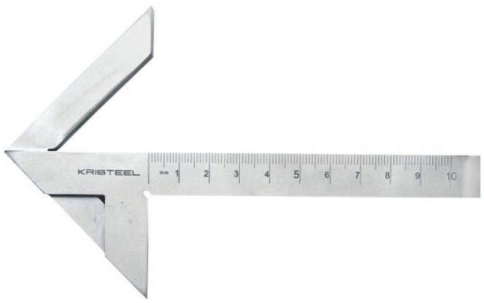

Centre square **finds and marks the exact centre of round, square and octagonal parts.** Heavy beam and angle cut knife edged blades. Place on the end of round bar and scribe lines to determine centre.

A tool used to find the center of a circle, consisting of two perpendicular straight-edges, both placed tangent to the circular piece, and a third straight-edge which bisects the angle between the other two.

Scriber:

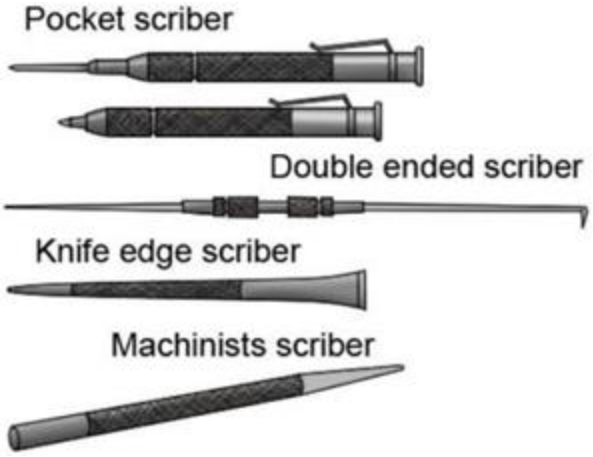

A scriber is a hand tool used in metal work to mark lines on workpieces, prior to machining. The process of using a scriber is called scribing and is just part of the process of marking out. It is used instead of pencils or ink lines, because the latter are hard to see, easily erased, and imprecise due to their wide mark; scribe lines are thin and semi-permanent.

Surface Plate:

A surface plate is a solid, flat plate used as the main horizontal reference plane for precision inspection, marking out (layout), and tooling setup. The surface plate is often used as the baseline for all measurements to a workpiece.

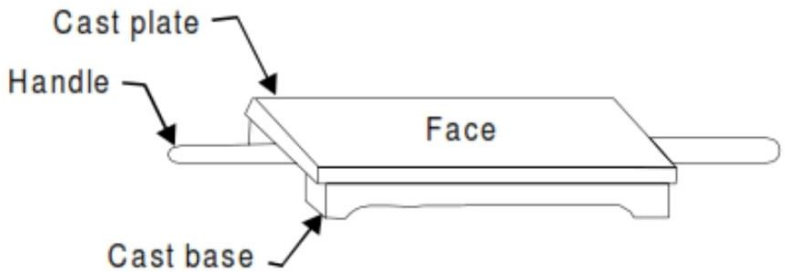

Surface plate diagram

Dot Punch:

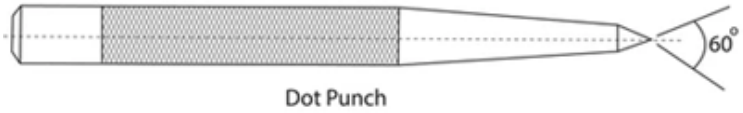

The dot punch is similar to a center punch but typically thinner, lighter, and having a sharper tip, used for marking the center of a hole that is to be drilled, or (more generally) for making an indentation in the surface of an object. However, it is more accurate as the dot produced is smaller.

Both the center and dot punches are used in the same way. A ball pein hammer is used to tap the head of the punch and this delivers enough force to the point of the punch to put a small indentation into the surface of the material.

Centre Punch:

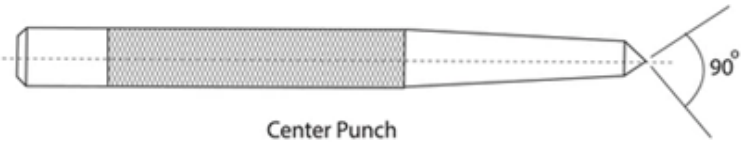

A center punch is used to mark the center of a point. It is usually used to mark the center of a hole when drilling holes. A drill has the tendency to “wander” if it does not start in a recess. A center punch forms a large enough dimple to “guide” the tip of the drill. The tip of a center punch has an angle between 60 and 90 degrees. When drilling larger holes, where the drill bit is wider than the

indentation produced by a center punch, the drilling of a pilot hole is usually needed. An automatic center punch operates without the need for a hammer. An **automatic center punch** is a hand tool used to produce a dimple in a workpiece (for example, a piece of metal). It performs the same function as an ordinary center punch but without the need for a hammer.

When pressed against the workpiece, it stores energy in the spring, eventually releasing it as an impulse that drives the punch, producing the dimple. The impulse provided to the point of the punch is quite repeatable, allowing for uniform impressions to be made.

Angle plate:

An angle plate constructed from durable cast steel is characterised by its precise 90-degree geometry with two meticulously machined surfaces. These essential tools serve a vital role in the world of machining and metalworking, offering a dependable means of securing workpieces that may prove challenging to hold using conventional methods like machine vices.

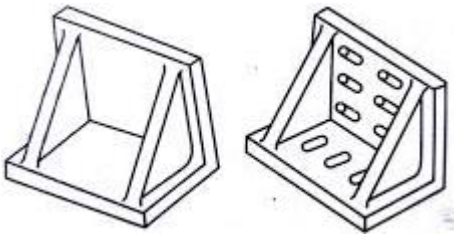

V- Block:

A vee block (or V-block) is a square or rectangular precision-made block used to securely hold a cylindrical workpiece on a milling machine or drill press. They are called vee blocks because they have at least one centrally located V-shaped groove upon which parts are positioned. The groove is parallel to both the sides and base of the block so that parts are correctly centered and ready to be machined. Vee blocks can be used to hold work either horizontally or vertically.

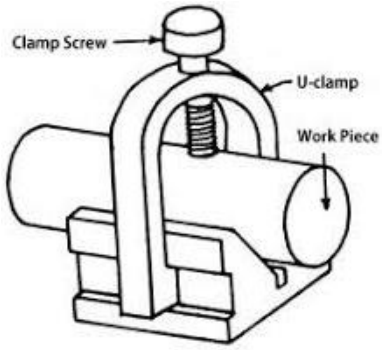

Slide Rule:

A device for performing mathematical calculations, consisting essentially of a ruler having a sliding piece moving along it, both marked with graduated, usually logarithmic, scales: now largely replaced by the electronic calculator.

Vernier Caliper:

Vernier calipers are instruments that are used to calculate precise linear measurements. It determines the single straight distance between two points. It might be anything as simple as a barometer with points heading inside or outward. The tips of the caliper are first calibrated to fit across the spots to be recorded, then the caliper is removed and the space between the ends is measured with a ruler. By positioning the caliper's jaws on every side of the circumference, a vernier caliper may be used

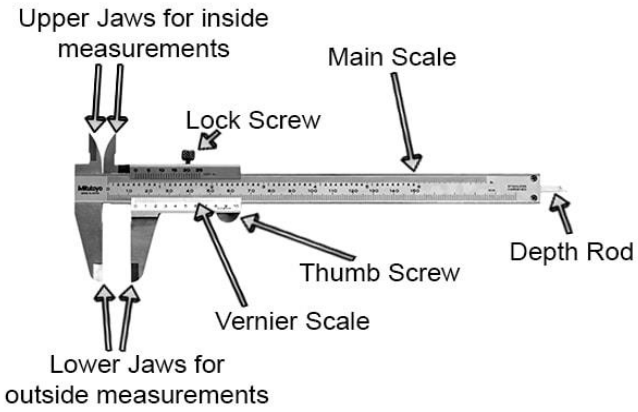

to estimate the diameter of a round and cylindrical object. It is an essential tool to keep in your toolbox. Vernier caliper normally display metric or imperial measurements, while some do both.

Vernier calipers consist of the main scale with a jaw at one end. The vernier scale is housed in another jaw that slips over the main scale. The zeros of the scale bar and the Vernier scale must line up when the two jaws meet each other. If consecutive zeros do not coincide, it will result in a positive or a negative zero error.

Micrometer:

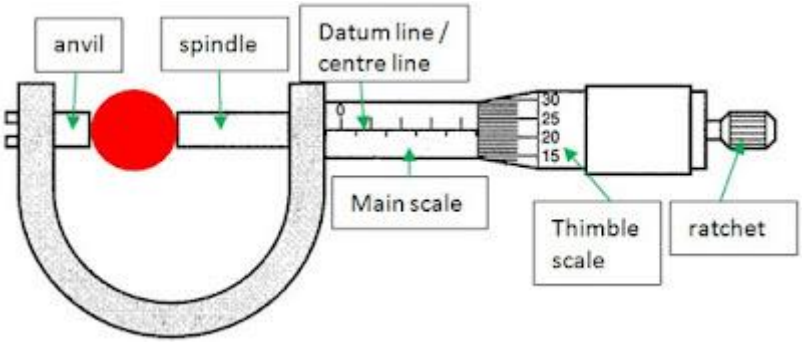

A micrometer is a helpful tool for enlarging accuracy and precision measurements. For measuring in a micrometer, an exact screw and nut are used. Micrometers are utilized for the majority of engineering precision work because of their high accuracy (approximately 0.01 mm). The word 'micrometer' typically refers to outside micrometers. Various other types of micrometers are also available depending on the measurement needs. Inside micrometers, bore micrometers, tube micrometers, and depth micrometers are a few examples. Depending on the size of the frame, the measurable range varies every 25 mm, such as 0 to 25 mm and 25 to 50 mm, so selecting a micrometer that fits the target is essential.

The versatility, reliability, and ability to measure objects at a sub-millimeter level of micrometers make them an invaluable addition to several industries and scientific disciplines.

Dial Indicator:

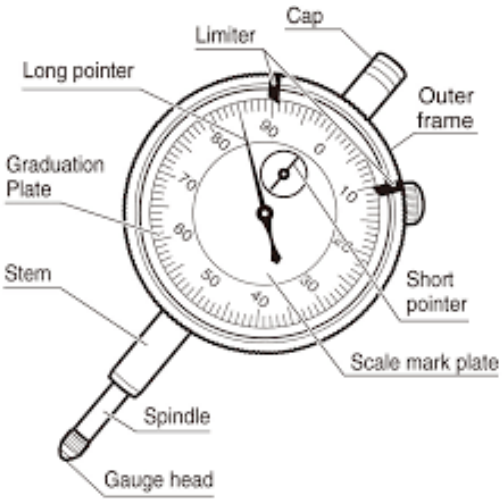

A dial gauge, also known as a dial gauge indicator, is a precision instrument employing numerical indicators and an internal mechanism to measure various components or objects accurately. A dial gauge is used to measure small linear displacements or dimensional variations with high precision and accuracy. Particularly prominent in the mechanical field, dial gauges play a crucial role in production, fabrication, and quality control departments.

These sensitive testing tools rely on the movement of an internal spindle mechanism to perform their measurements with exceptional precision, highlighting details that may escape the naked eye. In cases involving minute or nano-level errors, dial gauges step in where human observation falls short, offering invaluable assistance in rectifying imperfections in the production, fabrication, and assembly of components, machine tools, and devices.

Divider:

Compass and divider, are used for marking arcs and circles on the planed surfaces of the wood or metal.

Inside Caliper:

a caliper whose legs turn outward so that it can accurately measure inside dimensions, as the inside diameter of a pipe.

Divider

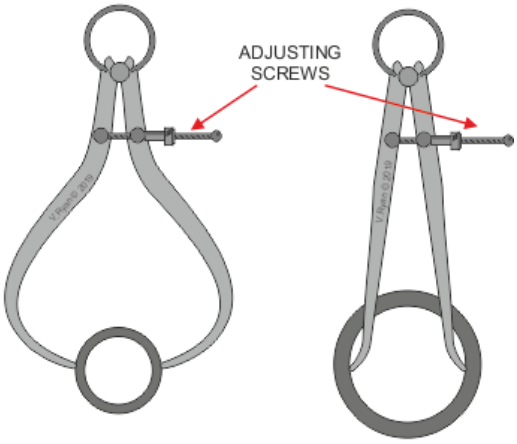

Outside Caliper **Inside Caliper**

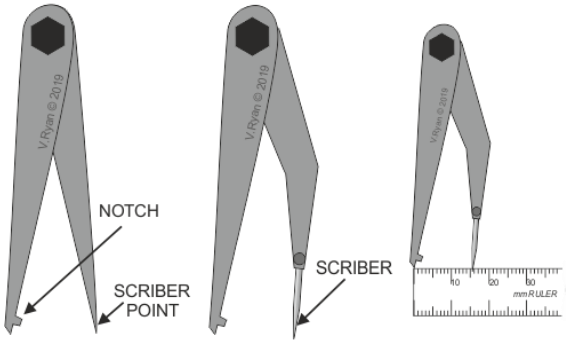

Odd- Legged Caliper

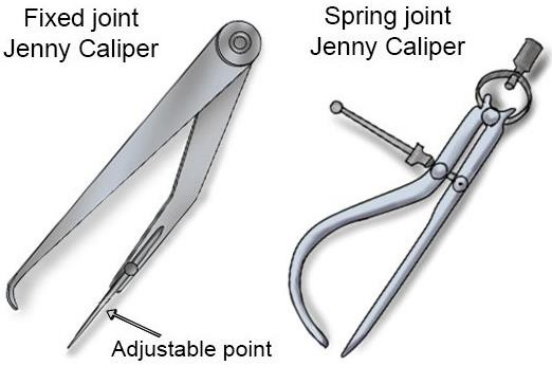

Jenny Caliper

Outside Caliper:

Outside calipers measure thicknesses and outside diameters of objects.

Odd- Legged Caliper:

An instrument consisting of two curved, hinged legs, used to measure thickness and distance. Often used in the plural as calipers.

Jenny Caliper:

Jenny callipers are used for marking lines parallel to the inside and outside edges, for finding the centre of round bars.

Surface Gauge:

A surface gauge is very useful when finding the centre of a piece of round section material. It is normally used to ‘scribe’ parallel lines. Its base is heavy and this means it is stable when in used. Surface gauges sometimes have magnetic bases and this means they can be locked onto metal surfaces making it easier to use.

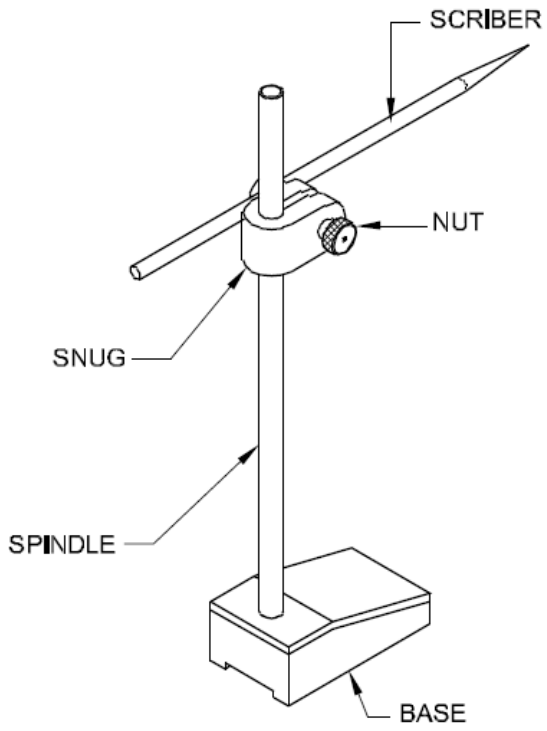

Surface Gauge

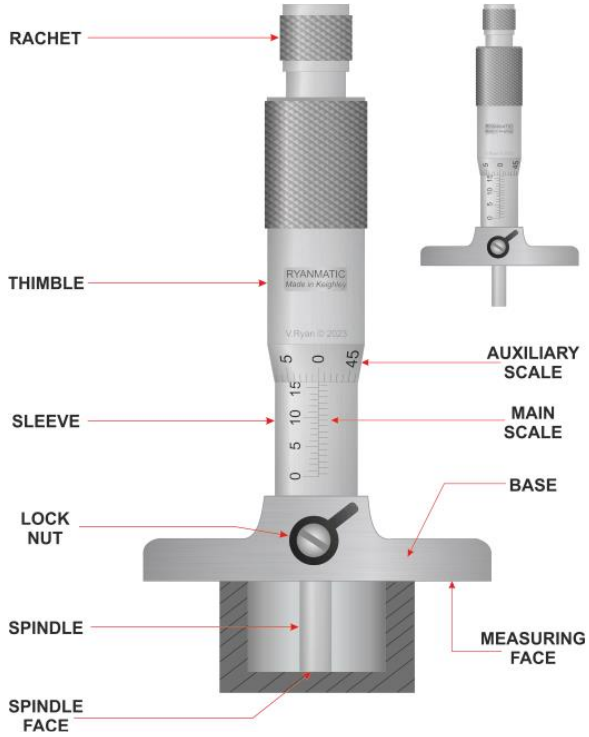

Depth gauge

Depth gauge:

Depth Gauges are measuring tools used to measure the depth of a hole, slot, or other recessed feature. It typically consists of a long, slender probe with a pointed end that is inserted into the hole or slot and a scale or display that indicates the depth measurement.

Depth Gauges are commonly used in manufacturing, engineering, and other industries where precise measurements are required. They are often used to check the depth of drilled holes, machined slots, and other features during the manufacturing process.

Some Depth Gauges are designed to be used with a micrometre or other measuring instrument to provide even greater accuracy. These gauges may have interchangeable probes or other features that allow them to be used in a variety of applications.

Feeler gauge:

A feeler gauge is a precision tool used for measuring the narrow gaps or clearances between two surfaces. This tool is constructed from a set of thin metal blades, each blade possessing a distinct thickness, which is marked for reference. Typically, these blades are mounted onto a handle or frame, allowing for ease of use.

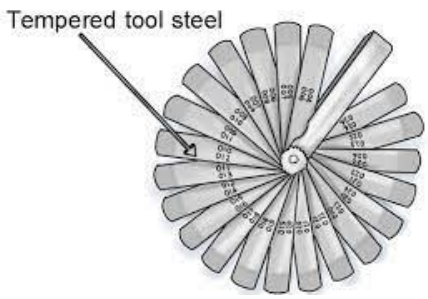

When needed, the blades can be extended or retracted, enabling the user to select the specific thickness required for a precise measurement.

Radius gauge:

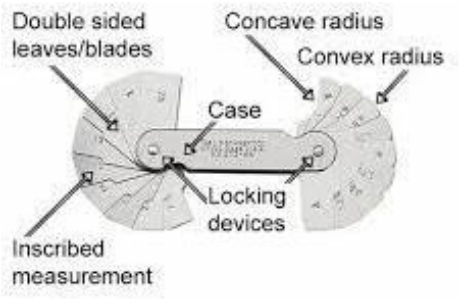

A radius gauge is a precision tool designed for the specific purpose of measuring the radius of an object, which refers to the distance from the centre of the object to its outermost edge. The process of using a radius gauge involves a few straightforward steps. First, the object to be measured is positioned under lighting to ensure a clear view of its edge. The radius gauge is then delicately placed against the object's periphery, with the tool's blades facing the source of light. By carefully observing, the blade that fits most closely and seamlessly against the object's edge provides an accurate representation of the object's radius, allowing for precise measurements in various applications.

Vernier Height Gauge:

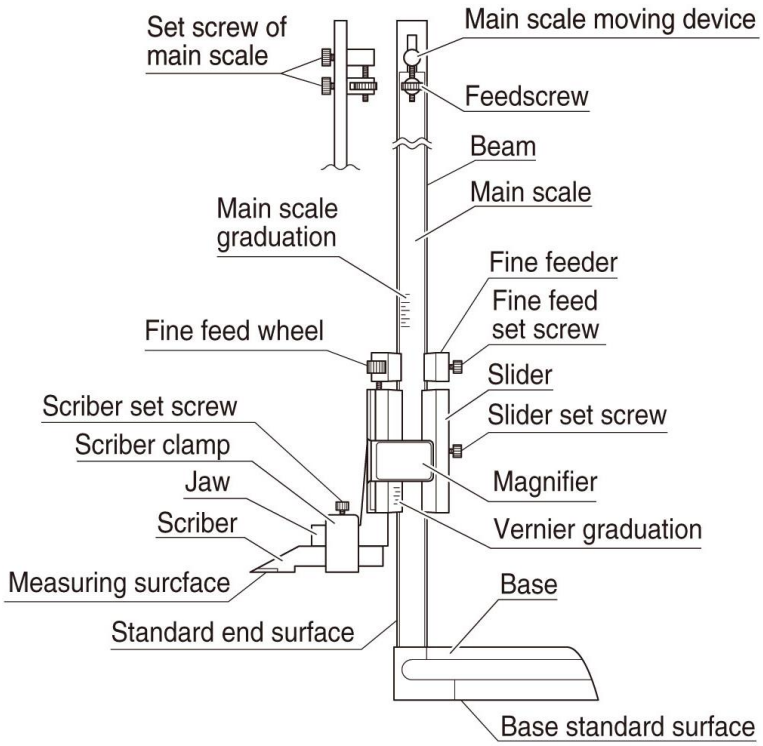

Vernier height gauge is a sort of Vernier callipers equipped with a special with a base and other attachment, which make the instrument suitable for height measurement. Along with the sliding jaw assembly arrangement is provided to carry a removable clamp. The upper and lower surfaces of the measuring jaws are parallel to the base, so that it can be used for measurements over or under surfaces. The vernier height gauge is mainly used in the inspection of parts and layout work. The vernier height gauge can be used to scribe lines at a certain distance above the surface with a scribing attachment in place of measuring jaw. Dial indicators can also be attached in the clamp and many exact measurements can be made as it exactly gives the indication when the dial tip is touching the surface. Surface plates as datum surface are used for the above measurements.

Thread Gauge:

A thread gauge, also known as a screw or pitch gauge, precisely measures the pitch or lead of screw threads. The pitch is the distance between consecutive threads, while the lead represents the distance a screw advances in one full rotation. These gauges ensure screws and threaded holes meet exact specifications. The two main

types are plug and ring gauges. Plug gauges assess internal threads by insertion, while ring gauges measure external threads by fitting over them. Both types come in GO- and NO-GO versions. GO gauges verify that threads are at least the minimum size specified, and NO-GO gauges confirm threads do not exceed the maximum specified size.

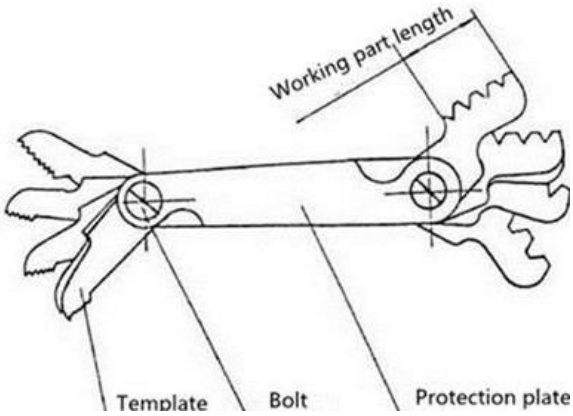

Wire Gauge:

The meaning of wire gauge is a gauge especially *for measuring the diameter of wire or the thickness of sheet metal.*

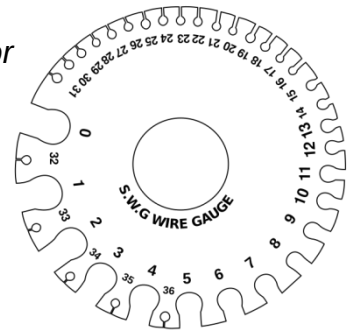

Trammel:

This is an engineering tool, used primarily *to mark out circles or arcs that are too large for a compass.*

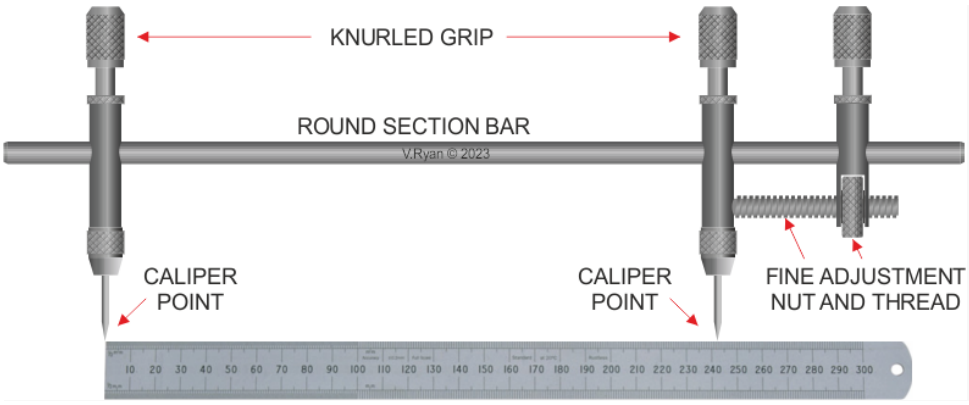

Cutting Tool:

Hacksaw:

A tool with a narrow cutting edge in a frame, used for cutting metal. A hacksaw is **a hand-powered, small-toothed saw used for cutting metal pipes, rods, brackets**, etc. Hacksaws can also cut through plastic.

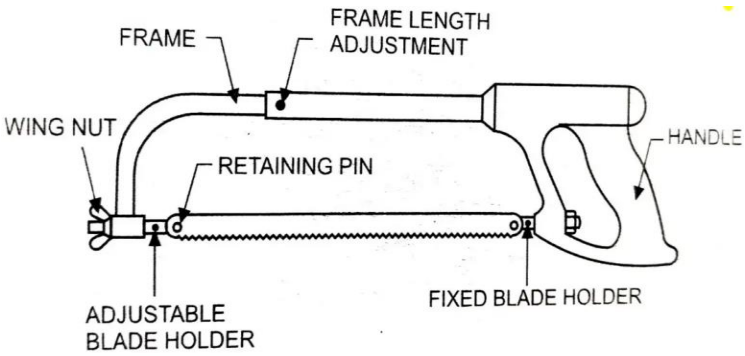

Flat Scraper:

A flat blade scraper consists of a straight flat blade with a sharpened tip end for scraping. This type of scraper can only be used on flat surfaces but is the most efficient scraper for this job.

Scraper Triangular:

The three-square scraper derives its name from its triangular shape, which includes three cutting edges. This tool is especially valuable for sharpening the edges of bush bearings and for the precise scraping of inner spherical surfaces.

Half-round scraper:

Also called 'bearing scrapers' or 'half-round scrapers', as they're used for scraping the inside of bearings and other curved surfaces to achieve a better mating surface, curved blade scrapers have two sharp edges.

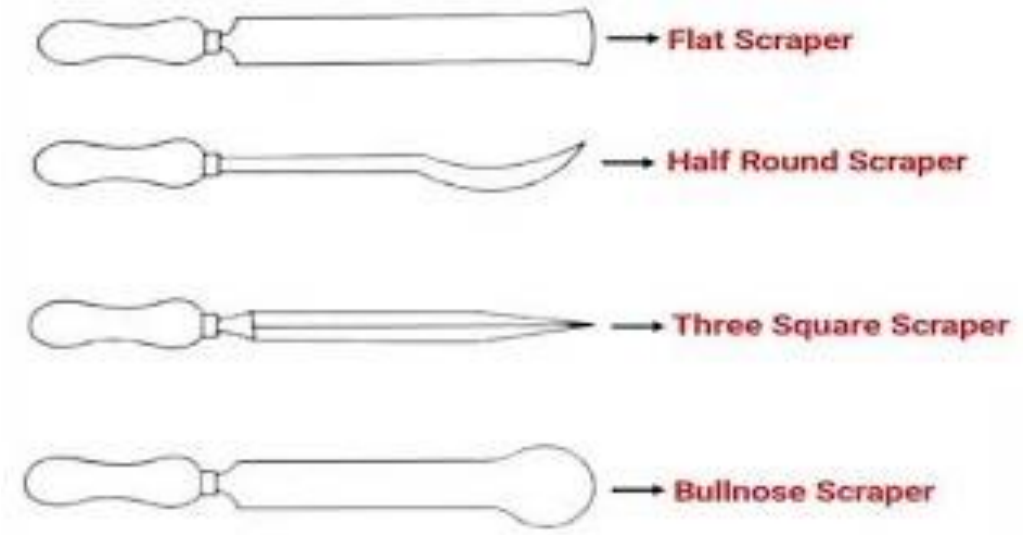

Files:

A file is a tool used in a fitting shop to remove small amounts of material from a metal part. Files are made of hardened steel and have small, parallel rows of cutting edges on their surfaces. The narrow, thin part of the file is called the tang, and it fits into a wooden handle.

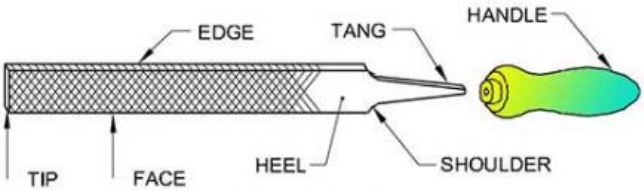

Part of a File

Files are used in many industries and trades to shape, smooth, and finish materials like metal, wood, and plastic. They are versatile tools that come in different shapes, sizes, and cuts, and can be used for a variety of applications.

Classification based on grades or spacing between teeth

Rough file:

A rough file is used for removing rapidly a larger quantity of metal. It is mostly used for trimming the rough edges of soft metal castings. A second cut file is used to give a good finish on metals.

Bastard file:

A half-round file or rasp (being a flat file on one side, and a round file on the other); typically having coarse teeth. A file of intermediate cut, neither very coarse nor very fine.

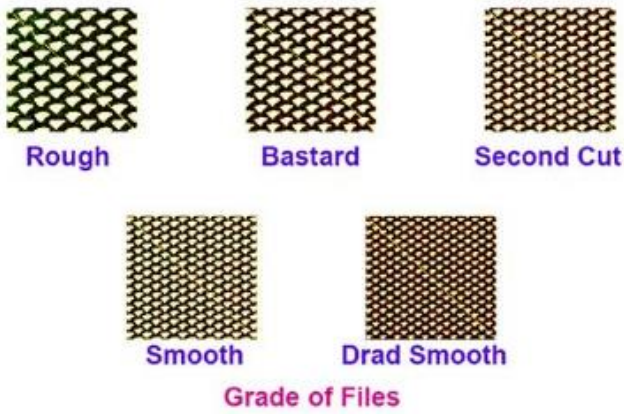

Second-Cut:

Second-cut files are of medium grade, primarily used for sizing work and achieving a plain surface.

Smooth file:

Smooth files are used to achieve a fairly smooth surface, making them suitable for work involving accuracy and precision.

Dead Smooth:

These files have closely spaced teeth that rub gently against the material to achieve a shiny finish.

Classification based on Shape and Size

Hand File:

Similar to flat files, hand files are typically used to file the inner right-angle sides of a job, and they are sometimes known as safe edge files.

Flat File:

Flat files have a rectangular cross-section, but they vary in width and thickness. They feature double-dented teeth on the face and are ideal for filing and finishing flat surfaces.

Square File:

Square files are square in shape and thin, used for filing rectangular and square grooves and keyways.

Triangular or three-square File:

Triangular files have a 60-degree angle and are commonly used to file square and rectangular works with angles ranging from 60° to 90° to complete V-slot jobs.

Round File:

Rough files have large teeth and are used for cutting soft materials, resulting in a rough finish, making them unsuitable for hard metals.

Half-round File:

Half-round files have one curved edge and are double-cut like a round file. They are used for repairing and reshaping damaged holes.

Knife-edge File:

These files resemble the edge of a knife, with thin edges typically at a 10° angle. They are used for filing small grooves and are common in the lock industry for making keys.

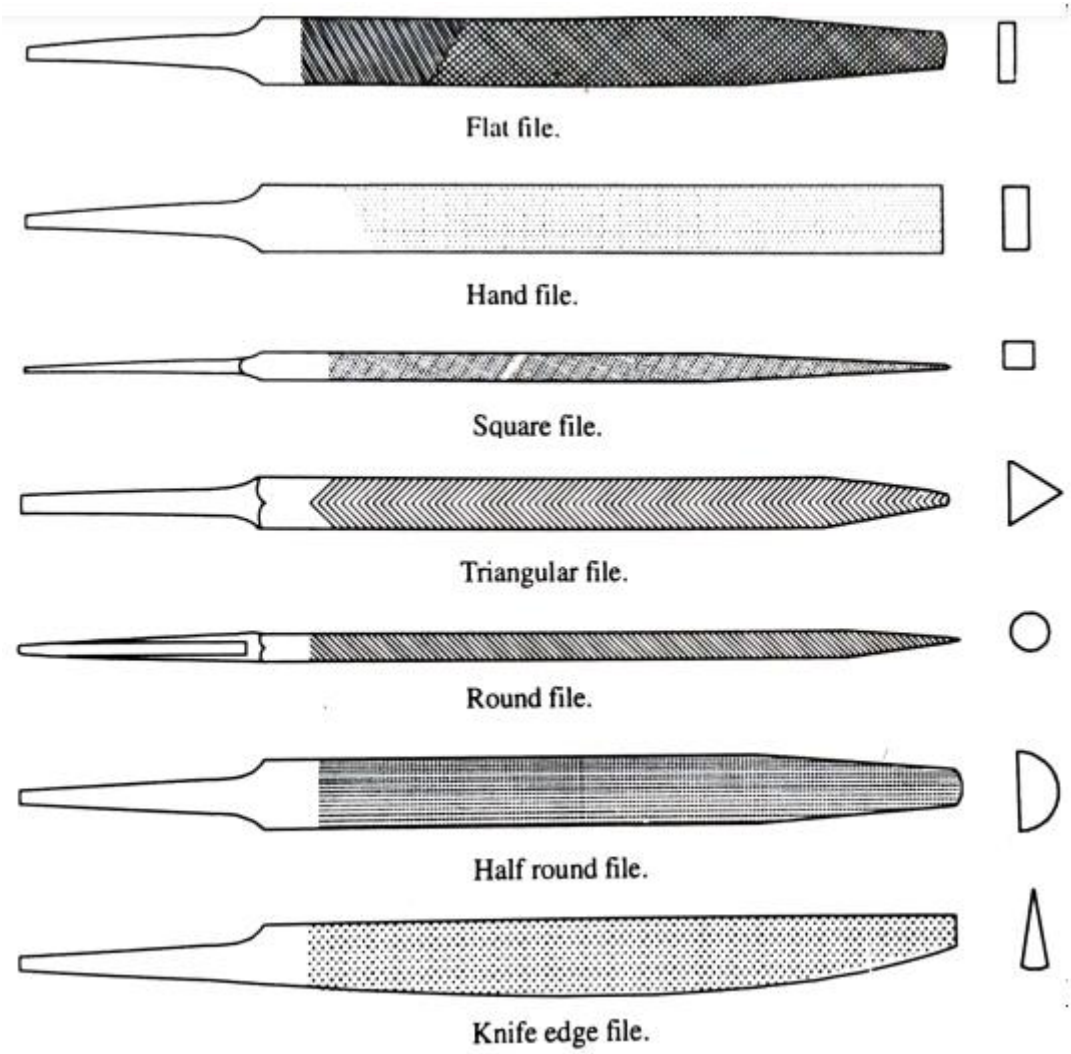

Classification based on number of Cuts

Single cut:

These files have thread-like teeth cut into round or semi-round files.

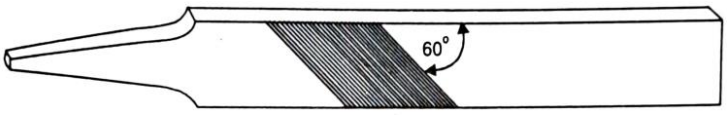

Single cut file

Double Cut:

Double-cut files have two sets of teeth crossing at angles. One set of teeth cuts quickly but doesn't smooth the surface, and the other set finishes the job.

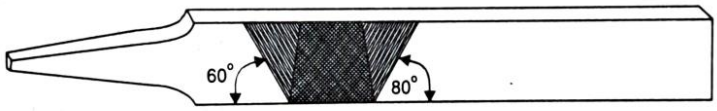

Double cut file

Chisels:

Flat or Cold Chisels:

The flat chisel, like the point and tooth chisels, is a metal hand-held tool which is struck with a metal hammer, or wooden mallet in some cases.

Cross Cut Chisels:

The cross-cut chisel is used for cutting grooves and slots. The blade narrows behind the cutting edge to provide clearance. The round nose chisel is used for cutting semi-circular grooves for oil ways in bearings

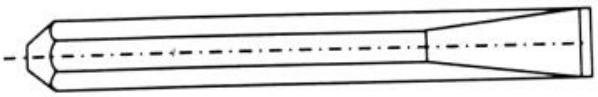

Flat chisel.

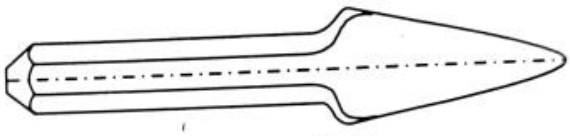

Cross-cut or cape chisel.

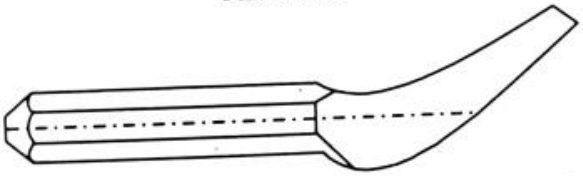

Half round chisel.

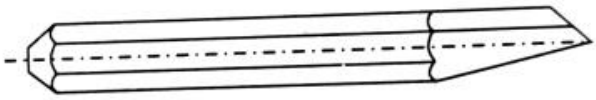

Diamond pointed chisel.

Half Round:

This is a cold chisel with a semi-circular cutting edge used for cutting round or semi-circular oil grooves in bearing, bushes and pulleys.

Diamond Points:

This is a cold chisel having a diamond-shaped cutting face for cutting V grooves or sharp internal corners.

Striking Tool:

Hammers:

Ball-Peen Hammers:

Ball-peen hammer is useful for striking punches and chiselling materials. The peening face is useful for rounding off edges of metal pins and fasteners such as rivets. It is also used for shaping, flattening or removing dents from metal sheets. Hammer head is drop forged from high grade steel.

Cross- Peen Hammers:

A cross peen hammer is a hammer with a normal striking face on one side of the head, and a dull, blade-shaped face on the other side. The blade shaped face is perpendicular to the handle- hence cross peen. A blacksmith would use this blade to stretch, thin, or crease metal.

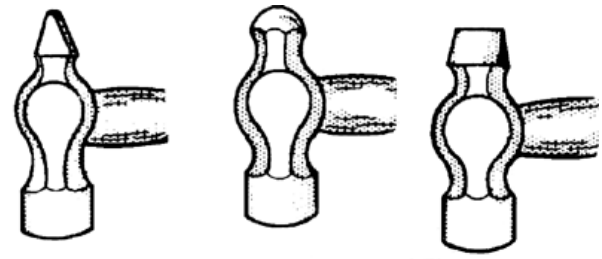

CROSS PEEN HAMMER

BALL-PEEN HAMMER

STRAIGHT PEEN HAMMER

Straight- Peen Hammers:

The **straight pein** hammer has exactly the same uses as the cross pein. However, there are times when a straight pein is suitable, because of the nature of its design.

Drilling Tool

Flat Drill:

A rotary end-cutting tool constructed from a flat piece of material provided with suitable cutting lips at the cutting end.

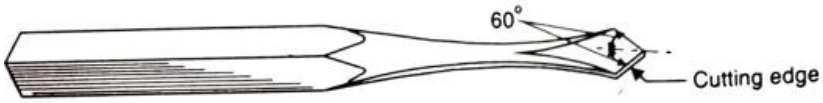

Flat drill.

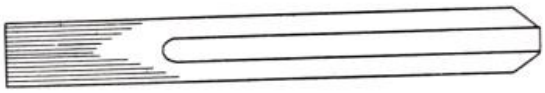

Straight fluted drill.

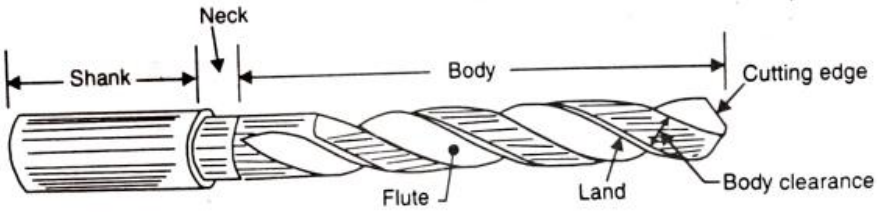

Twist drill.

Straight Fluted Drill:

A straight Flute Drill is designed to produce short chips in most drilling applications. Good for drilling soft and ductile, non-ferrous material, such as copper and aluminium. Help to prevent "digging in " or grabbing the material and to maintain proper hole diameter and sidewall surface finish.

Twist Drill:

An end cutting tool with two cutting edges and having helical flutes for admission of coolant and ejection of cutting chips, with a shank for holding and driving, this is used for originating or enlarging holes.

Reamer:

Reamer is a rotary cutting tool of cylindrical or conical shape used for enlarging and finishing to accurate dimensions holes that have been drilled, bored, or cored.

Counter Sink Drill:

A counter sink drill bit, also referred to as a screw pilot bit, is a specialized type of drill bit that is used to create a conical hole in wood that allows the head of a screw to sit flush with or slightly below the surface of the material you're working on.

Counter Bore Drill:

a tool for enlarging a drilled hole for a portion of its length, as to permit sinking a screw head. The portion of the hole so enlarged.

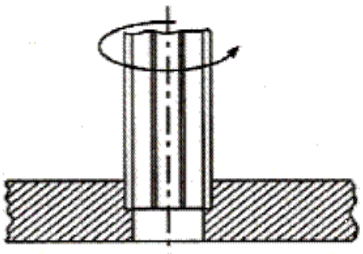

Reaming

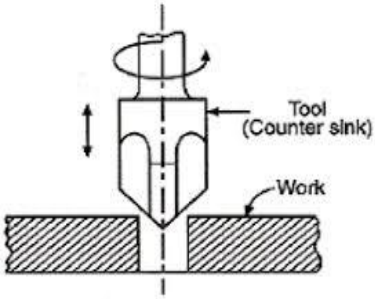

Counter sinking

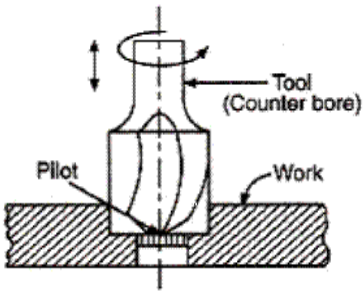

Counterboring

Threading Tools

Taps:

Tap, a screwlike tool that has threads like a bolt and two, three, or four longitudinal flutes or grooves and that is used to cut screw threads in a nut or a hole.

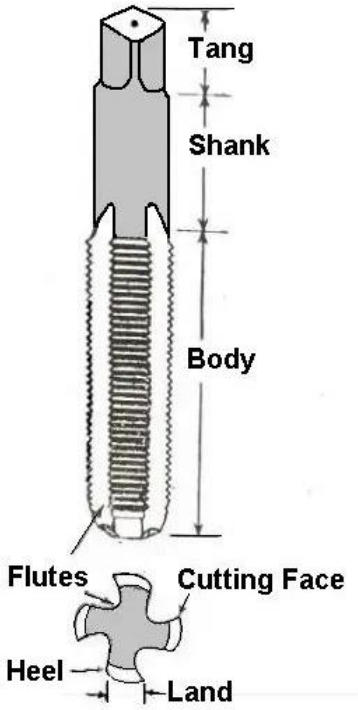

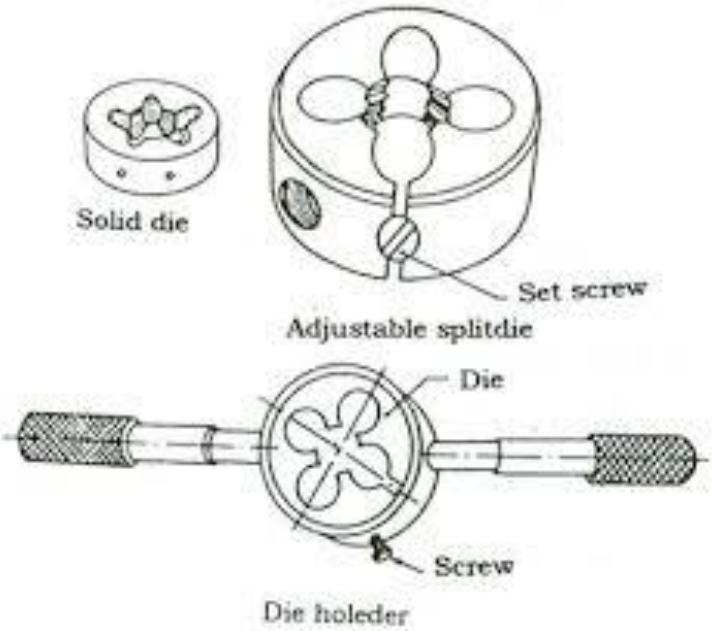

Die:

A die is a specialized machine tool used in manufacturing industries to cut and/or form material to a desired shape or profile. Stamping dies are used with a press, as opposed to drawing dies (used in the manufacture of wire) and casting dies (used in moldings) which are not.

Die Stock:

Die stocks are tools used in metalworking and machining to hold round or hexagonal dies securely in place. Dies are cutting tools used to create threads on the exterior of a cylindrical workpiece. They are an essential part of the threading process, which involves cutting helical grooves onto the surface of the workpiece to form a screw thread.

SECOND CLASS

Aim of Job

Job drawing

Tools Used

Operations involved

Procedure

MACHINE SHOP

FIRST CLASS

Definition/Introduction

A machine shop is a specialised workshop that is furnished with specialised machine tools specifically designed for shaping and modifying materials, typically metal, in order to produce finalized products. These machines utilize electricity, hydraulics, or pneumatics to eliminate surplus material from the workpiece using various cutting and grinding methods in order to produce the required shape, size, and surface texture. The operations conducted at a machine shop are wide-ranging and include activities such as turning, milling, drilling, grinding, shaping, and planing. Every procedure employs specialised machine tools to produce precise geometric features and tolerances.

Basic Operations in a Machine Shop

Common operations performed in a machine shop include:

- Turning: Removing material from a rotating workpiece to create cylindrical shapes.
- Milling: Cutting material using a rotating multi-point cutter to produce flat surfaces, grooves, and complex shapes.
- Drilling: Creating holes in a workpiece using a rotating drill bit.
- Grinding: Removing material using an abrasive wheel to achieve precise dimensions and a fine finish.
- Shaping and Planing: Removing material using a reciprocating tool to create flat surfaces.

Common Machine Tools

Some of the most common machine tools found in a machine shop are:

- Lathe
- Milling machine
- Drilling machine
- Grinding machine
- Shaper
- Planer

Machine	Machine Tool
It is used to complete an action or process the things.	It is used to cut and remove the material to give a particular shape to the workpiece.
A machine is one which processes a definite task. while	A machine tool is one which produces something.
Example: Printing machine, Lamination machine, Washing machine, etc.	Example: Lathe, Milling machine, Drilling machine, Grinding machine, Shaper, Planer, etc.

Safety precaution in Machine Shop

Personal Protective Equipment (PPE)

- Eye protection: Safety goggles must be worn at all times.
- Hearing protection: Earplugs or earmuffs are essential for reducing noise exposure.
- Hand protection: Gloves should be worn when handling sharp edges or hot materials.
- Foot protection: Sturdy, closed-toe shoes are mandatory to protect feet from falling objects.
- Respiratory protection: If working with hazardous materials, use appropriate respiratory protection.

Machine-Specific Safety

- Keep the workshop neat and tidy. Many accidents are caused due to people tipping over things left, trying over gangways.
- Do not run in the workshop. Walk carefully.
- See that the floor is free from slippery substances.
- Keep gangways clean and clear.
- Everything should be in place and waste should be provided to throw waste metal pieces.
- The workshop should have proper lighting and ventilation.
- Do not lean against the machine, it is bad practice and also a dangerous one.
- Do not work on a machine in bad light.
- Never switch on a machine unless or otherwise you know all the mechanisms and operation of the machine.
- When using any grinding parts, protect the eyes by wearing goggles or using shields.
- Do not clean metal chips by hand, use wire brush for cleaning.
- Be in a habit of cleaning the machine, equipments and tools regularly.

Lathe and its different part:

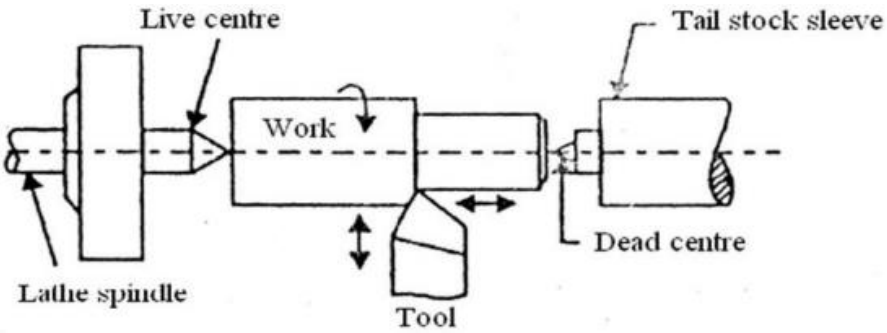

A lathe is a machine tool that rotates a workpiece about an axis to perform various material removal operations like cutting, sanding, drilling, and turning on the workpiece and create desired shape. The main function of Lathe machine is to remove excess material in the form of chips by rotating the work piece against a stationary cutting

tool. This is accomplished by holding the work securely and rigidly on the machine and then turning it against cutting tool which will remove metal from the workpiece. To cut the material properly the tool should be harder than the material of the work piece, should be rigidly held on the machine and should be fed or progress in a definite way relative to the work. It is often called the "mother of all machines" due to its versatility. Lathe machines can be operated manually or using CNC technology. These Lathe machines are available in different sizes for different applications.

They are vastly used in machining industries or manufacturing sectors for creating parts with precise dimensions and complex figures. The lathe machines consist of various parts like headstock, tailstock, bed, tool post, carriage, etc., and the types of lathe machines include turret lathes, engine lathes, wood lathes, and vertical lathes each with specific advantages and features.

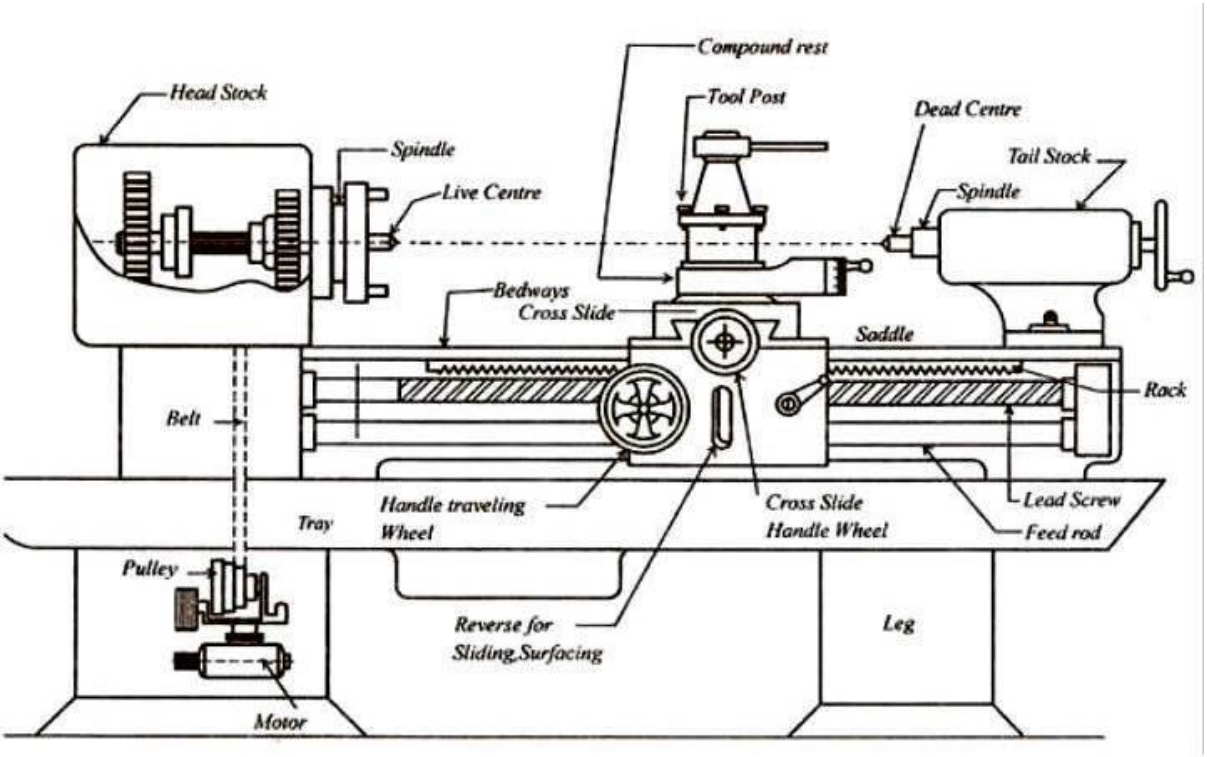

How it works:

- The workpiece is held between two points or in a chuck and rotated.
- A cutting tool is moved across the rotating workpiece to remove material and shape it.
- The lathe can produce cylindrical shapes, tapers, threads, and more.

Parts of Lathe:

Bed: Bed is the base of the lathe. The headstock is mounted on the left end; the carriage is in the middle and the tailstock at the right end of bed. The bed is made up of cast iron, alloyed with nickel, chromium. The bed is made up of cast iron to observe shock and vibration created during machining. The guide ways of the bed may be flatter inverted ‘V’ shape.

Headstock: It is mounted on the left end of the bed. It carries a hollow spindle. The live center can be attached in the spindle. The spindle nose is threaded. In chuck

faceplates can be attached to the spindle. The headstock may be back threaded type. The headstock has two types of driving mechanism

• Back geared mechanism

• Belt driven mechanism

Main Spindle: A main spindle is a hollow cylindrical shaft. Its face has a standard moarse taper. It is used for holding the live Centre or collet. The spindle rotates on two large bearings housed on the head stock casting. The front end of the spindle is threaded, those are used for holding the chuck, face plate, driving plate and catch plate.

Tailstock: A tail stock is located on the inner guide–ways at the right side of the bed opposite to the head stock. The body of the tail stock is bored and house the tail stock spindle. The spindle moves front and back inside the hole. It has a taper hole to receive the dead Centre or shunk of tools such as drill or reamer. Its body is made up of cast iron.

Lead Screw: It is used to transmit power to carriage through gear and clutch arrangement in the carriage apron.

Live Center: A Live Center is mounting on bearings and rotates with the work. Live centers are using to hold or support a work-piece.

Dead Center: A dead center may be use to support the work piece at either the fixed or rotating end of the machine. Dead centers are typically fully harden to prevent damage to the important mating surfaces of the taper and to preserve the 60° angle of the nose.

Carriage: A carriage is located between the head stock and tail stock on the lathe bed guide–ways. It can be moved along the bed either towards or away from the head stock. It has several parts to support, move and control the cutting tool.

Saddle: It is H–shaped casting. The saddle connects the pair of bed guide–ways as a bridge. It fits over the bed and slides along the bed between head stock and tail stock. The saddle can be moved by providing hand feed or automatic feed.

Apron: The front portion of a carriage call as apron. It consists of all control keys**.** The handle operates the carriage. It has a housing, which has a set of gears and split nut. Automatic feed and threading control are on the apron.

Tool Post: It is located on the top of the compound slide. It is used to hold the tools rigidly. Tools are selected according to the type of operation and mounted on the tool post and adjusted to a convenient working position. There are different types of tool post, which are as follows:

a) Single Way / Screw Tool Post
b) Four Way Tool Post
c) Quick Change Tool Post
d) British Type Tool Post

Cross slide: It is situated on the saddle and slides on the dovetail guide–ways at right angles to the bed guide–ways. It carries compound rest, compound slide and tool post. Cross slide hand wheel is rotated to move it at right angle to the lathe machine axis. The cross slide hand wheel is graduated on its rim to enable to give known amount of feed as accurate as 0.05 mm.

Compound Rest: It is a part which connects to cross slide and compound slide. It is mounted on the cross slide by tongue and groove joint. The compound rest can be swivelled to the required angle while turning tapers. A top slide known as compound slide is attached to the compound rest by dovetail joint.

Compound Slide: Compound slide is a T-shaped rounded slot, which is fixed with cross slide upper surface by two bolts, which is related to a micrometer sleeve and screw handle with the outer edge of screw. Taper turning can be possible by setting the compound slide at half of a required angle. This slide is only used for less long job taper turning. The automatic feed is not possible in compound slide.

Feed Mechanism: There are several mechanisms to make the carriage and cross slide move automatically to change the direction of their movement. Some important feed mechanisms are as follows:

a) **Belt Feed Mechanism:** Belt feed mechanism is widely use in oldest lathe machines. In this, a cone stepped pulley is used for providing the different types of speed. To change the speed, a lever is used for sliding the belt at one pulley to another. Belt feed mechanism has a disadvantage of the belt slipping in pulley changing process.

b) **Gear Feed Mechanism**: In the gear feed mechanism, the power is transmitted from spindle to feed rod or lead screw by power gear train. Gear 1 is situated at the back side of the spindle and the tumbler bracket consists of the gears 2, 3, 4 and 5. A lever operates the bracket. This bracket is pivoted about the axis of the stud gear. This position of the bracket can be arranged in three different stages namely: Neutral Position, Forward Position and Reverse Position.

Types of lathes

Lathe machines are classified according to their construction and design. Some of them are:

- Speed lathe machine
- Engine lathe or center lathe machine
- Tool room lathe machine
- Special purpose lathe machine
- Capstan and turret lathe machine

Speed lathe machine: Speed lathe is the simplest of all types of lathe in construction and operation. It consists of a bed, a head stock, a tail stock and a tool–post mounted on an adjustable slide. The spindle speed is about 4000 rpm. They named because of very High Speed of head stock spindle.

Engine lathe (center lathe): The term ”engine” is associated with the lathe which is early driven by steam engines. An engine lathe is also know as a reproductive machine because of its production capabilities. Engine lathes are an excellent tool, which aids in the creation of many modern tools.

Advantages: It is using for mass production of products.

Disadvantages: It is very difficult to program in machine language.

<u>Tool room lathe:</u> Tool room lathe is similar to an engine lathe. This lathe is mainly using for precision work on tools, Dies, Gauges and in making work where accuracy is necessary. It is used for making precision components in the tool room.

<u>Capstan and turret lathes</u> These are both semi-automatic production lathes that can perform multiple cutting operations simultaneously:

Purpose: Both are used to produce large numbers of identical parts in a short time.

Operation: Both use a hexagonal turret head with multiple tools to perform operations like turning, drilling, facing, and thread cutting.

Differences: The main difference between the two is how the turret head is mounted:

Capstan lathe: The turret head is mounted on a ram that slides on the saddle. This type of lathe is often used for bar type jobs.

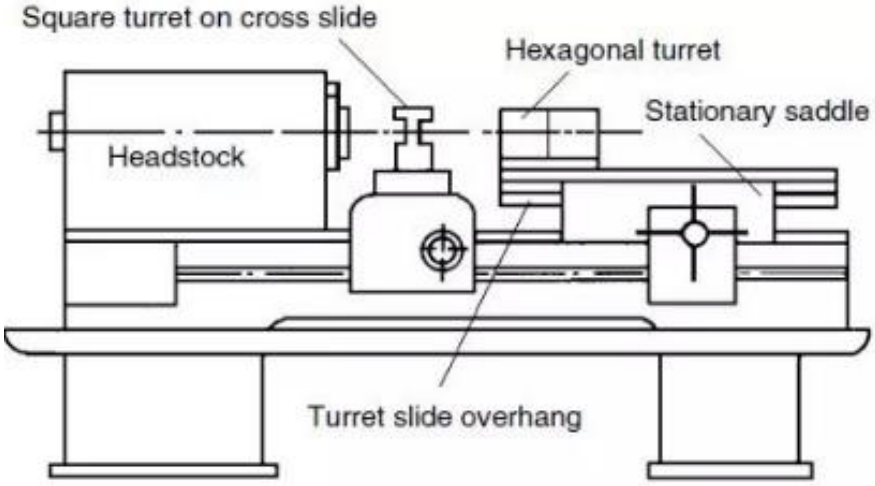

Capstan

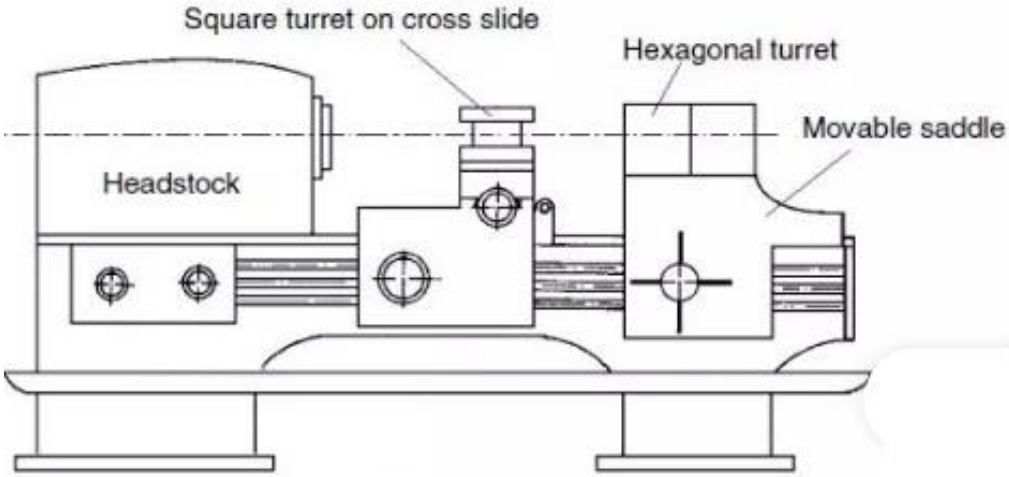

Turret

Turret lathe: The turret head is mounted directly on the saddle. This type of lathe is often used for chucking type work.

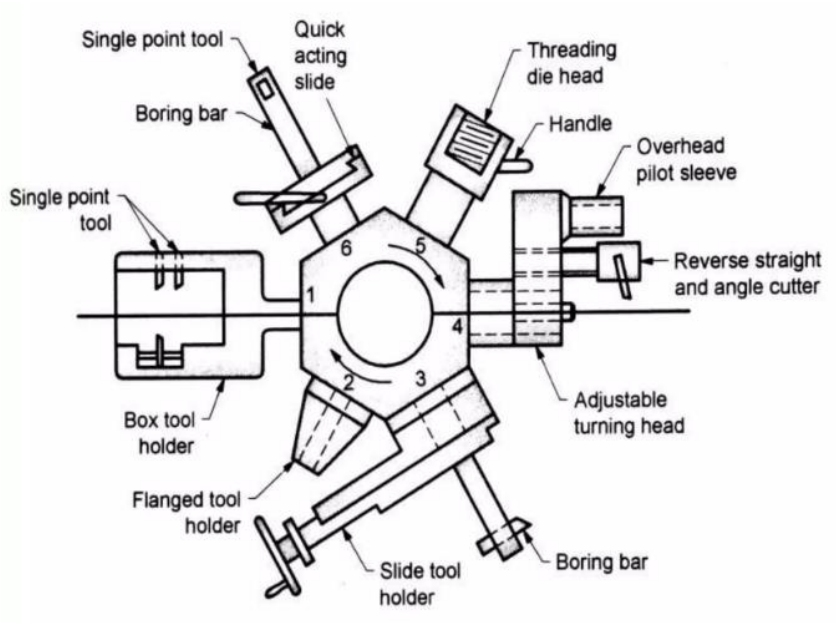

<u>Special purpose lathe:</u> Special purpose lathes are specifically designed to perform particular machining operations or handle specific types of workpieces more efficiently than general-purpose engine lathes. They incorporate unique features and configurations to optimize performance for their intended applications.

Key Characteristics:

- Specialized design: Tailored for specific tasks.
- Increased efficiency: Optimized for particular operations.
- Higher productivity: Can often outperform general-purpose lathes in specific applications.
- Unique features: Incorporate special components or mechanisms.

Examples of Special Purpose Lathes:

- Automatic lathe: Employs automation for tool changes, feed, and speed control, improving efficiency and precision.
- Copying lathe: Used to replicate the shape of a master pattern onto a workpiece.
- Crankshaft lathe: Specifically designed for machining crankshafts with specialized tooling and features.
- Wheel lathe: Used for machining railway wheels, automotive brake drums, and similar components.
- Bench lathe: A smaller, bench-mounted lathe for delicate work.
- Gap bed Lathe: In this lathe a bed gap is maintained near head stock to machine jobs of large diameter.

<u>Applications:</u> Special purpose lathes are used in a variety of industries, including automotive, aerospace, manufacturing, and repair shops. They are critical for high production rates, precise machining, and specialized component manufacturing.

Lathe Accessories:

<u>3-Jaw Chuck:</u>

A 3-jaw chuck also known as self centering chuck is a common work-holding device used in machine shops, particularly on lathes. It's designed to hold and securely clamp cylindrical workpieces for various machining operations.

Construction and Operation

Body: The main component is made of cast iron or steel, providing strength and rigidity.

Jaws: Three hardened steel jaws are mounted on a scroll mechanism within the chuck body.

Scroll: A threaded mechanism that controls the movement of the jaws.

Key: Used to tighten or loosen the jaws.

The jaws are designed to move inward or outward simultaneously when the scroll is turned. This self-centering action ensures that the workpiece is accurately centered in the chuck.

Advantages of 3-Jaw Chucks:

- Quick and Easy Setup: The 3-jaw chuck's simplicity allows for rapid setup and adjustment.
- Self-Centering Mechanism: When tightening the jaws, the 3-jaw chuck automatically centers the workpiece.
- Suitable for Repetitive Operations: Ideal for working on numerous identical or similar workpieces.

Disadvantages of a 3-Jaw Chuck:

- Limited Gripping Range: Designed primarily for cylindrical or round workpieces.
- Less Accuracy Compared to 4-Jaw Chuck: The fixed positions of the three jaws may lead to slight inaccuracies.
- Less Gripping Force: Larger or heavier workpieces demand a stronger grip, which the 3-jaw chuck may struggle to provide.

4-jaw Chuck:

A 4-jaw chuck also is another common work-holding device used in machine shops, especially for precise and accurate clamping of workpieces. Unlike 3-jaw chucks, 4-jaw chucks offer independent control over each jaw, allowing for precise centering and clamping of irregular or odd-shaped workpieces.

Construction and Operation

Body: Similar to a 3-jaw chuck, the body is made of cast iron or steel for strength and rigidity.

Jaws: Four independent jaws are mounted on a screw mechanism.

Screws: Each jaw is adjusted individually using a screw mechanism.

The independent movement of the jaws allows for precise positioning and clamping of the workpiece. This makes 4-jaw chucks ideal for applications requiring high accuracy and concentricity.

Advantages of 4-Jaw Chucks:

- Precise clamping of irregular or odd-shaped workpieces.
- High accuracy and concentricity.
- Versatile for various workpiece shapes and sizes.

Disadvantages of 4-Jaw Chucks:

- More time-consuming to set up compared to 3-jaw chucks.
- Requires more operator skill for accurate positioning.
- Generally, more expensive than 3-jaw chucks.

Applications:

4-jaw chucks are commonly used in tool rooms, repair shops, and production environments where precision and accuracy are critical. They are ideal for holding workpieces with irregular shapes, tapers, or keyways.

In conclusion, 4-jaw chucks offer superior accuracy and versatility compared to 3-jaw chucks, making them essential for many machining operations. While they require more setup time and operator skill, the benefits in terms of precision often outweigh these drawbacks.

3-Jaw Chuck

Known as self-centering chuck or universal chuck

All the jaws are made to slide simultaneously by an equal amount within the slots provided on the body by rotating any one of the three pinions..

Can hold only cylindrical or hexagonal jobs.

Cannot be used for eccentrics.

Gripping force is less.

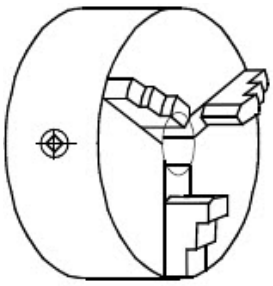

3 Jaw chuck

4-Jaw Chuck

Known as independent chuck. chuck.

Individual jaws are made to slide independently within the slots provided on the body by rotating the respective pinions

Can hold both cylindrical and odd shaped jobs.

Can be used for machining the eccentrics by offsetting the work piece.

Grip is more powerful.

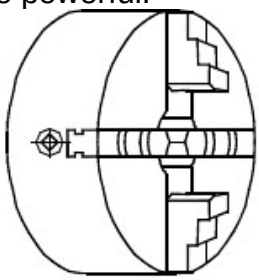

4 Jaw chuck

Lathe Centre:

A lathe center is a precision-ground tool with a conical tip used to support and accurately position a workpiece on the axis of a lathe. It's an essential component in many lathe operations.

Types of Lathes Centers

There are two primary types:

- Dead Center: This is a fixed center, typically mounted in the tailstock of a lathe. It provides support for the workpiece but does not rotate.

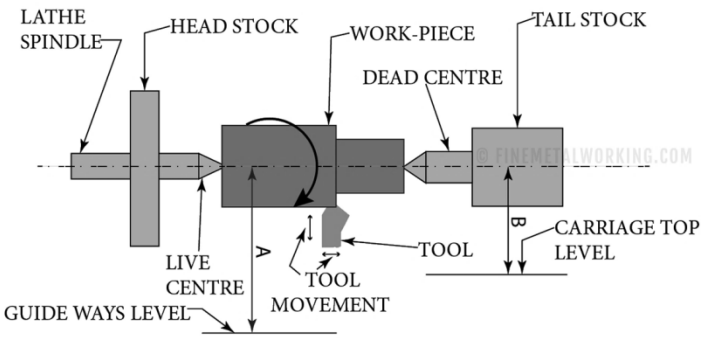

- Live Center: This center is mounted on a rotating spindle and provides both support and rotation for the workpiece.

Function:

- Support: Centers provide a stable support point for the workpiece during machining.
- Accuracy: Ensure precise alignment of the workpiece for accurate cutting and finishing.
- Rotation: Live centers facilitate workpiece rotation.

Materials and Construction:

Lathe centers are typically made from high-speed steel or hardened tool steel to withstand the rigors of machining. They are often heat-treated for increased durability and wear resistance.

Importance:

Lathe centers are crucial for achieving accurate and consistent results in lathe operations. They contribute to the overall quality and precision of machined components.

Mandrel:

A mandrel is a cylindrical tool used to hold and support hollow or tubular workpieces during machining operations. It's essentially a shaft with specific features that allow it to securely grip the inner diameter of the workpiece.

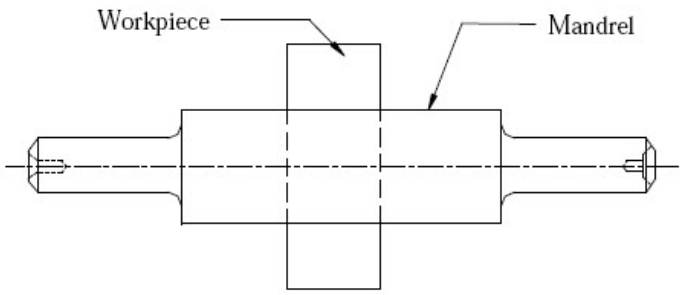

Types of Mandrels:

There are several types of mandrels, each designed for specific applications:

- Expanding Mandrel: This type has adjustable jaws or segments that can be expanded to grip the workpiece's inner diameter.
- Tapered Mandrel: With a tapered bore, it relies on the workpiece's interference fit for secure holding.
- Flanged Mandrel: Features a flange at one end to prevent the workpiece from sliding off.
- Thread Mandrel: Has threads at one end to secure a nut against the workpiece.

Function:

- Support: Provides support to the workpiece during machining, preventing it from collapsing or deforming.
- Alignment: Ensures accurate alignment of the workpiece for precise machining.
- Holding: Grips the workpiece securely, preventing it from slipping or rotating.

Applications:

Mandrels are commonly used in lathe operations to machine the external surfaces of hollow components such as pipes, tubes, and shafts. They are also used in other machining processes like grinding and polishing.

Face plate:

A face plate is a flat, circular workpiece holding device used on a lathe. It is attached to the spindle nose and provides a mounting surface for various workpieces that cannot be directly clamped in a chuck.

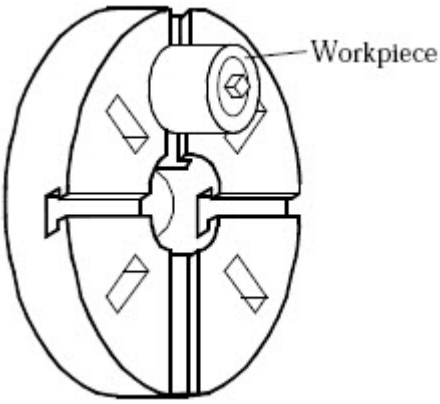

Construction and Features:

- Circular shape: Designed to fit the lathe spindle.
- Mounting holes: Equipped with multiple holes for attaching workpieces using bolts or clamps.
- Material: Typically made of cast iron or steel for strength and rigidity.

Applications:

Face plates are used for holding a variety of workpieces, including:

- Irregular shapes: Workpieces that cannot be easily clamped in a chuck.
- Large-diameter workpieces: Exceeding the capacity of a chuck.
- Assembly work: Holding multiple components for simultaneous machining.

Advantages:

- Versatility: Can hold a wide range of workpieces.
- Flexibility: Allows for custom setups and clamping arrangements.
- Rigidity: Provides a stable platform for machining operations.

Disadvantages:

- Requires more setup time compared to chucks.
- Can be heavier and less convenient to handle than chucks.

Lathe dog:

A lathe dog (also known as a carrier dog or driver) is a mechanical device used in machining and turning operations. Here are the key points about lathe dogs:

Purpose: Lathe dogs transmit rotational power from the lathe's spindle to the workpiece, allowing precise shaping, cutting, and forming.

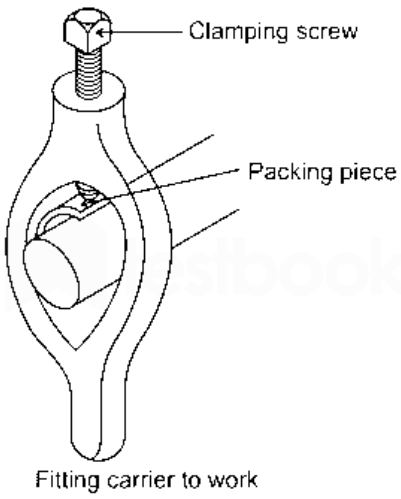

Components:

- Body: The main part of the lathe dog.
- Driving Arm: The component that engages with the workpiece.
- Function: Lathe dogs hold and rotate the workpiece during turning operations.

Straight Tail Lathe Dogs: Require at least one driving stud mounted on the faceplate.

Bent Tail Lathe Dogs: Can engage directly with a driving faceplate slot or a chuck jaw.

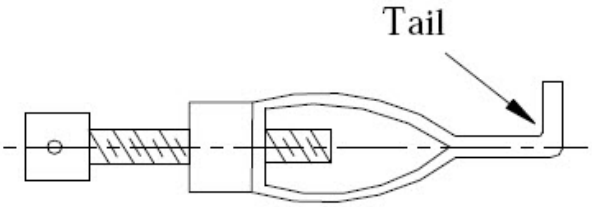

Rest:

Rests is essentially a movable support that can be adjusted and positioned according to the required operation. The rest helps to stabilize the cutting tool and ensure that it remains in the correct position during use, which is essential for achieving accurate and precise cuts. There are various types of rests available for lathes, including the steady rest, follower rest, and traveling rest, each with its specific functions and applications. The type of rest used will depend on the material being machined, the size of the workpiece, and the type of operation being performed. A properly adjusted and positioned rest can significantly improve the quality and accuracy of the machining process.

Types of Rest:

There are two types of Rests we use in a workshop:

- Steady rest or Fixed Steady
- Follower reset or Travelling Rest

Steady Rest:

It is used when we perform machining or drilling operations by holding the job in the chuck. Steady rest is fitted on one side of the lathe bed at a fixed position, and it is used for the prevention of bending, which is applied by the cutting tool or under its (Workpiece) own weight. A steady jaw consists of three jaws that are 120 degrees apart from each other. Two of these jaws are adjustable and the other one is fixed. We can use more than one rest depending on the length of the workpiece.

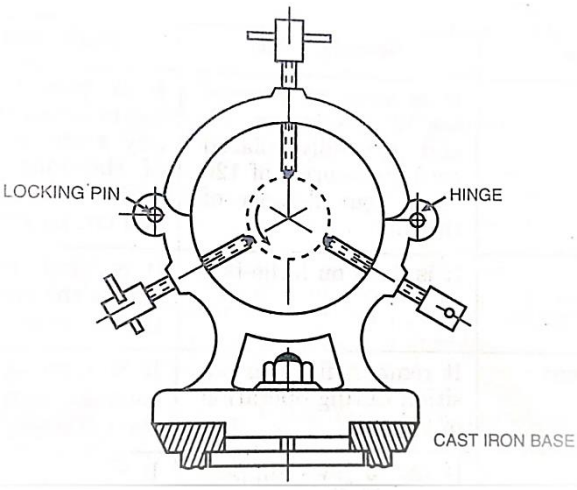

Follower Rest:

Follower rest is generally used for the turning operation of a thin round bar. The follower rest is connected to the lathe carriage and that's why it can be moved accordingly with the carriage. The follower rest is placed on the opposite right side of the tool post. We only need one follower rest to complete any length of the job as it moves accordingly with the tool post and gives continuous support to the job.

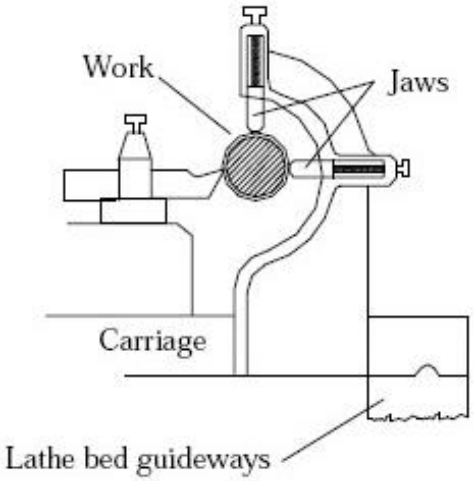

Lathe operations:

Though lathe is used for producing cylindrical jobs, with special accessories and attachments, it can be used for machining of non-cylindrical jobs. The different operations that can be done on cylindrical job include turning, facing, knurling, grooving, form turning, parting, chamfering, eccentric turning, taper turning, taper turning and drilling. These operations are described briefly in the following sections.

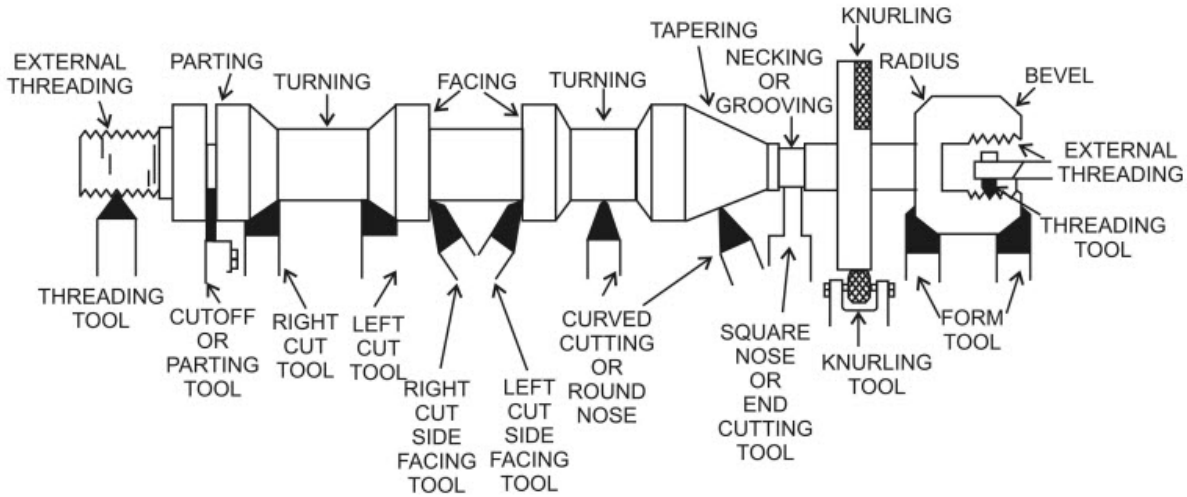

Centering:

Centering is the precise alignment of a workpiece with the axis of rotation of a lathe. The centering method involves using one or more center holes or marks on the workpiece's end to guide the machine tool's live center or dead center into the proper position.

In lathe centering, a center drill or spotting drill creates a small indentation or "spot" on the end of the workpiece. The lathe's live or dead center is then inserted into the center hole or against the center mark, and the workpiece is rotated to check for runout or misalignment. Adjustments are made as needed until the workpiece is properly centered and ready to cut.

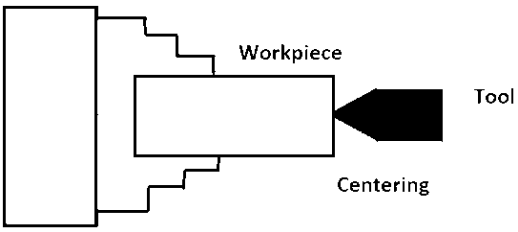

The milling centering method entails using edge finders, dial indicators, or other precision tools to locate and align the workpiece with the milling machine's spindle axis. This could include indicating the center of a bore or feature on the workpiece, or aligning it with the machine's vise or other fixture.

Facing:

Facing is an operation used to produce a flat surface at right angles to the rotational axis of the job. In this case, the tool is fed at right angles to the job while the depth of cut is provided by the axial motion of the carriage. The job may be held in a chuck or between centers. In this center about half of the front cone is removed to give access to the tool.

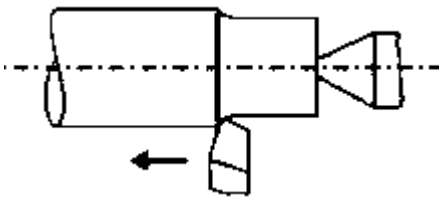

Plane turning:

Turning is the operation in which a cylindrical surface is produced. The workpiece is supported

between centers or in any other work holding device and rotated at the desired speed. The tool is first given a depth of cut by using the cross-slide motion of the carriage and then given an axial feed by hand or power. Which can be made to overlap to produce a cylindrical surface on the workpiece by adjusting the feed and having a large nose radius. Repeated cuts may be necessary to obtain a desired reduction of size. A final finishing cut may be given to the workpiece with a low depth of cut and feed but high speed to attain the desired degree of surface finish.

Step Turning:

Turning operation where the entire length is divided in steps of different diameter, but each step individually finished by using plain turning is known as stepped turning.

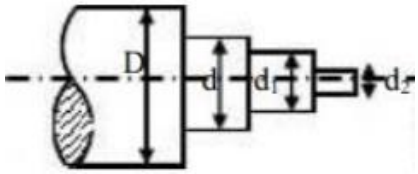

Parting:

The part is removed so that it faces the ends. For this, the parting tool is involved in slowly to make operate. To cut deeper the parting tool is pulled out and transferred to the side for the cut and to prevent the tool from breaking.

Grooving:

The process of creating a narrow slot on the workpiece is called grooving. It is also known as recessing or necking. This operation is also denoted as necking. Usually, grooves are cut on a cylindrical surface in narrow shape by means of grooving tool. The cutting edge of grooving tool is kept narrow.

Chamfering:

Chamfering is the process of bevelling the extreme ends of a workpiece. It is done to remove the burrs, to protect the end of the workpiece from being damaged and to have a better look.

Knurling:

Knurling is the process of embossing a diamond-shaped pattern on the cylindrical surface of a workpiece. Knurling is done on the workpiece so that it does not slip when held and operated by hand. The workpiece is supported in the chuck but since quite heavy forces are involved in the knurling process an additional support is generally provided at the free end with the tailstock center.

It is the process of producing rough surface of embossing diamond shaped pattern on a smooth surface of a cylindrical job. Knurling provides an effective gripping surface on a job to prevent it from slipping when operated by hand. Knurling, as shown in Figure, may be of two types:

- straight or parallel, and
- diamond type.

Taper turning:

Taper turning is the process of producing external and internal conical surfaces by combining the rotation of the job and the relative angular feed of the tool. Tapers are used on many tools and machine components for alignment and easy holding. Such as the shank of twist drills, end mills, and reamers, spindles of lathe and drilling machine.

When the diameter of the bar either increases or decreases along the length of the bar then it is called a taper.

This operation is performed on a lathe machine with the help of a taper-turning attachment.

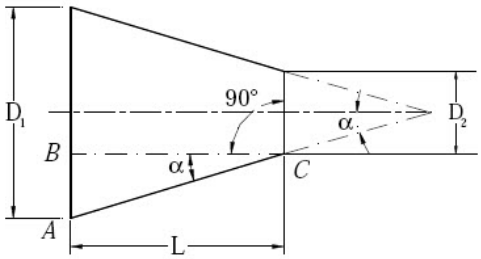

The formula for taper angle α is, $\tan\alpha = \frac{D-d}{2L}$

where, α = taper angle,

D = large diameter of the bar,

d = small diameter of the bar.

L =length of the bar.

The amount of taper is given by, $Taper = \frac{D-d}{L}$

Generally, the following methods are used for taper turning: (a) By swiveling compound rest (b) By setting over the tail stock (c) By taper turning attachment (d) By forming or broad-nose tool

<u>Taper turning by swiveling the compound rest:</u>

<u>Steps:</u>

- Attach the tool to the compound rest, which is mounted on a circular base that can be swiveled.
- Set the compound rest to the desired half taper angle.
- Rotate the compound slide screw to feed the tool at the angle and generate the taper.
- Rotate the workpiece as usual.
- Use the compound rest slide handwheel to move the tool forward instead of the carriage.
- This method is useful for producing short and steep tapers.

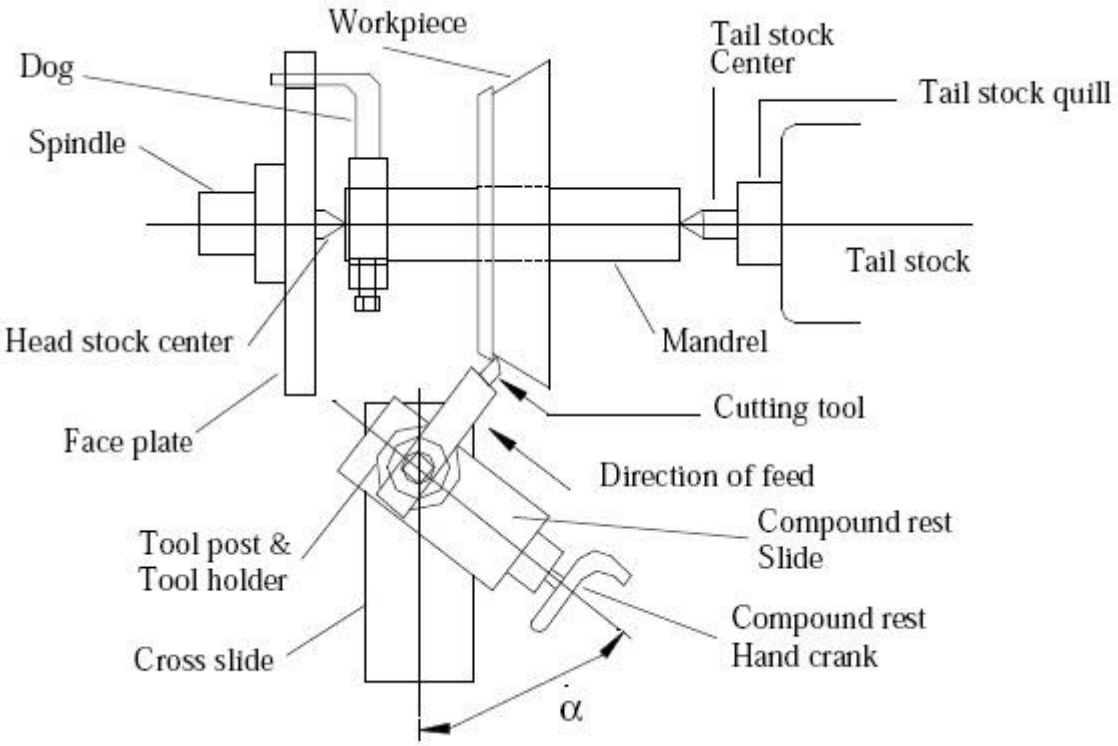

Taper turning by setting over the tail stock:

In this method the normal rotating part of the lathe still drives the workpiece (mounted between centres), but the centre at the tailstock is offset towards/away from the cutting tool. Then, as the cutting tool passes over, the part is cut in a conical shape. This method is limited to small tapers over long lengths.

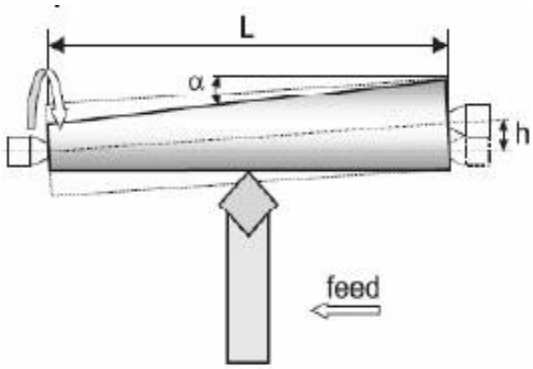

The tailstock offset h is defined by: $h = L \sin \alpha$

where, L is the length of workpiece, and α is the half of the taper angle.

Or $h = \left(\frac{D-d}{2}\right)\left(\frac{L}{l}\right)$

Where, D is major diameter, d is minor diameter, L is total length of job, l is tapered length of job.

Taper turning by taper turning attachment:

In the taper turning attachment method, a specialised attachment is used to perform taper turning. This attachment includes a guide bar, typically centered, which can swing to the necessary taper angles. The tool moves in parallel to the guide bar, and the guide bar can be rotated to achieve the desired taper angle. This method allows for versatile taper turning and can accommodate various workpiece sizes.

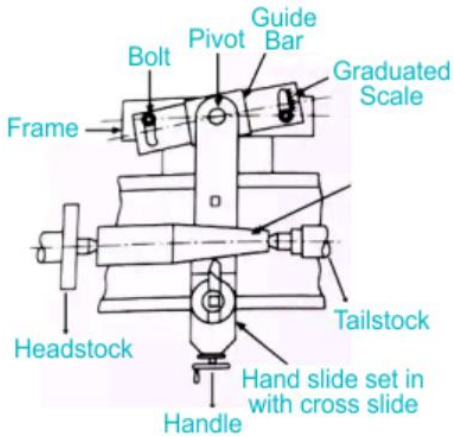

Taper turning by forming or broad-nose tool:

The form tool has a straight cutting edge set at the desired taper angle. Form tool is a replica of the taper to be produced i.e. the angle between the straight cutting edge and the rotational axis of the job equals taper angle α or one half the included angle of the taper. The tool is fed against a rotating job. The shape of the tool is reproduced on the workpiece. This method is limited only for short length tapers.

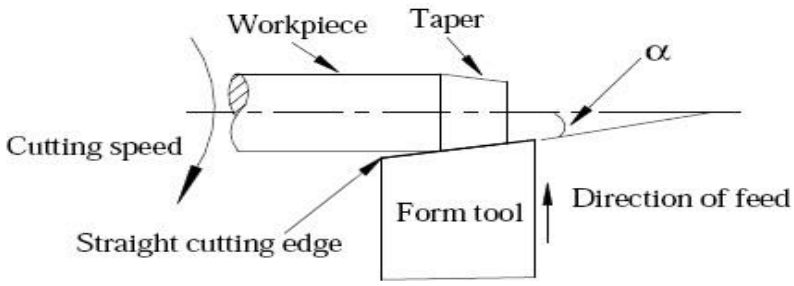

Drilling:

The workpiece is held in a chuck or on a faceplate and the drill is held in the tailstock quill or a drill chuck held in the quill. The taper in the quill ensures that the axis of the drill is concentric with the rotational axis of the spindle. Feeding is done by movement of the tailstock quill. Reamers, counterbores and other cutting tools may also be used similarly in place of the drill.

Threading:

In thread cutting operation, there is a certain ratio of motion between the travel of tool and the rotation of the spindle. This ratio is directly affected by the lead screw which is attached to the lathe spindle through gears..

$$\frac{\text{Nos of teeth on Driver (Stud)}}{\text{Nos of teeth on Driven (Lead screw)}} = \frac{5}{127} \times \frac{\text{Lead of threads on job in mm}}{\text{Lead of thread on lead screw in inches}}$$

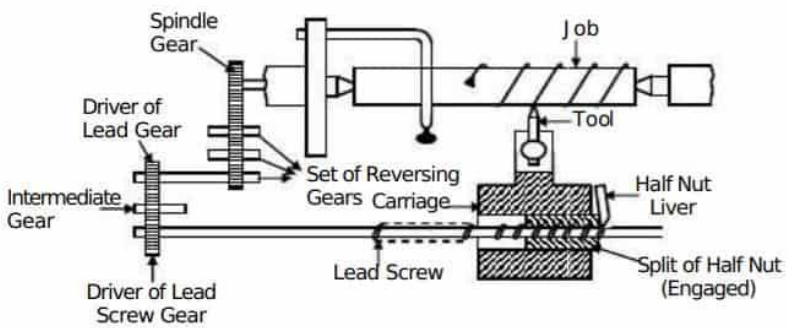

For cutting threads of different pitches, the stud (driver gear) and lead screw gear (driven gear) are changed as per desired ratio of revolution between the spindle and the lead screw. The ratio between the teeth on stud and lead screw gear can be calculated by the given formula, thread cutting on lathe Machine

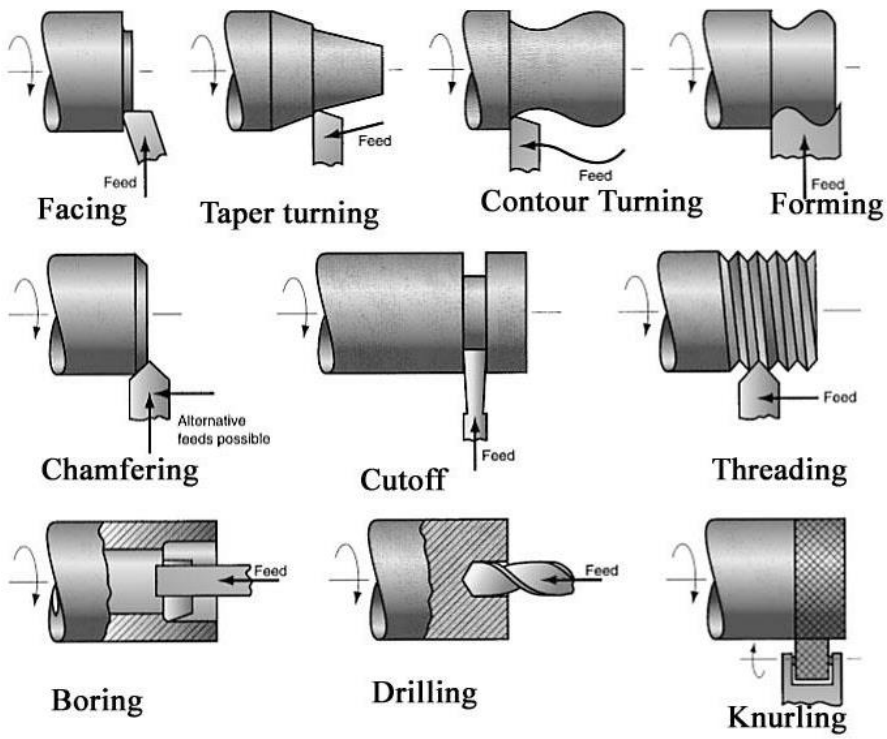

<u>SECOND CLASS</u>

Aim of Job:

Job drawing:

Tools Used:

Operations involved:

Procedure

WELDING SHOP

Definition/Introduction

Welding is a fabrication process that joins two or more parts together through the application of heat, pressure, or both. This process causes the materials to melt and fuse together, forming a solid, durable joint upon cooling. Welding can be applied to metals, thermoplastics, and even wood. The completed joint is known as a "weldment," and the materials being joined are referred to as "parent materials." Unlike processes such as brazing or soldering, welding involves melting the base material, which allows for a more integrated and often stronger joint.

Basic Principle of Welding

Welding operates on the principle of creating a permanent bond between materials by applying heat to the point where the materials meet. The basic steps involved include:

1. **Heating:** A heat source generates sufficient temperature to melt the base metals and/or a filler material.
2. **Fusing:** The molten metal forms a weld pool that fuses the parts together.
3. **Cooling:** The weld pool cools and solidifies, forming a strong joint.

Features of Completed Weld

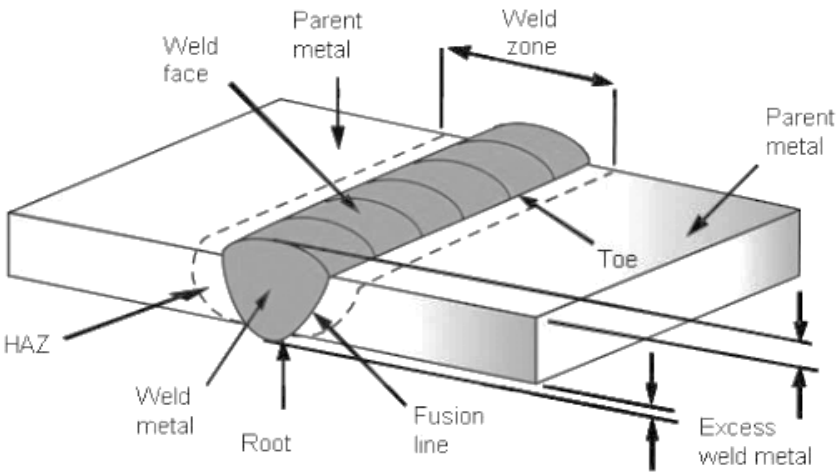

1. **Parent Metal:** The original material being welded.
2. **Weld Metal:** The molten metal that solidifies to form the weld.
3. **Heat Affected Zone (HAZ):** Area adjacent to the weld that experiences changes in its properties due to the welding heat, but is not melted.
4. **Fusion Line:** The boundary between the weld metal and the HAZ.
5. **Weld Zone:** The area that includes both the weld metal and the HAZ.
6. **Weld Face:** The surface of the weld that is visible after welding.
7. **Weld Root:** The deepest point of the weld where it intersects with the base metal.
8. **Weld Toe:** The junction between the weld face and the base metal, important for stress concentration.
9. **Excess Weld Metal:** Also known as reinforcement or overfill; the additional metal beyond the required joint area.

Advantages of Welding:

1. **Strength and Durability:** Welds create strong and durable joints that can be stronger than the base materials.
2. **Versatility:** Welding can be performed in various environments, including outdoors and in confined spaces.
3. **Economical:** The process is cost-effective compared to other joining methods.
4. **Aesthetic Finish:** Provides a clean and professional finish when done correctly.

Disadvantages of Welding:

1. **Safety Hazards:** Welding can be hazardous, posing risks such as burns, electric shock, and exposure to harmful fumes and UV radiation.
2. **Difficulty in Dismantling:** Once welded, joints are difficult to disassemble without damaging the materials.
3. **Skill Requirements:** Requires skilled labor and precision to ensure quality results.
4. **Equipment Needs:** Often requires a steady supply of electricity and specialized equipment.

Applications

Welding is widely used in various fields:

- **Construction:** For building structures like bridges, skyscrapers, and infrastructure.
- **Automobile Industry:** In the manufacturing and repair of vehicles.
- **Manufacturing:** Creating parts and products in various industries.
- **Art and Sculpture:** For creating artistic metalwork and sculptures.
- **Maintenance and Repair:** Used to fix and maintain machinery and equipment.

Safety precaution in Welding Shop

Welding involves numerous hazards that can lead to serious health and safety risks. To protect workers, welding safety measures must be strictly implemented. Here's an elaborate breakdown welding safety and how to ensure it:

1. **Conduct Welding in a Designated Safe Location**
   - **Assess Surroundings**: Before starting welding, check the area for flammable materials or equipment.
   - **Move Fire Hazards**: If possible, relocate movable fire hazards away from the welding site.
2. **Protect Yourself from Fire Hazards**
   - **Safeguards**: Implement appropriate safeguards to protect immovable fire hazards.
   - **Contain Heat and Sparks**: Use shields or curtains to confine heat, sparks, and hot slag produced during welding.

3. **Consider the Risks**
   - **Risk Assessment**: Perform a thorough risk assessment to identify potential hazards like fumes and UV radiation.
   - **Control Measures**: Establish controls to manage or eliminate identified risks. Welding should not proceed if risks are not adequately controlled.
4. **Maintain Your Equipment**
   - **Platform Safety**: Ensure platforms, scaffolds, and runways are secured with railings, safety belts, or other effective safeguards.
   - **Clear Pathways**: Keep welding cables and equipment clear of passageways, ladders, and stairways to prevent tripping hazards.
5. **Wear Appropriate PPE at All Times**
   - **Protective Clothing**: Wear long-sleeved shirts and long pants without cuffs.
   - **Eye and Face Protection**: Use welding helmets or goggles to shield eyes from intense light and flying debris.
   - **Respirators**: Wear respirators to protect against harmful fumes.
   - **Hand and Foot Protection**: Wear gloves and boots to protect hands and feet from burns and electrical shocks.

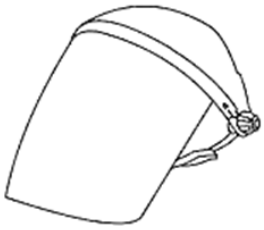

Fill Face Shield

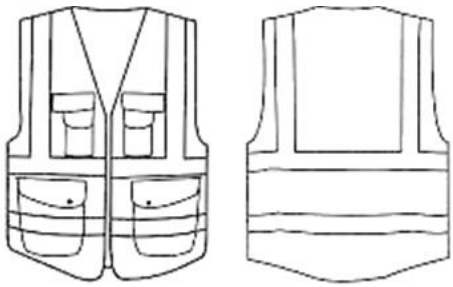

Apron/Chaps

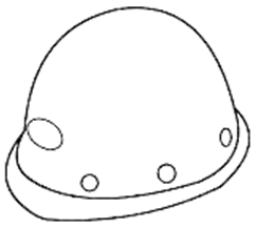

Welding Helmet

Welding Gloves

Safety shoe

6. **Ventilate the Welding Area**
   - **Air Quality**: Ensure proper ventilation to remove air contaminants and prevent the buildup of flammable gases or vapors.
   - **Oxygen Levels**: Maintain adequate ventilation to avoid oxygen-rich or oxygen-deficient atmospheres.

7. **Protect Yourself from Fumes and Gases**
   - **Ventilation Systems**: Use local exhaust or general ventilation systems to keep toxic fumes, gases, and dust below safe levels.
   - **Respiratory Protection**: When necessary, wear respirators to avoid inhaling harmful substances.
8. **Provide Warnings for Other Workers**
   - **Mark Hot Metal**: Clearly mark or warn other workers about hot metal surfaces after welding operations are complete to prevent accidental contact.
9. **Read Warning Labels and Relevant Documents, and Keep Training**
   - **Labels and Safety Data Sheets**: Ensure access to and understanding of warning labels and safety data sheets for materials used.
   - **Ongoing Training**: Provide continuous training for welders on new equipment, techniques, and safety procedures.
10. **Enforce Safety Procedures**
    - **Accountability**: Hold yourself and others accountable for adhering to safety guidelines.
    - **Report Violations**: Report any safety violations to ensure a safe working environment for everyone.

<u>Classification of welding</u>

Welding techniques are divided into two main categories based on how temperature and pressure are applied: **Plastic Welding (Pressure Welding)** and **Fusion Welding (Non-Pressure Welding)**. **Plastic Welding** involves heating the metal to a plastic state below its melting point and applying external pressure to achieve coalescence without melting the base metals or using filler material, which preserves the original properties of the metals. In contrast, **Fusion Welding** heats the joint material to its melting point, allowing it to solidify and form a joint; this process often involves a filler material and relies on heat, shielding, and sometimes external forces for the joining operation.

Welding can be classified as follows:

1. Gas Welding

1.1 Oxy-Acetylene Welding

- **Working Principle:**

- **Gas Mixing and Delivery:** Oxygen and acetylene gases are stored in separate cylinders. The gases are mixed in precise ratios through a welding torch. Typically, the ratio is about 1 part oxygen to 1 part acetylene.
- **Flame Formation:** When ignited, the gases produce a flame with a temperature range of approximately 3,200°C to 3,500°C (5,792°F to 6,332°F). The flame consists of an inner cone (the inner or carburizing flame) and an outer cone (the outer or oxidizing flame).
- **Metal Heating:** The flame is directed at the joint of the metals to be welded. The heat from the flame raises the temperature of the metal to its melting point. The metals melt and fuse together.

- **Filler Material:** A filler rod, usually made of the same or similar material as the base metals, may be fed into the weld pool. The filler rod melts and adds additional material to the joint, enhancing the weld's strength.
- **Cooling:** As the molten metal cools, it solidifies and forms a strong bond between the workpieces.

- **Applications:**

- **Automotive Repair:** Useful for repairing and fabricating parts of vehicle bodies and exhaust systems.
- **Metal Art and Sculpture:** Versatile for creating artistic pieces due to its ability to manipulate and shape metal precisely.
- **Sheet Metal Work:** Ideal for joining thin metal sheets in applications like ductwork and small-scale fabrications.
- **Pipe Fitting:** Effective for joining pipes in plumbing and heating systems, particularly where precision is needed.

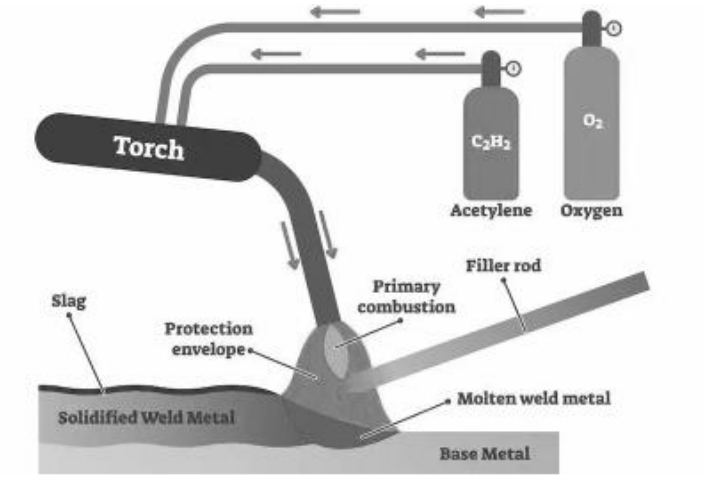

Oxy-acetylene Gas Welding

1.2 Pressure Gas Welding

- **Working Principle:**

- **Heating:** The metal parts to be welded are heated using an oxy-fuel flame, but the temperature is controlled so that the metals reach a softened state rather than a fully molten state.
- **Pressure Application:** Once the metals are sufficiently heated, pressure is applied to the joint using a hydraulic press or similar device. The pressure forces the softened metal together, promoting the formation of a solid bond.

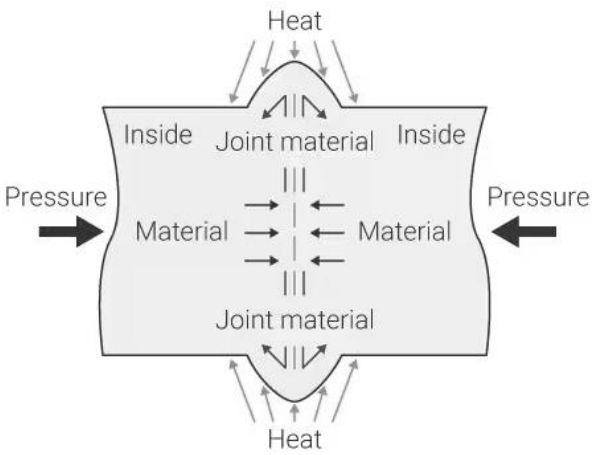

- **Weld Formation:** As the pressure is applied, the softened metal flows and fills the joint. Upon cooling, the metal solidifies and creates a strong weld.

- **Applications:**
  - **Railway Tracks:** Commonly used to join rail ends, ensuring the integrity of the track.
  - **Heavy Fabrication:** Suitable for large and thick metal components where complete melting is not necessary.

2. Arc Welding

2.1 Shielded Metal Arc Welding (SMAW)

- **Working Principle:**
  - **Arc Formation:** An electrode coated with flux is used. An electric current passes through the electrode, creating an arc between the electrode and the base metal.
  - **Heat Generation:** The arc produces intense heat, melting the electrode and the base metal. The flux coating on the electrode generates a shielding gas to protect the weld pool from atmospheric contamination.

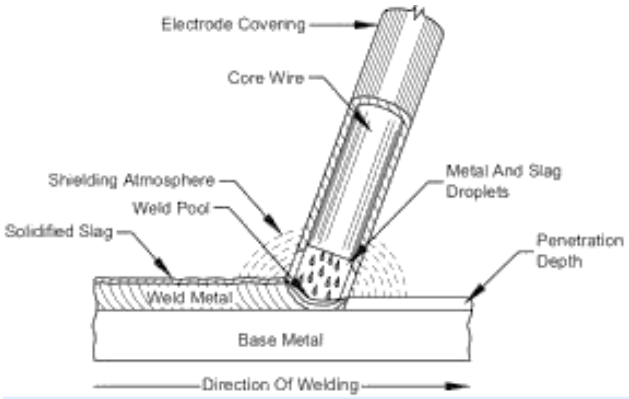

  - **Weld Formation:** The molten metal from the electrode and base metal combines to form a weld as it cools. The flux residue forms a slag layer on top of the weld, which is removed after cooling.

- **Applications:**
  - **Construction:** Widely used for welding structural steel and other large metal components.
  - **Manufacturing:** Common in various industries for steel welding and fabrications.
  - **Shipbuilding:** Effective for welding heavy and thick metal sections in ships and marine structures.

2.2 Submerged Arc Welding (SAW)

- **Working Principle:**
  - **Wire Feed:** A continuous wire electrode is fed through a welding gun. A granular flux is also fed onto the weld area.
  - **Arc Formation:** The electric arc forms between the wire electrode and the base metal, but it is submerged beneath a layer of flux.

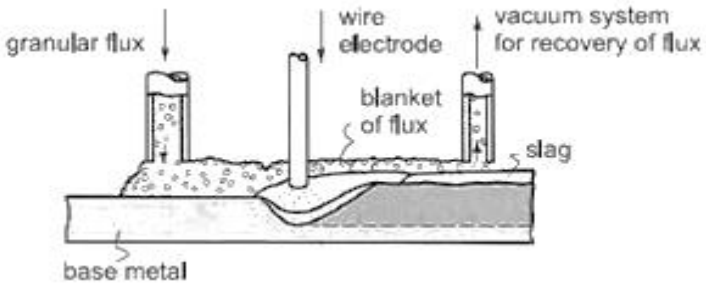

- **Heat Generation:** The flux melts and forms a protective slag over the weld pool, which keeps out contaminants and supports deep penetration welding.
- **Weld Formation:** The molten metal from the electrode and base metal solidifies under the flux layer.

- **Applications:**
- **Heavy Industry:** Ideal for welding thick sections in structural steel and heavy machinery.
- **Pipeline Construction:** Frequently used for welding long seams in pipelines.

2.3 Metal Inert Gas Welding (MIG) / Gas Metal Arc Welding (GMAW)

- **Working Principle:**
- **Wire Feed:** A consumable wire electrode is continuously fed through a welding gun. The process uses a shielding gas, such as argon or helium, to protect the weld from atmospheric contamination.
- **Arc Formation:** The electric arc forms between the wire electrode and the base metal. The arc melts the wire and the base metal.

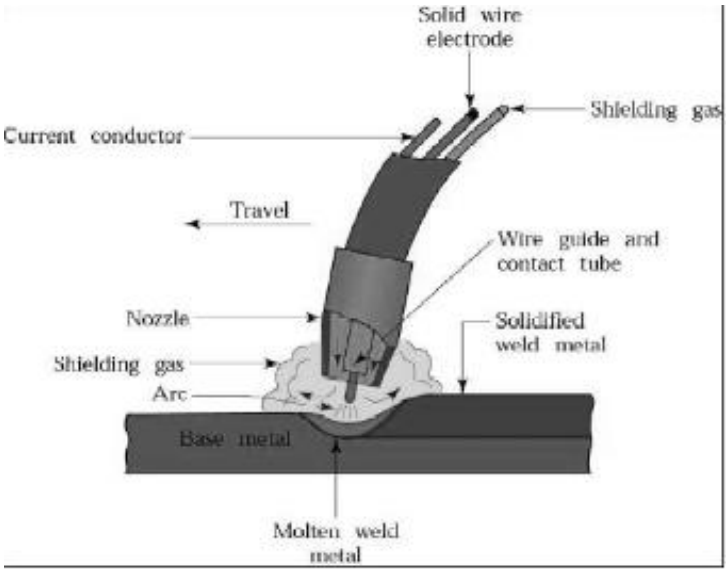

- **Heat Generation:** The molten metal from the wire and base metal forms a weld pool.
- **Weld Formation:** The weld pool solidifies into a continuous, strong weld.

- **Applications:**
- **Automotive Manufacturing:** Efficient for high-speed production of automotive parts.
- **Sheet Metal Fabrication:** Ideal for welding thin materials with minimal distortion.
- **General Manufacturing:** Versatile and used in various industries for different welding needs.

2.4 Tungsten Inert Gas Welding (TIG) / Gas Tungsten Arc Welding (GTAW)

- **Working Principle:**
- **Arc Formation:** A non-consumable tungsten electrode creates an electric arc with the workpiece. The welding area is protected by an inert gas, usually argon or helium, which shields the weld from contamination.
- **Heat Generation:** The arc generates intense heat, melting the base metal and, if used, a filler rod that is added separately.
- **Weld Formation:** The inert gas prevents oxidation and contamination of the molten weld pool, resulting in a clean and strong weld.

- **Applications:**
  - **Aerospace:** For high-precision welding of complex and thin components.
  - **Stainless Steel Fabrication:** Ideal for welding stainless steel and aluminum where appearance and weld strength are crucial.
  - **Medical Devices:** Used for precise welding of medical and surgical instruments.

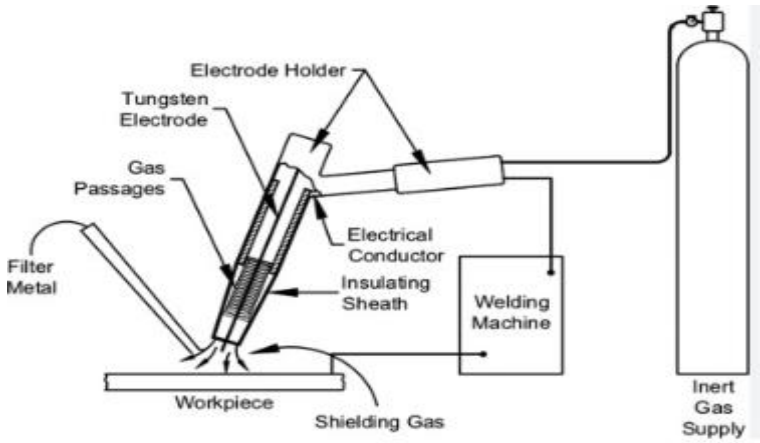

3. Resistance Welding

3.1 Spot Welding

- **Working Principle:**
  - **Electrode Contact:** Two copper electrodes are placed on either side of the metal sheets to be welded.
  - **Current Flow:** A high electric current is passed through the electrodes and the metal sheets, generating heat at the point of contact.
  - **Heat Generation:** The heat causes the metal at the contact point to melt, forming a weld nugget.
  - **Pressure Application:** Pressure from the electrodes holds the sheets together while the molten metal solidifies.

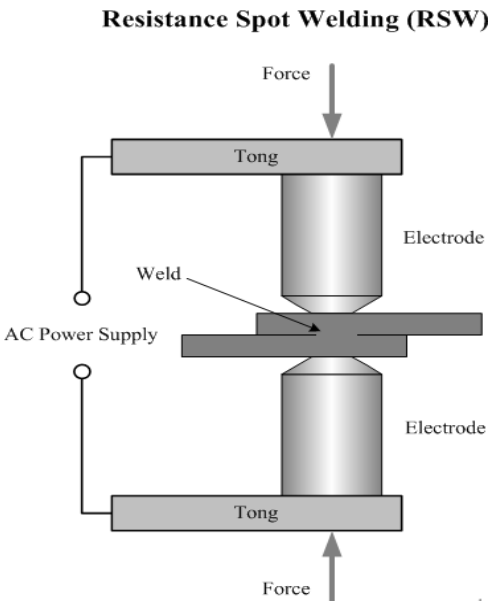

- **Applications:**
  - **Automotive Manufacturing:** Commonly used for welding car body panels and sheet metal components.
  - **Electronics:** Used for making electrical connections and welding small metal parts.

<u>Welding joints and it's different types</u>

Welding joints are crucial components in welding, where two or more pieces of metal or plastic are joined together. The choice of joint design affects the quality, strength, and cost of the weld. Here are key points about welding joints:

1. **Definition and Preparation**:
   - **Welding Joint**: The way pieces are assembled before welding. The metal to be welded is called the base metal, and if not metal, it's termed base material.

- **Preparation**: Edges are often machined, sheared, gouged, or cut to prepare for welding. Proper design and root openings are essential for handling loads and stresses.

2. **Types of Welding Joints**:

a) **<u>Butt Joint</u>**: A welding joint where two metal pieces are aligned in the same plane and joined by welding their edges. It is a widely used joint type in various fabrication and piping systems due to its simplicity and effectiveness.

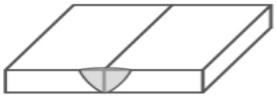

Types of Butt Joints

a) **Single Square Butt Joint**: Two flat pieces of metal are placed side by side without any beveling. Typically used for thinner materials (1/4" or less). Minimal preparation required.

b) **Single Bevel Butt Joint**: One piece is beveled, allowing the weld to penetrate deeper. Commonly used where access to both sides is limited, such as when welding beams to vertical columns.

c) **Double Bevel Butt Joint**: Both pieces are beveled. Allows welding from one side and cleaning the root pass from the other side. Useful for thicker materials and pipe sections.

d) **Single J Butt Joint**: One side of the joint is beveled in a J shape, suitable for welding pipes from one side, especially for pipes with a diameter of 24" NPS or less.

e) **Double J Butt Joint**: Both sides of the joint are beveled in a J shape. Requires precise machining and is used in specific applications where strong joints are needed.

f) **Single V Butt Joint**: One side of the joint is beveled to form a V shape. Commonly used for pipes and thicker sections when welding from one side.

g) **Double V Butt Joint**: Both pieces are beveled in a V shape, allowing for welding from both sides. Suitable for heavy sections and plates.

h) **Single U Butt Joint**: The edge of one piece is beveled to form a U shape. Used for thicker materials requiring deep penetration.

i) **Double U Butt Joint**: Both pieces are beveled in a U shape. Used in heavy-duty applications requiring strong welds and precise edge preparation.

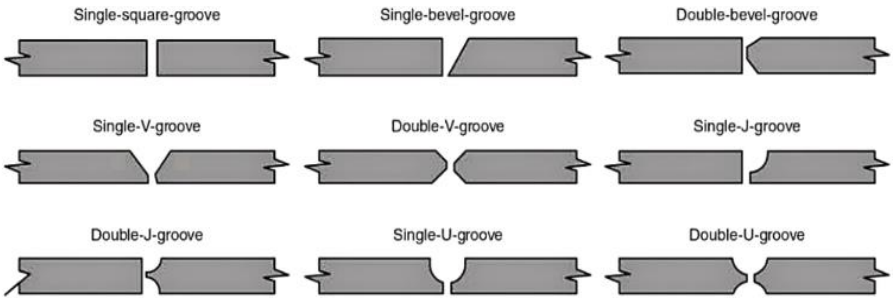

b) **<u>Tee Joint</u>**: A T-joint is a weld joint formed when two pieces of base metal intersect at an approximate 90° angle, creating a T shape. Unlike a corner joint, which is formed along the edges of both pieces, a T-joint is formed with the edge of one piece

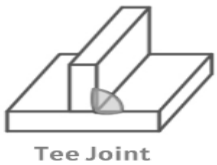

meeting the surface of the second piece.T-joints are commonly used in structural steel, tubing, and equipment manufacturing. They are versatile and can be welded in various positions including flat, horizontal, vertical, and overhead.

Types of Tee-Joints:

a) **Square T-Joints**:Utilizes fillet welds on one or both sides.

b) **Single Bevel T-Joints**:Features a bevel on one edge to improve stress distribution.

c) **Single-J T-Joints**: Includes a J-shaped groove, allowing welding from one side.

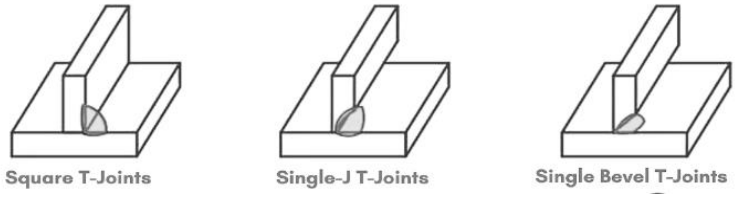

3. Corner Joint: **Definition**: A corner joint is formed when two pieces of metal are joined at an approximate right angle, creating an L-shaped configuration. It is commonly used in applications involving sheet metal and frames

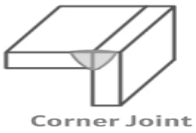

Types of corner joints:

a) **Flush Corner Joints**: Used for sheet metal up to 12 gauge. Provides moderate load support and is suitable for thin materials where deep penetration is difficult.

b) **Half-Open Corner Joints**: Adaptable for materials heavier than 12 gauge. Suitable for moderate loads and allows welding from one side with less burn-through risk.

c) **Full-Open Corner Joints**: Permits welding on both sides, suitable for heavy loads and all metal thicknesses. Offers good stress distribution.

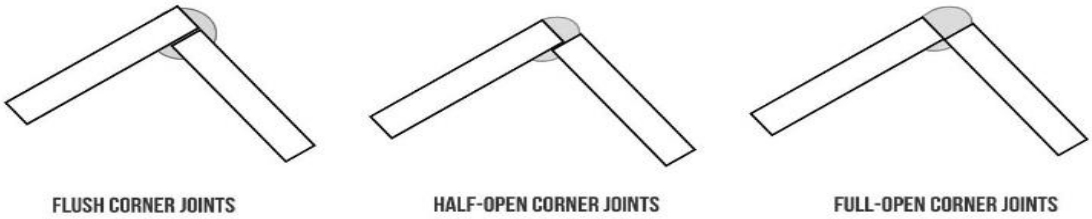

4. Lap Joint: A lap joint is a weld joint between two overlapping pieces of base metal positioned in parallel planes. The joint is characterized by the overlap of the metal edges, which forms a combined thickness approximately equal to the sum of both pieces. It is one of the strongest joints available, despite the lower unit strength of the filler metal used.

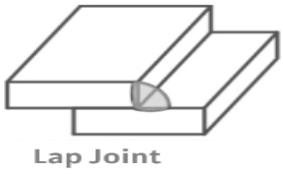

Types of Lap Joints:

a.) Single Fillet Lap Joint:

1. **Description**: Involves depositing filler metal along the seam on one side of the joint.
2. **Strength**: Suitable for metals up to ½ inch thick if the loading is not severe.

b.) Double Fillet Lap Joint:

- **Description**: Includes welding on both sides of the overlap, creating fillet welds on each side.
- **Strength**: Can withstand greater loads compared to a single fillet lap joint. Its strength can be comparable to that of the base metal when properly executed.

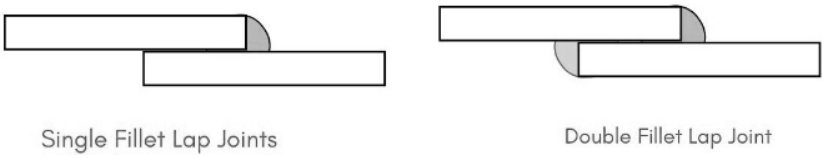

Gas Welding

Gas welding, also known as oxy-fuel welding, is a process where metals are joined together using heat generated from the combustion of fuel gases and oxygen. The most common fuel gases used are acetylene, propane, and hydrogen. This method was once the primary technique for welding metals but has since been largely supplanted by more modern techniques. Nonetheless, it remains popular for certain applications due to its simplicity and versatility.

Oxy-Acetylene Gas Welding

Oxy-acetylene welding is a specific type of gas welding where acetylene and oxygen are used to produce a high-temperature flame. This process is effective for welding a variety of metals, especially thin sections, and is also used for cutting metal with a specialized attachment. The oxy-acetylene torch allows for precise control over the flame, which can be adjusted to meet different welding needs.

Principle of Oxy-Acetylene Gas Welding

The principle behind oxy-acetylene welding involves burning acetylene and oxygen in a torch to generate a flame hot enough to melt metal. The heat from the flame causes the base metals to reach their melting points, allowing them to fuse together. A filler rod, if used, melts and fills the gap between the workpieces, forming a strong joint once cooled. Usage of type of filler material depends upon the metal that needs to be weld. For example, if we want to weld the mild steel metal, then we have to use the mild steel filler. Similarly, if we want to weld the aluminum metal, then we have to use the aluminum filler.

Working of Oxy-Acetylene Gas Welding

In this process:

- **Gas Storage**: Oxygen and acetylene are stored in separate high-pressure cylinders.
- **Regulation**: Regulators control the pressure of the gases as they leave the cylinders, reducing it to a safe and manageable level.
- **Hoses**: The gases are transported through flexible hoses to the torch.
- **Torch**: The gases mix in the torch's mixing chamber and exit through the nozzle as a flame. The flame's temperature and characteristics can be adjusted by controlling the gas flow.
- **Flame Application**: The welder directs the flame to melt the edges of the metals to be joined. Filler material may be added as needed.

Oxy-Acetylene Welding Equipment

1. Compressed Gas Cylinders

- Cylinders store gases like oxygen and acetylene under high pressure. Standard sizes are 6 to 7 m^3, with oxygen cylinders painted black and acetylene cylinders maroon.
- Oxygen cylinders are kept almost indefinitely and are tested every 5 years due to high pressure. Safety features include a special valve to handle pressure changes and a positive pressure maintained to identify the cylinder. Acetylene cylinders have safety plugs to release gas in case of fire.

2. Cylinder Valves

- Valves control the release of gas from cylinders. They consist of a stem operated by a hand wheel to open or close the cylinder.
- Made of brass to resist corrosion. Clean and free from oil or grease.
- Made of steel to avoid dangerous reactions with acetylene. Use clips for pressure regulators and require a special wrench.
- Valves should be covered with a protector cap during transport to prevent damage and accidental gas release. Cylinders should be securely fastened to avoid tipping.

3. Pressure Regulators

- Reduce cylinder gas pressure to the working pressure for welding.
- **Types**:
  - **Single-Stage Regulators**: Reduce pressure in one step but may require frequent readjustment.
  - **Two-Stage Regulators**: Reduce pressure in two steps, offering more stable control and requiring less adjustment.

4. Gas Hoses

- Reinforced rubber hoses transport gases from cylinders to the welding torch.
- **Colors**:
  - **Green** for oxygen
  - **Red** for acetylene
  - **Black** for other gases
- Hoses are available in various diameters and lengths. They are designed for specific pressures—up to 0.6 MPa for acetylene and 1.5 MPa for oxygen.

5. Welding Torches

- **To** mix fuel gas and oxygen to produce a flame for welding.
- **Types**:
  - **Positive Pressure Torches**: Require gases to be delivered at higher pressures. Both gases flow together in equal amounts.

- **Injector Torches**: Use a high-pressure oxygen flow to draw in fuel gas at lower pressure. This type maintains stable gas mixtures with lower acetylene pressure.
- Torches have mixing chambers to blend gases before ignition.

6. Torch Tips

- **It is** The part of the torch from which the gas mixture exits and ignites.
- **It is m**ade of copper alloys for good thermal conductivity.
- **Types**: Available as solid or two-piece tips. Sizes are determined by the orifice diameter, which depends on the metal type and thickness to be welded.

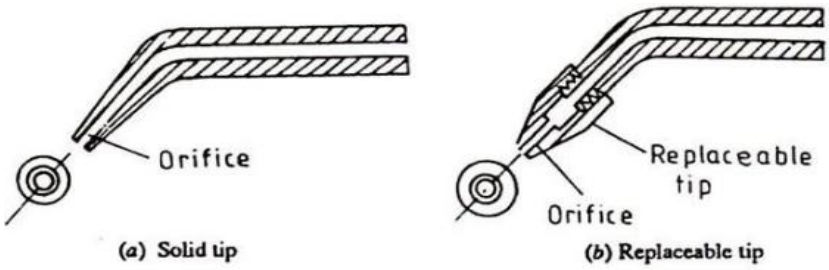

7. Tip Cleaner and Spark Lighter

- **Tip Cleaner**: Used to keep torch tips clean and clear. It consists of a wire with a roughened surface or a drill bit for removing blockages.
- **Spark Lighter**: Creates a spark to ignite the gas, typically consisting of a flint and steel mechanism.

Types of Flames

The quality of a weld is significantly influenced by the type of flame used in oxy-acetylene welding. There are three main types of flames: neutral, oxidizing, and carburizing. The oxy-acetylene flame is notable for its high temperature and controlled nature, allowing precise manipulation for effective melting of base metals without altering their chemical composition.

Understanding these flames is crucial for effective gas welding, as the right flame ensures proper joint formation and optimal weld quality. Oxy-acetylene welding remains popular due to its ability to reach temperatures up to 3200°C, making it versatile and effective for various industrial applications. The different types are discussed below:

Neutral Flame

1. **Composition**:
   - Achieved by mixing acetylene and oxygen in a 1:1 ratio.
2. **Flame Structure**:
   - **Inner Cone**: Bluish-white, with a temperature of approximately 3040°C to 3300°C.

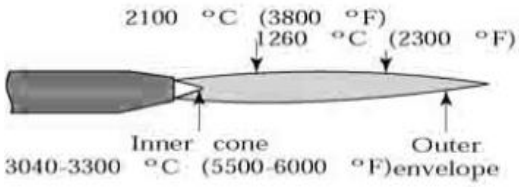

- **Outer Envelope**: Light blue, with a temperature of around 1260°C to 2100°C.

3. **Characteristics**:

- **Sound**: Produces a gentle hiss.
- **Combustion**: Complete combustion, ensuring no excess of either gas.

4. **Applications**:

- **Materials**: Ideal for welding mild steel, stainless steel, cast iron, copper, low carbon steel, and aluminium alloy.
- **Preheating**: The outer light blue envelope is used for preheating during cutting operations.

5. **Flame Adjustment**:

- **Process**: Start with an excess acetylene flame. Adjust by reducing acetylene or increasing oxygen until the feather (extended inner cone) disappears, achieving a neutral flame.

6. **Effects on Metal**:

- **Chemical Neutrality**: No chemical effect on the molten metal, ensuring clean welds without oxidation or carbon contamination.

<u>Oxidizing Flame</u>

1. **Composition**:

- Produced when slightly more than one volume of oxygen is mixed with one volume of acetylene.

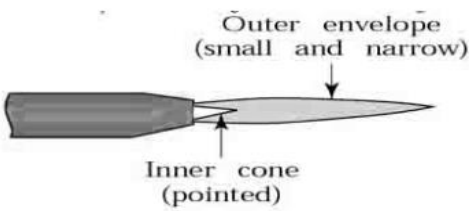

2. **Flame Structure**:

- **Inner Cone**: Pointed and slightly purple, shortened to about one-tenth of its original length.
- **Outer Envelope**: Blue, with a distinct roaring sound.

3. **Characteristics**:

- **Temperature**: Approximately 3482°C (6300°F) at the inner cone tip.
- **Sound**: Distinct hissing roar.

4. **Applications**:

- **Materials**: Commonly used for welding zinc, copper, manganese steel, brass, bronze alloy, and cast iron. Ferrous not used because oxygen combine with ferrous to form ferrous oxide.
- **Special Uses**: Slightly oxidizing flames for torch brazing of steel and cast iron; stronger oxidizing flames for welding brass or bronze.

5. **Effects on Metal**:

- **Oxidizing Effect**: Excess oxygen can cause oxidation and burning of the metal, making the weld porous, oxidized, and brittle. This flame should be avoided for welding steel.

6. **Flame Adjustment**:

- **Process**: Start with a neutral flame and increase the oxygen flow until the inner cone shortens and turns purple. The resulting flame will have a more pointed appearance with a distinct roar.

Carburizing (or Reducing) Flame

1. **Composition**:

- Produced when slightly less than one volume of oxygen is mixed with one volume of acetylene, resulting in excess acetylene.

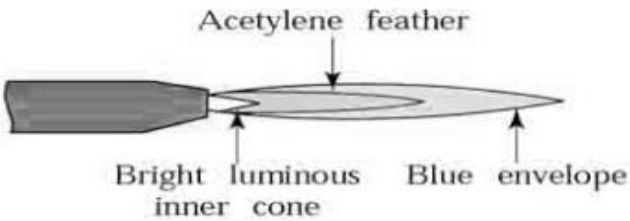

2. **Flame Structure**:

- **Inner Cone**: Luminous white, with a temperature of about 2900°C (5700°F) at the tip.
- **Intermediate Zone**: Red in colour with a temperature of about 1819°C. This is because of unburnt carbon.
- **Outer Envelope**: Blue.

3. **Characteristics**:

- **Sound**: Smoky and quiet.
- **Appearance**: Has a feathery edge extending beyond the inner cone, known as the acetylene feather.

4. **Applications**:

- **Materials**: Used for welding high carbon steels (HCS), cast iron, nickel based alloy and for processes like stelliting and flame cleaning.
- **Special Uses**: Welding lead, surface hardening, and for high carbon steels.

5. **Effects on Metal**:

- **Carburizing Effect**: Adds carbon to the weld metal, which can make the weld hard, brittle, and prone to cracking. This flame is not suitable for metals that are susceptible to carbon absorption.

6. **Flame Adjustment**:

- **Process**: Achieved by increasing the acetylene flow relative to oxygen, resulting in a longer acetylene feather. If the acetylene feather is twice as long as the inner cone it is known as a 2X flame, which is a way of expressing the amount of excess acetylene

Filler material used in oxy acetylene gas welding

In oxyacetylene welding, filler materials are crucial for creating strong and durable welds. These filler materials are chosen based on the type of metals being welded and the specific requirements of the weld. Types of filler materials used in oxyacetylene gas welding are discussed below

1. Rod Filler Materials

1. **Mild Steel Rods**

- **Composition**: Typically made from mild steel or low-carbon steel.

- **Usage**: Used for welding mild steel workpieces. The filler rod should have similar properties to the base metal to ensure a strong bond.
- **Application**: Common in general welding applications including repairs and fabrication of steel structures.

2. **Stainless Steel Rods**

- **Composition**: Made from stainless steel, often with a composition similar to the stainless steel being welded.
- **Usage**: Used for welding stainless steel. They help maintain the corrosion resistance and mechanical properties of the weld.
- **Application**: Used in industries where corrosion resistance is critical, such as in food processing, pharmaceuticals, and marine environments.

3. **Aluminum Rods**

- **Composition**: Made from aluminum or aluminum alloys.
- **Usage**: Used for welding aluminum and its alloys. Aluminum rods are usually coated with a flux to prevent oxidation.
- **Application**: Common in automotive, aerospace, and construction applications where aluminum is used.

4. **Bronze Rods**

- **Composition**: Made from bronze alloys, often containing copper and tin.
- **Usage**: Used for welding copper and its alloys, as well as for joining dissimilar metals.
- **Application**: Used in applications requiring high strength and corrosion resistance, such as marine and industrial applications.

2. Flux-Cored Filler Materials

1. **Flux-Cored Rods**

- **Composition**: These rods are similar to solid filler rods but contain a flux core that provides additional protection against oxidation.
- **Usage**: Used for welding metals where extra protection from contamination is needed.
- **Application**: Commonly used in welding processes that require a high degree of control over the weld quality.

3. Specialized Filler Materials

1. **Silver Solder Rods**

- **Composition**: Contain silver along with other metals like copper and zinc.
- **Usage**: Used for welding or brazing metals where a high strength joint with low melting point is needed.
- **Application**: Often used for joining precious metals, electronics, and in jewelry making.

2. **Nickel Rods**

- **Composition**: Made from nickel or nickel alloys.
- **Usage**: Used for welding high-temperature alloys and in applications requiring high corrosion resistance.
- **Application**: Common in aerospace and high-temperature applications.

4. Coated Filler Materials

1. **Coated Rods**

- **Composition**: These rods are coated with a flux or protective coating.
- **Usage**: The coating helps to protect the weld area from contaminants and oxidation during welding.
- **Application**: Used to improve the quality and appearance of the weld.

Selection Criteria

- **Base Metal Compatibility**: The filler material should match or complement the base metal in terms of composition and properties.
- **Weld Strength**: The filler material should provide adequate strength and durability to the weld.
- **Corrosion Resistance**: Depending on the application, the filler material should have suitable resistance to corrosion or other environmental factors.

Advantages of Oxy-Acetylene Welding

- **Simple Equipment**: The setup is relatively straightforward and does not require complex machinery.
- **Portability**: The equipment is lightweight and can be easily transported to different job sites.
- **Versatility**: Can be used for both welding and cutting. The flame's intensity can be adjusted to suit different materials.
- **Cost-Effective**: Generally less expensive than other welding techniques.

Disadvantages of Oxy-Acetylene Welding

- **Lower Flame Temperature**: Compared to electric arc welding, oxy-acetylene welding generates a lower maximum temperature, making it less effective for thick materials.
- **Limited to Thin Materials**: Best suited for thin and medium-thickness metals; not ideal for very thick materials.
- **No High Flux Shielding**: Unlike some other welding methods, there is minimal protection from atmospheric contamination.

Applications of Gas Welding

- **Industries**: Commonly used in automotive repair, metalworking, and construction for tasks such as welding and cutting.
- **Sheet Metal Work**: Effective for joining thin sheets of metal.
- **Repair Work**: Used for repairing and fabricating metal components, especially where precision and control are needed.

Precautions for Gas Welding Process

- **Handling of Torches**: Never leave a burning torch unattended or set it down on a work surface while still ignited.
- **Clamping Workpieces**: Always clamp the workpieces to ensure stability and prevent accidents.
- **Cylinder Storage**: Store gas cylinders in a well-ventilated area away from heat sources.
- **Hose Maintenance**: Keep hoses clean and free from damage to avoid leaks.
- **Leak Checks**: Regularly inspect equipment for leaks and ensure all connections are secure.
- **Post-Operation**: Turn off the gas supply and safely store equipment after use.

Arc Welding

Arc welding is a fusion welding process where an electric arc is used to generate intense heat to melt and fuse metals at the joint. This process involves creating an arc between an electrode and the workpiece to form a weld pool.

Working Principle

1. **Electric Arc Formation**: When the electrode comes into contact with the workpiece, an electrical circuit is established. As the electrode is lifted away, the current flows through the air gap, ionizing the air and creating a sustained arc.
2. **Heat Generation**: The arc temperature can reach up to 7,000°F (3,870°C), sufficient to melt most metals.
3. **Metal Fusion**: The heat melts the base metal and any filler material, which then solidifies to form a strong joint as it cools.
4. **Shielding**: Various methods protect the molten metal from atmospheric gases, such as using inert gases or fluxes to prevent contamination.

Arc Welding tools

1. Electrode

- **Definition**: A rod or wire that conducts electric current to the workpiece, creating an arc for welding.
- **Types**:
  - **Consumable Electrodes**: Melt and become part of the weld (e.g., MIG wire, stick electrodes).
  - **Non-consumable Electrodes**: Do not melt and are used to maintain the arc (e.g., tungsten electrodes in TIG welding).
- **Uses**: Provides the filler material and stabilizes the arc.
- **Applications**: Used in various welding processes such as MIG, TIG, and stick welding.

2. Electrode Holder

- **Definition**: A clamp used to hold the electrode in place and conduct electrical current.

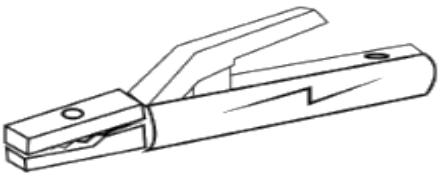

- **Types**:
  - **Manual Holders**: Handheld and adjustable for different electrode sizes.
  - **Automatic Holders**: Used in automated welding setups.
- **Uses**: Holds the electrode securely and transfers the welding current to it.
- **Applications**: Essential in stick welding (SMAW) to maintain electrode position and arc stability.

3. Flux

- **Definition**: A material used to protect the weld area from contaminants and to aid in the formation of a stable weld.
- **Types**:
  - **Shielding Flux**: Used in processes like flux-cored arc welding (FCAW) to shield the weld pool.
  - **Deslagging Flux**: Helps remove slag and impurities from the weld bead.
- **Uses**: Prevents oxidation and contamination of the weld, and helps improve weld quality.
- **Applications**: Utilized in various welding processes, including FCAW and submerged arc welding (SAW).

4. Eye Shield

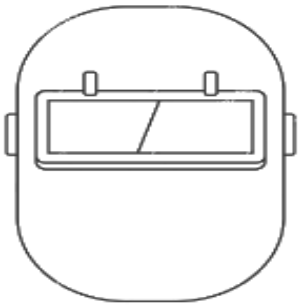

- **Definition**: Protective gear designed to shield the eyes from intense light, heat, and flying debris during welding.
- **Types**:
  - **Fixed Shade Shields**: Have a single, non-adjustable shade.
  - **Auto-Darkening Shields**: Automatically adjust the shade based on the welding arc brightness.
- **Uses**: Protects eyes from harmful UV/IR radiation and bright flashes.
- **Applications**: Used in all welding processes to ensure eye safety.

5. Chipping Hammer

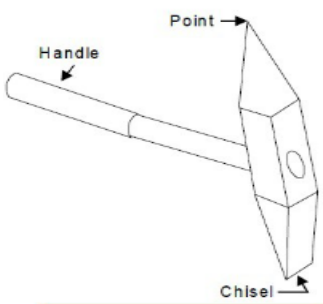

- **Definition**: A hand tool used to remove slag and spatter from the weld area.
- **Types**:
  - **Standard Chipping Hammer**: Features a pointed end for chipping and a flat end for scraping.
  - **Heavy-Duty Chipping Hammer**: Designed for more rigorous slag removal tasks.
- **Uses**: Cleans the weld area and prepares it for inspection or further welding.
- **Applications**: Commonly used in stick welding and other processes where slag removal is necessary.

6. Wire Brush

- **Definition**: A tool with wire bristles used for cleaning metal surfaces and removing rust or slag.
- **Types**:
  - **Handheld Wire Brushes**: Manual brushes for small cleaning tasks.
  - **Power Wire Brushes**: Attachments for drills or grinders for more extensive cleaning.

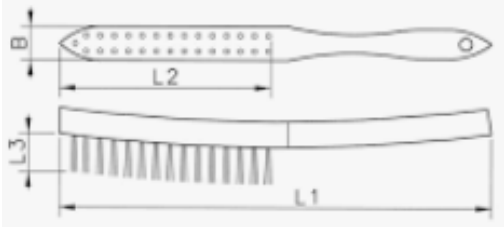

- **Uses**: Prepares metal surfaces for welding and cleans welds after completion.
- **Applications**: Essential for surface preparation in all types of welding processes.

7. Gloves

- **Definition**: Protective wear designed to shield hands from heat, sparks, and sharp edges.
- **Types**:
  - **Leather Gloves**: Provide heat resistance and durability.
  - **Heat-Resistant Gloves**: Made from materials that withstand high temperatures.
- **Uses**: Protects hands from burns, electrical shocks, and abrasions.
- **Applications**: Worn during all welding processes to ensure hand safety.

<u>Advantages and Disadvantages of Arc Welding</u>

- **Advantages**: a) Versatility: Capable of welding a wide variety of metals and thicknesses, suitable for numerous applications. b) Portability: Equipment can be relatively portable, allowing for on-site welding. c) Cost-Effectiveness: Efficient for many industrial applications, often requiring less investment than other welding technologies.
- **Disadvantages**: a) Skill Requirement: Requires skilled operators to produce high-quality welds, particularly for processes like GTAW. b) Health Hazards: Produces fumes, UV radiation, and requires appropriate ventilation and protective measures. c) Welding Defects: Risks of defects such as porosity, slag inclusion, and cracks if not properly executed.

<u>Applications of Arc Welding</u>

- **Automotive Manufacturing and Repair**: a) Used for welding body panels, frames, exhaust systems, and other components. b) Provides flexibility and speed in mass production and maintenance.
- **Construction of Steel Structures**: a) Essential for fabricating buildings, bridges, and other large infrastructure projects. b) Provides strong, durable welds capable of withstanding high loads.
- **Shipbuilding and Offshore Construction**: a) Used in constructing ships, oil rigs, and marine structures for its reliability and strength. b) Capable of producing watertight, corrosion-resistant welds.

- **Fabrication of Heavy Machinery and Equipment**: a) Critical for producing industrial machines, cranes, and agricultural equipment. b) Provides robustness and long-lasting joints required for heavy-duty applications.
- **Aerospace and Aviation**: a) Used for precision welding of thin materials and critical components. b) Provides the high-quality, defect-free welds necessary for safety and performance.

SECOND CLASS

Aim of Job,

Job drawing,

Tools Used,

Operations involved,

Procedure