23

Reaction Turbines

1. Introduction. 2. Parson's Reaction Turbine. 3. Pressure and Velocity in a Reaction Turbine. 4. Comparison between Impulse Turbine and Reaction Turbine. 5. Velocity Triangles for Moving Blades of a Reaction Turbine. 6. Combined Velocity Triangle for Moving Blades. 7. Power Produced by a Reaction Turbine. 8. Degree of Reaction. 9. Height of Blades of a Reaction Turbine.

23.1. Introduction

In a reaction turbine, the steam enters the wheel under pressure and flows over the blades. The steam, while gliding, propels the blades and make them to move. As a matter of fact, the turbine runner is rotated by the reactive forces of steam jets. The backward motion of the blades is similar to the recoil of a gun. It may be noted that an absolute reaction turbine is rarely used in actual practice.

23.2. Parson's Reaction Turbine

A *Parson's turbine is the simplest type of reaction steam turbine, and is commonly used. It has the following main components :

1. *Casing.* It is an air-tight metallic case, in which the steam from the boiler, under a high pressure and temperature, is distributed around the fixed blades (guide mechanism) in the casing. The casing is designed in such a way that the steam enters the fixed blades with a uniform velocity.

2. *Guide mechanism.* It is a mechanism, made up with the help of guide blades, in the form of a wheel. This wheel is, generally, fixed to the casing; that is why these guide blades are also called fixed blades. The guide blades are properly designed in order to :

(*a*) allow the steam to enter the runner without shock. This is done by keeping the relative velocity at inlet of the runner tangential to the blade angle.

(*b*) allow the required quantity of steam to enter the turbine. This is done by adjusting the openings of the blades.

The guide blades may be opened or closed by rotating the regulating shaft, thus allowing the steam to flow according to the need. The regulating shaft is operated by means of a governor whose function is to govern the turbine (*i.e.* to keep to speed constant at varying loads).

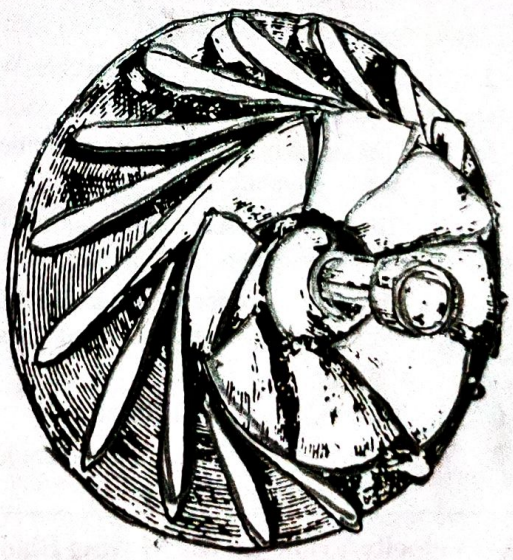

Fig. 23.1. Turbine runner.

* A Parson's turbine is also known as 50% reaction turbine. (See Art. 23.8)

3. *Turbine runner.* The turbine runner of a Parson's reaction turbine essentially consists of runner blades fixed to a shaft or rings, depending upon the type of turbine. The blades, fixed to the runner, are properly designed in order to allow the steam to enter and leave the runner without shock, as shown in Fig. 23.1.

The surface of the turbine runner is made very smooth to minimise the frictional losses. The turbine runner is, generally, cast in one piece. But sometimes, it is made up of separate steel plates welded together.

4. *Draft tube.* The steam, after passing through the runner, flows into the condenser through a tube called draft tube. It may be noted that if this tube is not provided in the turbine, then the steam will move freely and will cause steam eddies.

23.3. Pressure and Velocity of Steam in a Reaction Turbine

It will be interesting to know that the pressure in a reaction turbine is reduced in the fixed blades as well as in moving blades. The velocity of steam is increased in the fixed blades, and is reduced while passing through the moving blades.

Fig. 23.2 shows the pressure and velocity graphs of the steam while it flows in the fixed and moving blades of a reaction turbine. The pressure graph 1-2-3-4 represents steam pressure at entrance of the fixed blades, exit of the fixed blades, entrance of the moving blades and exit of the moving blades respectively. Similarly, velocity graph 5-6-7-8 represents the velocity of steam at entrance of the fixed blades, exit of the fixed blades, entrance of the moving blades and exit of the moving blades respectively.

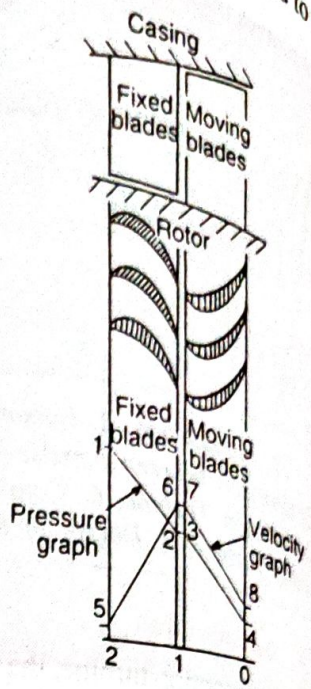

Fig. 23.2. Pressure and velocity graphs of a reaction turbine.

23.4. Comparison between Impulse Turbine and Reaction Turbine

Following are the few points of comparison between an impulse turbine and a reaction turbine :

S. No.	*Impulse turbine*	*Reaction turbine*
1.	The steam flows through the nozzles and impinges on the moving blades.	The steam flows first through guide mechanism and then through the moving blades.
2.	The steam impinges on the buckets with kinetic energy.	The steam glides over the moving vanes with pressure and kinetic energy.
3.	The steam may or may not be admitted over the whole circumference.	The steam must be admitted over the whole circumference.
4.	The steam pressure remains constant during its flow through the moving blades.	The steam pressure is reduced during its flow through the moving blades.
5.	The relative velocity of steam while gliding over the blades remains constant (assuming no friction).	The relative velocity of steam while gliding over the moving blades increases (assuming no friction).
6.	The blades are symmetrical.	The blades are not symmetrical.
7.	The number of stages required are less for the same power developed.	The number of stages required are more for the same power developed.

23.5. Velocity Triangles for Moving Blades of a Reaction Turbine

We have already discussed that in a reaction turbine, the steam enters at one end (say *C*) of the moving blades from the guide mechanism. The jet then glides over the inside surface of the blades and finally leaves from the other edge (say *D*), as shown in Fig. 23.3. It may be noted that the jet enters and leaves the blades tangentially for shockless entry and exit.

Consider steam, in the form of a jet, entering the curved blade (after leaving the fixed blade) at C. Let the jet glides over the inside surface and leaves the blade at D, as shown in Fig. 23.3. Now let us draw the velocity triangles at inlet and outlet tips of the moving blade, as shown in Fig. 23.3.

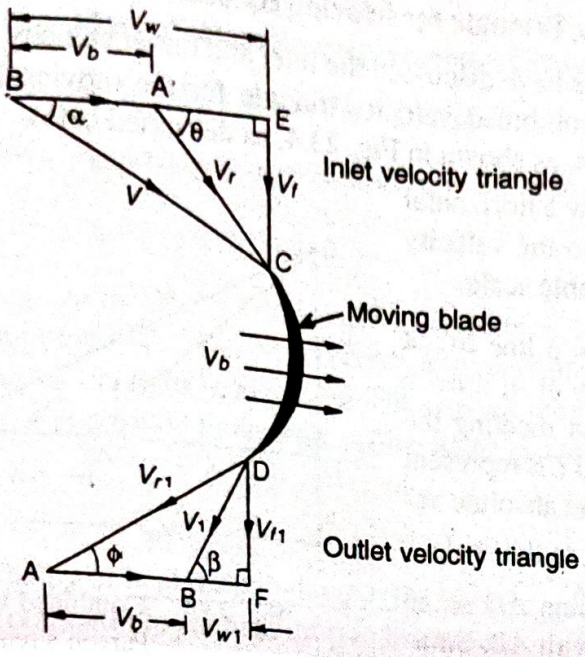

Fig. 23.3. Velocity triangles for a reaction turbine.

Let V_b = Linear velocity of the moving blade (*AB*).

V = Absolute velocity of steam entering the moving blade (*BC*).

V_r = Relative velocity of jet to the moving blade (*AC*). It is the vectorial difference of V_b and V.

V_f = Velocity of flow at entrance (*EC*). It is the vertical component of V.

V_w = Velocity of whirl at entrance (*BE*). It is the horizontal component of V.

α = Angle with the direction of motion of the blade at which the steam enters the blade.

θ = Angle which the relative velocity of jet (V_r) makes with the direction of motion of the blade.

$V_1, V_{r1}, V_{f1}, V_{w1}, \beta, \phi$ = Corresponding values at exit of the moving blade.

It may be seen, from the above, that original notations (*i.e.* V, V_r, V_f, V_w) stand for inlet triangle. The notations with suffix 1 (*i.e.* $V_1, V_{r1}, V_{f1}, V_{w1}$) stand for outlet triangle. It may be noted that as the steam enters and leaves the blades without any shock (or in other words tangentially), therefore shape of the blades will be such that V_r and V_{r1} will be along the tangents to the blades at inlet and outlet respectively.

The steam jet enters the blades along *BC* with a velocity (V) at an angle α with the direction of motion of the blade. The axial component of V (*i.e. CE*) which does no work on the blade, is known as *velocity of flow* (V_f). It causes the steam to flow through the blade and also an axial thrust on the rotor. The linear velocity or mean velocity of the blades (V_b) is represented by *AB* in magnitude and direction. The length *AC* represents the relative velocity (V_r) of the steam with respect to the blade. The jet now glides over and leaves the blade with a relative velocity (V_{r1}) which is represented by *DA*. The absolute velocity of jet (V_1) as it leaves the blade is represented by *DB* inclined at an angle

β with the direction of blade motion. The tangential component of V_1 (represented by *BF*) is known as *velocity of whirl* at exit (V_{w1}). The axial component of V_1 (represented by *DF*) is known as *velocity of flow* at exit (V_{f1}).

Note : The inlet triangle of velocities is represented by *BEC* whereas the outlet triangle by *AFD*.

23.6. Combined Velocity Triangle for Moving Blades

In the last article, we have discussed the inlet and outlet velocity triangles separately. For the sake of simplification, a combined velocity triangle for the moving blade is drawn, for solving problems on steam turbines, as shown in Fig. 23.4, as discussed below :

1. First of all, draw a horizontal line and cut off *AB* equal to the velocity of blade (V_b), to some suitable scale.

2. Now at *B*, draw a line *BC* at angle α with *AB*. Similarly at *A*, draw a line *AC* at angle θ with *EA* meeting the first line at *C*. Now *CA* and *CB* represent the relative velocity (V_r) and absolute velocity (*V*) of steam at inlet, to the scale.

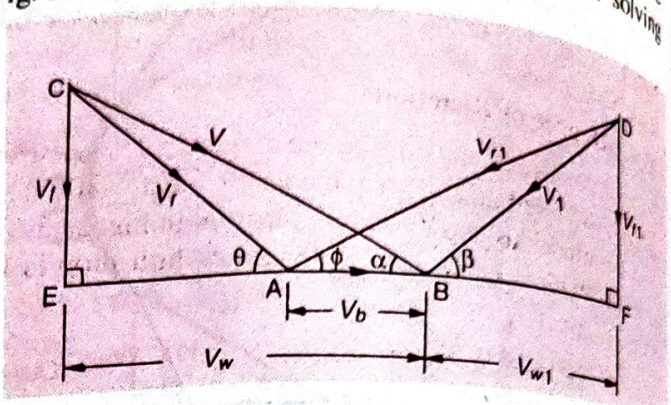

Fig. 23.4. Combined velocity triangle for a Parson's reaction turbine.

3. At *A*, draw a line *AD* at an angle φ (such that φ = α) with *AB*. Similarly at *B* draw a line *BD* at an angle β (such that β = θ) with *AB* meeting the first line at *D*. Now *DA* and *DB* represent the relative velocity (V_{r1}) and absolute velocity (V_1) of steam at outlet, to the scale.

4. From *C* and *D* draw perpendiculars meeting the line *AB* produced at *E* and *F*.

5. Now *EB* and *CE* represent the velocity of whirl and velocity of flow at inlet (V_w and V_f) to the scale. Similarly *BF* and *DF* represent the velocity of whirl and velocity of flow at outlet (V_{w1} and V_{f1}), to the scale.

Note : A careful study of the combined velocity diagram of Parson's reaction turbine will reveal that it is symmetrical about the central line. Therefore following relations exist in the combined velocity diagram :

$$V_f = V_{f1} \; ; \; V = V_{r1} \; ; \; V_r = V_1 \; ; \; EA = BF$$

23.7. Power Produced by a Reaction Turbine

Consider a reaction turbine working under the action of steam pressure. Let us draw a combined velocity triangle for the reaction turbine, as shown in Fig. 23.4.

Let m = Mass of the steam flowing through the turbine in kg/s, and

$(V_w + V_{w1})$ = Change in the velocity of whirl in m/s.

We know that according to the Newton's second law of motion, force in the direction of motion of the blades,

$$F_X = \text{Mass of steam flowing/second} \times \text{Change in the velocity of whirl} \quad \ldots (i)$$

$$m\,[V_w - (-V_{w1})] = m\,[V_w + V_{w1}] = m \times EF \text{ N}$$

and work done in the direction of motion of the blades

$$= \text{Force} \times \text{Distance} = {}^{*}m\,(V_w + V_{w1})\,V_b = m \times EF \times AB \text{ N-m/s} \quad \ldots (ii)$$

Workdone per kg of steam = $V_b\,(2\,V \cos\alpha - V_b)$ ... Refer Chapter 24 Art. 24.4, page 548.

∴ Power produced by the turbine,

$$P = m\,(V_w + V_{w1})\,V_b \text{ watts} \qquad \ldots (\because 1 \text{ N-m/s} = 1 \text{ watt})$$

Similarly, we can find out the axial thrust on the wheel, which is due to difference of velocities of flow at inlet and outlet. Mathematically, axial thrust,

$$F_Y = \text{Mass of steam flowing /second} \times \text{Change in the velocity of flow}$$

$$= m\,(V_f - V_{f1}) = m\,(CE - DF) \text{ N} \qquad \ldots (iii)$$

Note : In equation (*i*), the value of V_{w1} is taken as *negative* because of the opposite direction of V_w with respect to the blade motion.

23.8. Degree of Reaction

We have already discussed in Art. 23.3 that in a reaction turbine, the pressure drop takes place in both the fixed and moving blades. In other words, there is an enthalpy drop in both the fixed and moving blades as shown on *h-s* diagram in Fig. 23.5. The ratio of the enthalpy or heat drop in the moving blades to the total enthalpy or heat drop in the stage is known as *degree of reaction.* Mathematically,

Degree of reaction

$$= \frac{\text{Enthalpy or heat drop in the moving blades}}{\text{Total enthalpy or heat drop in the stage}} = \frac{h_2 - h_3}{h_1 - h_3}$$

The enthalpy drop in the fixed blades per kg of steam is given by

$$h_1 - h_2 = \frac{V^2 - V_1^2}{2000} \text{ kJ/kg}$$

and enthalpy drop in the moving blades,

$$h_2 - h_3 = \frac{V_{r1}^2 - V_r^2}{2000} \text{ kJ/kg}$$

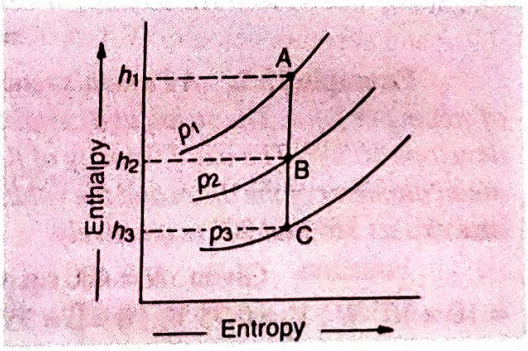

Fig. 23.5. Degree of reaction.

∴ Total enthalpy drop in the stage,

$$h_1 - h_3 = (h_1 - h_2) + (h_2 - h_3)$$

$$= \frac{V^2 - V_1^2}{2000} + \frac{V_{r1}^2 - V_r^2}{2000} = \frac{2\,(V_{r1}^2 - V_r^2)}{2000} = 2\,(h_2 - h_3) \text{ kJ/kg}$$

$\ldots (\because$ For Parson's reaction turbine, $V = V_{r1}$ and $V_1 = V_r)$

We know that degree of reaction

$$= \frac{h_2 - h_3}{h_1 - h_3} = \frac{h_2 - h_3}{2\,(h_2 - h_3)} = \frac{1}{2} = 0.5 \text{ or } 50\%$$

Thus we see that a Parson's reaction turbine is a 50 percent reaction turbine.

Example 23.1. *In one stage of a reaction steam turbine, both the fixed and moving blades have inlet and outlet blade tip angles of 35° and 20° respectively. The mean blade speed is 80 m/s and the steam consumption is 22 500 kg per hour. Determine the power developed in the pair, if the isentropic heat drop for the pair is 23.5 kJ per kg.*

Solution. Given : $\theta = \beta = 35°$; $\phi = \alpha = 20°$; $V_b = 80$ m/s ; $m = 22\,500$ kg/h = 6.25 kg/s ; *$h_d = 23.5$ kJ/kg

Now let us draw the combined velocity triangle, as shown in Fig. 23.6, as discussed below.

1. First of all, draw a horizontal line and cut off AB equal to 80 m/s (V_b) to some suitable scale.

2. Now at B, draw a line BC at an angle $\alpha = 20°$, with AB. Similarly, at A draw a line AC at an angle $\theta = 35°$ with BA meeting the first line at C.

3. At A, draw a line AD at angle $\phi = 20°$ (because $\phi = \alpha$) with AB. Similarly, at B draw a line BD at an angle $\beta = 35°$ (because $\beta = \theta$) with AB meeting the first line at D.

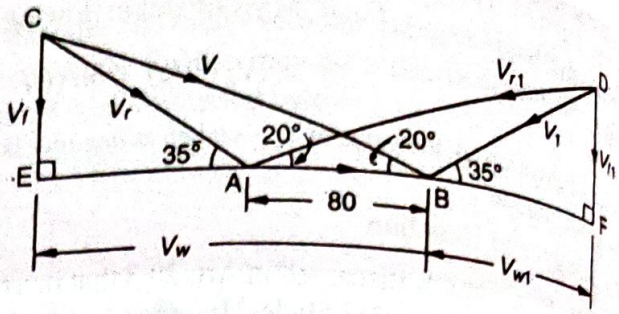

Fig. 23.6

4. From C and D draw perpendiculars meeting the line AB produced at E and F.

By **measurement, we find that the change in the velocity of whirl,

$$(V_w + V_{w1}) = 235 \text{ m/s}$$

We know that power developed in the pair,

$$P = m\,(V_w + V_{w1})\,V_b = 6.25 \times 235 \times 80 = 117\,500 \text{ W}$$

$$= 117.5 \text{ kW} \quad \textbf{Ans.}$$

Example 23.2. *A Parson's reaction turbine, while running at 400 r.p.m. consumes 30 tonnes of steam per hour. The steam at a certain stage is at 1.6 bar with dryness fraction of 0.9 and the stage develops 10 kW. The axial velocity of flow is constant and equal to 0.75 of the blade velocity. Find mean diameter of the drum and the volume of steam flowing per second. Take blade tip angles at inlet and exit as 35° and 20° respectively.*

Solution. Given : $N = 400$ r.p.m. ; $m = 30$ t/h = 8.33 kg/s ; $p = 1.6$ bar ; $x = 0.9$; $P = 10$ kW $= 10 \times 10^3$ W ; $V_f = 0.75\,V_b$; $\theta = \beta = 35°$; $\phi = \alpha = 20°$

---

* Superfluous data

** This value may also be found out from the geometry of the velocity diagram as discussed below :

$$V_f = V \sin 20° = 0.3240\,V$$

Similarly, $$V_f = V_r \sin 35° = 0.5736\,V_r$$

$\therefore$ $$0.3240\,V = 0.5736\,V_r \quad \text{or} \quad V = 1.77\,V_r$$

$$V_w = V \cos 20° = 0.9397\,V$$

Similarly, $$V_w = V_r \cos 35° + 80 = 0.8192\,V_r + 80$$

$\therefore$ $$0.9397\,V = 0.8192\,V_r + 80$$

or $$0.9397\,(1.77\,V_r) = 0.8192\,V_r + 80$$

$\therefore$ $$1.663\,V_r = 0.8192\,V_r + 80$$

$$0.8438\,V_r = 80 \quad \text{or} \quad V_r = 94.8 \text{ m/s}$$

and $$EA = V_r \cos 35° = 94.8 \times 0.8192 = 77.7$$

$\therefore$ $$(V_w + V_{w1}) = EA + AB + BF = 77.7 + 80 + 77.7 = 235.4 \text{ m/s}$$

Mean diameter of the drum

Let D = Mean diameter of the durm.

Now let us draw the combined velocity triangle, as shown in Fig. 23.7, as discussed below :

1. First of all, draw a horizontal line and cut off AB equal to 25 mm to represent the blade velocity (which is required to be found out).
2. Now at B, draw a line BC at an angle $\alpha = 20°$ with AB. Similarly at A, draw a line AC at an angle $\theta = 35°$ meeting the first line at C.
3. At A, draw a line AD at an angle $\phi = 20°$ with AB. Similarly at B, draw a line BD at an angle $\beta = 35°$ with AB meeting the first line at D.
4. From C and D draw perpendiculars meeting the line AB produced at E and F.

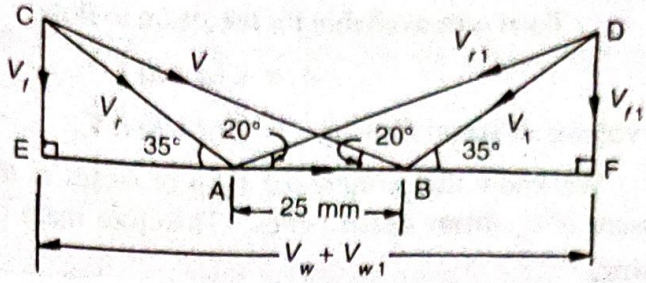

Fig. 23.7

By *measurement, we find that the change in the velocity of whirl,

$$(V_w + V_{w1}) = 73.5 \text{ mm}$$

$$\therefore \quad \frac{(V_w + V_{w1})}{V_b} = \frac{73.5}{25} = 2.94$$

$$\text{or} \quad (V_w + V_{w1}) = 2.94\, V_b$$

We know that the power developed (P),

$$10 \times 10^3 = m\,(V_w + V_{w1})\, V_b = 8.33 \times 2.94\, V_b \times V_b = 24.49 (V_b)^2$$

$$\therefore \quad (V_b)^2 = 408.3 \text{ or } V_b = 20.2 \text{ m/s}$$

We know that the blade velocity (V_b),

$$20.2 = \frac{\pi D N}{60} = \frac{\pi D \times 400}{60} = 20.94\, D$$

$$\therefore \quad D = 0.965 \text{ m} = 965 \text{ mm} \quad \textbf{Ans.}$$

Volume of steam flowing per second

From steam tables, corresponding to a pressure of 1.6 bar, we find that specific volume of steam,

$$v_g = 1.091 \text{ m}^3/\text{kg}$$

∴ Volume of steam flowing per second

$$= m \times v_g = 8.33 \times 0.9 \times 1.091 = 8.18 \text{ m}^3/\text{s} \quad \textbf{Ans.}$$

23.9. Height of Blades of a Reaction Turbine

We have already discussed that in a reaction turbine, the steam enters the moving blades over the whole circumference. As a result of this, the area through which the steam flows is always full of steam. Now consider a reaction turbine whose end view of the blade ring in shown in Fig. 23.8.

---

* It may also be found out analytically in the same way as in the last example. Since the blade angles in this example as well as in the last example are same, therefore

$$(V_w + V_{w1}) = \frac{235.4}{80} \times 25 = 73.56 \text{ mm}$$

Let d = Diameter of rotor drum,

* h = Height of blades, and

V_{f1} = Velocity of flow at exit.

∴ Total area available for the steam to flow,

$$A = \pi (d + h) h$$

and volume of steam flowing $= \pi (d + h) h V_{f1}$

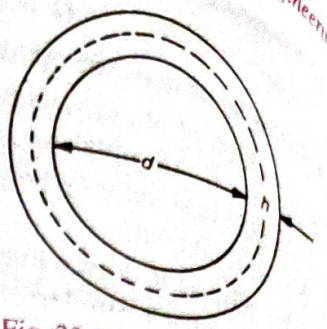

Fig. 23.8. Height of blades for reaction turbines.

We know that volume of 1 kg of steam at the given pressure is v_g (from steam tables). Therefore mass of steam flowing,

$$m = \frac{\pi (d + h) h V_{f1}}{v_g} \text{ kg/s}$$

If the steam has a dryness fraction of x, then mass of steam flowing,

$$m = \frac{\pi (d + h) h V_{f1}}{x v_g} = \frac{\pi d_m h V_{f1}}{x v_g} \text{ kg/s}$$

where d_m is the mean blade diameter and is equal to $(d + h)$.

Note : In most of the reaction turbines, the velocity of flow is constant at inlet and outlet (*i.e.* $V_f = V_{f1}$). Therefore, we can use the value of V_f instead of V_{f1} in the above relation.

Example 23.3. *In a reaction turbine, the blade tips are inclined at 35° and 20° in direction of motion. The guide blades are of the same shape as the moving blades, but reversed in direction. At a certain place in the turbine, the drum diameter is 1 metre and the blades are 100 mm high. At this place, steam has a pressure of 1.7 bar and dryness 0.935. If the speed of the turbine is 250 r.p.m. and the steam passes through the blades without shock, find the mass of steam flow and the power developed in the ring of the moving blades.*

Solution. Given : $\theta = \beta = 35°$; $\phi = \alpha = 20°$; $d = 1$ m ; $h = 100$ mm $= 0.1$ m ; $p = 1.7$ bar ; $x = 0.935$; $N = 250$ r.p.m.

We know that blade speed,

$$V_b = \frac{\pi (d + h) N}{60} = \frac{\pi (1 + 0.1) 250}{60} = 14.4 \text{ m/s}$$

Now let us draw the combined velocity triangle, as shown in Fig. 23.9, as discussed below :

1. First of all, draw a horizontal line, and cut off AB equal to 14.4 m/s to some suitable scale to represent the velocity of blade (V_b).

2. Now draw inlet velocity triangle ABC on the base AB with $\alpha = 20°$ and $\theta = 35°$.

3. Similarly draw outlet velocity triangle ABD on the same base AB with $\phi = 20°$ and $\beta = 35°$.

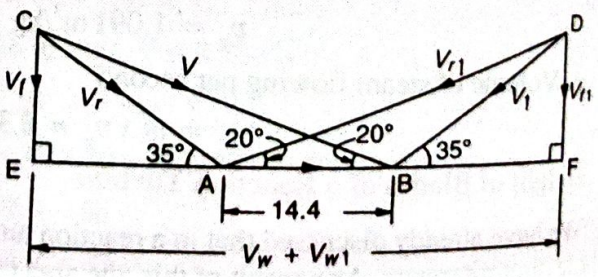

Fig. 23.9

4. From C and D draw perpendiculars to meet the line AB produced at E and F.

Generally the height of blades is taken as $k\,d$, where k is a design constant, whose value is usually taken as 1/12 and d is the diameter of the rotor drum.

By measurement from velocity triangle, we find that

Change in the velocity of whirl, $(V_w + V_{w1}) = EF = 42.5$ m/s

and velocity of flow at outlet, $V_{f1} = DF = 10$ m/s

Mass of steam flow

From steam tables, corresponding to a pressure of 1.7 bar, we find that the specific volume of steam, $v_g = 1.031$ m³/kg.

We know that mass of steam flow,

$$m = \frac{\pi (d+h)\, h\, V_{f1}}{x\, v_g} = \frac{\pi (1+0.1)\, 0.1 \times 10}{0.935 \times 1.031} = 3.58 \text{ kg/s} \quad \textbf{Ans.}$$

Power developed in the ring of the moving blades

We know that power developed in the ring of the moving blades,

$$P = m\,(V_w + V_{w1})\, V_b = 3.58 \times 42.5 \times 14.4 = 2191 \text{ W}$$

$$= 2.191 \text{ kW} \quad \textbf{Ans.}$$

Example 23.4. *A reaction turbine runs at 300 r.p.m. and its steam consumption is 15 400 kg/h. The pressure of steam at a certain pair is 1.9 bar ; its dryness 0.93 and power developed by the pair is 3.5 kW. The discharging blade tip angle is 20° for both fixed and moving blades and the axial velocity of flow is 0.72 of the blade velocity. Find the drum diameter and blade height. Take the tip leakage steam as 8%, but neglect blade thickness.*

Solution. Given : $N = 300$ r.p.m. ; $m_1 = 15\,400$ kg/h $= 4.28$ kg/s ; $p = 1.9$ bar ; $x = 0.93$; $P = 3.5$ kW $= 3.5 \times 10^3$ W ; $\alpha = \phi = 20°$; $V_f = 0.72\, V_b$

Since the tip leakage steam is 8%, therefore actual mass of steam flowing over the blades,

$$m = 4.28 - (4.28 \times 0.08) = 3.94 \text{ kg/s}$$

Blade height

h = Blade height, and

d_m = Mean diameter of the blades.

We know that blade velocity,

$$V_b = \frac{\pi\, d_m\, N}{60} = \frac{\pi\, d_m \times 300}{60} = 15.71\, d_m \text{ m/s}$$

$$\therefore \quad V_f = 0.72 \times 15.71\, d_m = 11.3\, d_m \text{ m/s}$$

Now let us draw the combined velocity triangle, as shown in Fig. 23.10, as discussed below :

1. First of all, draw a horizontal line, and cut off AB equal to $15.71\, d_m$, to some suitable scale representing the blade velocity (V_b).

2. Now draw inlet velocity triangle ABC on the base AB with $\alpha = 20°$ and $BC = V_f / \sin 20° = 11.3\, d_m / 0.342 = 33\, d_m$, to the scale.

3. Similarly, draw outlet velocity triangle on the same base AB with $\phi = 20°$ and $V_{r1} = V_{f1} / \sin 20° = 11.3\, d_m / 0.342 = 33\, d_m$, to the scale.

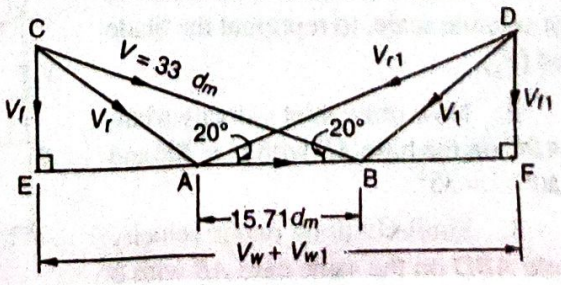

Fig. 23.10

4. From C and D draw perpendiculars to meet the line AB produced at E and F.

By measurement from velocity triangle, we find that change in the velocity of whirl,

$$(V_w + V_{w1}) = 46\, d_m \text{ m/s}$$

We know that power developed (P),

$$3.5 \times 10^3 = m\,(V_w + V_{w1})\, V_b = 3.94 \times 46\, d_m \times 15.71\, d_m = 2845\, d_m^2$$

$$\therefore \quad d_m^2 = 1.23 \quad \text{or} \quad d_m = 1.11 \text{ m}$$

and

$$V_{f1} = V_f = 11.3\, d_m = 11.3 \times 1.11 = 12.54 \text{ m/s}$$

From steam tables, corresponding to a pressure of 1.9 bar, we find that specific volume of steam,

$$v_g = 0.929 \text{ m}^3/\text{kg}$$

We know that mass of steam flow (m),

$$3.94 = \frac{\pi\, d_m\, h\, V_{f1}}{x\, v_g} = \frac{\pi \times 1.11 \times h \times 12.54}{0.93 \times 0.929} = 50.6\, h$$

$$\therefore \quad h = 0.078 \text{ m} = 78 \text{ mm} \quad \textbf{Ans.}$$

Drum diameter

We know that drum diameter,

$$d = d_m - h = 1.11 - 0.078 = 1.032 \text{ m} \quad \textbf{Ans.}$$

Example 23.5. *At a particular stage of a reaction steam turbine, the mean blade speed is 60 m/s. Steam is at a pressure of 3 bar with a temperature of 200° C. If the fixed and moving blades, at this stage, have inlet angle 30° and exit angle 20°, determine : (a) blade height at this stage, if the blade height is 1/10 of the mean blade ring diameter and the steam flow is 10 kg/s, (b) power developed by a pair of fixed and moving blade rings at this stage, and (c) the heat drop required by the pair if the steam expand with an efficiency of 85%.*

Solution. Given : $V_b = 60$ m/s ; $p = 3$ bar ; $T = 200°$ C ; $\theta = \beta = 30°$; $\phi = \alpha = 20°$

(a) *Blade height*

Let

d = Mean diameter of blade ring,

h = Blade height = $d/10$, and ...(Given)

m = Mass of steam flow = 10 kg/s ...(Given)

Now let us draw the combined velocity triangle, as shown in Fig. 23.11, as discussed below:

1. First of all, draw a horizontal line and cut off AB equal to 60 m/s, to some suitable scale, to represent the blade speed (V_b).

2. Now draw inlet velocity triangle ABC on the base AB with $\alpha = 20°$ and $\theta = 30°$.

3. Similarly draw outlet velocity triangle ABD on the same base AB with $\phi = 20°$ and $\beta = 30°$.

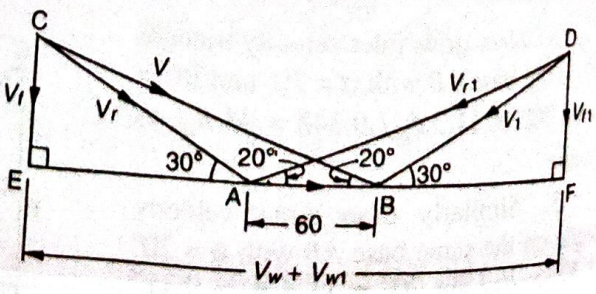

Fig. 23.11

4. From C and D draw perpendiculars to meet the line AB produced at E and F.

By measurement* from the velocity diagram, we find that

Change in the velocity of whirl, $(V_w + V_{w1}) = EF = 265$ m/s

and velocity of flow at exit, $V_{f1} = DF = 60$ m/s

From steam tables of superheated steam, corresponding to a pressure of 3 bar and 200° C, we find that the specific volume of steam,

$$v_{sup} = 0.7164 \text{ m}^3/\text{kg}$$

We know that mass of steam flow (m),

$$10 = \frac{\pi (d+h)\, h\, V_{f1}}{v_{sup}} = \frac{\pi (10\,h + h)\, h \times 60}{0.7164} = 2894\, h^2$$

$\therefore$ $h = 0.059$ m = 59 say 60 mm **Ans.**

(b) *Power developed*

We know that power developed by a pair of fixed and moving blade rings,

$$P = m\,(V_w + V_{w1})\, V_b = 10 \times 265 \times 60 = 159\,000 \text{ W}$$

$$= 159 \text{ kW} \quad \textbf{Ans.}$$

(c) *Heat drop required by the pair*

Since the steam expands with an efficiency of 85%, therefore heat drop required by the pair

$$= \frac{159}{0.85} = 187 \text{ kJ/s} \quad \textbf{Ans.} \qquad \ldots (\because 1 \text{ kW} = 1 \text{ kJ/s})$$

Example 23.6. *At a certain pair in a reaction turbine, the steam leaves the fixed blade at a pressure of 3 bar with a dryness fraction of 0.98 and a velocity of 130 m/s. The blades are 20 mm high and dicharge angle for both the rings is 20°. The ratio of axial velocity of flow to the blade velocity is 0.7 at inlet and 0.76 at exit from the moving blade. If the turbine uses 4 kg of steam per second with 5% tip leakage, find the mean blade diameter and the power developed in the ring.*

Solution. Given : $p = 3$ bar ; $x = 0.98$; $V = 130$ m/s ; $h = 20$ mm $= 0.02$ m ; $\alpha = \phi = 20°$; $V_f = 0.7\, V_b$; $V_{f1} = 0.76\, V_b$; $m_1 = 4$ kg/s

Since the tip leakage is 5%, therefore actual mass of steam flow in the turbine,

$$m = 4 - (4 \times 0.05) = 3.8 \text{ kg/s}$$

Mean blade diameter

Let d_m = Mean blade diameter.

---

* These values may also be found out analytically by the geometry of the velocity diagram by method discussed on page 526 or by the sine rule as discussed below :

$$\frac{V}{\sin 150°} = \frac{V_r}{\sin 20°} = \frac{60}{\sin 10°}$$

$\therefore$ $$V_r = \frac{60}{\sin 10°} \times \sin 20° = \frac{60}{0.1736} \times 0.3420 = 118.2 \text{ m/s}$$

and $$V_f = V_r \sin 30° = 118.2 \times 0.5 = 59.1 \text{ m/s}$$

$\therefore$ $$EA = V_r \cos 30° = 118.2 \times 0.866 = 102.4 \text{ m/s}$$

and $$(V_w + V_{w1}) = EA + AB + BF = 102.4 + 60 + 102.4 = 264.8 \text{ m/s}$$

From the combined velocity of triangle, we find that the velocity of flow at inlet,

$$V_f = V \sin 20^\circ = 130 \times 0.342 = 44.46 \text{ m/s}$$

and blade velocity, $$V_b = \frac{V_f}{0.7} = \frac{44.46}{0.7} = 63.5 \text{ m/s}$$

∴ Velocity of flow at exit,

$$V_{f1} = 0.76\, V_b = 0.76 \times 63.5 = 48.3 \text{ m/s}$$

From steam tables, corresponding to a pressure of 3 bar, we find that specific volume of steam,

$$v_g = 0.6055 \text{ m}^3/\text{kg}$$

We know that mass of steam flow (m),

$$3.8 = \frac{\pi d_m \times h\, V_{f1}}{x\, v_g} = \frac{\pi d_m \times 0.02 \times 48.3}{0.98 \times 0.6055} = 5.1\, d_m$$

∴ $$d_m = 0.745 \text{ m} = 745 \text{ mm}$$ **Ans.**

Power developed in the ring

Now let us draw the combined velocity triangle, as shown in Fig. 23.12, as discussed below :

1. First of all, draw a horizontal line and cut off AB equal to 63.5 m/s, to some suitable scale, representing the blade velocity (V_b).

2. Now draw inlet velocity triangle ABC on the base AB with $\alpha = 20^\circ$ and $V = 130$ m/s to the scale.

3. Similarly, draw outlet velocity triangle ABD on the same base AB with $\phi = 20^\circ$ and V_{r1} equal to $V_{f1}/\sin 20^\circ = 48.3 / 0.342 = 141.2$ m/s, to the scale.

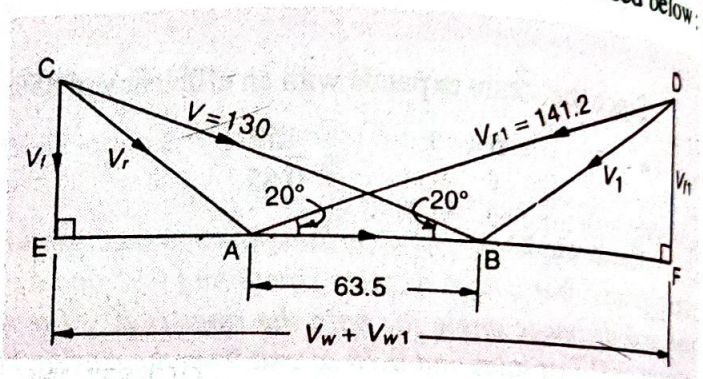

Fig. 23.12

4. From C and D draw perpendiculars to meet the line AB produced at E and F.

By measurement, we find that change in the velocity of whirl,

$$(V_w + V_{w1}) = EF = 190 \text{ m/s}$$

We know that power developed in the ring,

$$P = m\,(V_w + V_{w1})\, V_b = 3.8 \times 190 \times 63.5 = 45\,850 \text{ W}$$

$$= 45.85 \text{ kW}$$ **Ans.**

EXERCISES

1. The following particulars refer to a stage of a Parson's steam turbine, comprising one ring of fixed blades and one ring of moving blades :

Mean diameter of blade ring = 700 mm ; R.P.M. = 3000 ; Steam velocity at exit of blades = 160 m/s ; Blade outlet angle = 20° ; Steam flow through blades = 7 kg/s.

Draw a neat velocity diagram and find (*a*) Blade inlet angle ; (*b*) Tangential force on the ring of moving blades ; and (*c*) Power developed in the stage. [**Ans.** 33.5° ; 2625 N ; 288.75 kW]

2. A reaction turbine running at 360 r.p.m. consumes 5 kg of steam per second. The leakage is 10%. The discharge blade tip angle for both moving and fixed blades is 20°. The axial velocity of flow is 0.75 times blade velocity. The power developed by a certain pair is 4.8 kW where the pressure is 2 bar and dryness fraction is 0.95. Find the drum diameter and blades height. [Ans. 0.931 m ; 83 mm]

3. A 50% reaction turbine (with symmetrical velocity triangles) running at 400 r.p.m. has the exit angle of the blades as 20° and the velocity of steam relative to the blades at exit is 1.35 times the mean blade speed. The steam flow rate is 8.33 kg/s and at a particular stage, the specific volume is 1.381 m^3/kg. Calculate for this stage 1. a suitable blade height, assuming the rotor mean diameter 12 times the blade height, and 2. the diagram work. [Ans. 138 mm ; 153.14 N-m/s]

4. The outlet angle of a blade of Parson's turbine is 20° and the axial velocity of flow of steam is 0.5 times the mean blade velocity. Draw the velocity diagram for a stage consisting of one fixed and one moving row of blades.

It is given that mean diameter = 710 mm and speed of rotation = 3000 r.p.m. Find the inlet angle of blades if the steam is to enter the blade channels without shock.

If the blade height is 64 mm, the mean steam pressure 5.6 bar, the steam dry saturation (v_g = 0.5454 m^3/kg); find the power developed in the stage. [Ans. 50° ; 516.9 kW]

5. At a particular ring of a reaction turbine, the blade speed is 66 m/s and the flow of steam is 4 kg/s dry saturated at 1.4 bar. Both fixed and moving blades have inlet and exit angles of 35° and 20° respectively. Calculate : 1. the required blade height which is to be one-tenth of the mean blade ring diameter, 2. the power developed by the pair of rings, and 3. the heat drop required by the pair if the steam expand with an efficiency of 80 percent.

[Ans. 55 mm ; 57 kW ; 71.3 kJ/s]

6. The blade angles of both fixed and moving blades of a reaction steam turbine are 35° at the receiving tips and 20° at the discharging tips. At a certain point in the turbine, the drum diameter is 1.37 m and the blade height is 127 mm. The pressure of steam supply to a ring of fixed blades at this point is 1.25 bar and the dryness fraction is 0.925. Find the workdone in next row of moving blades for 1 kg of steam at 600 r.p.m., the steam passing through the blades without shock.

Assuming an efficiency of 85% for the pair of rings of fixed and moving blades, find the heat drop in the pair and the state of steam at entrance to the next row of fixed blades. [Ans. 6.77 kN-m/s ; 7.962 kJ/s]

QUESTIONS

1. Distinguish between impulse and reaction turbine.
2. Explain the functions of the blading of a reaction turbine.
3. Draw the combined velocity triangle for a single stage reaction turbine and derive an expression for workdone per stage.
4. Define the term 'degree of reaction' as applied to a reaction turbine. Show that for a Parson's reaction turbine, the degree of reaction is 50 percent.
5. What do you understand by the term 'height of blades' as applied to a reaction turbine.

OBJECTIVE TYPE QUESTIONS

1. In a reaction turbine
   (a) the steam is allowed to expand in the nozzle, where it gives a high velocity before it enters the moving blades
   (b) the expansion of steam takes place partly in the fixed blades and partly in the moving blades
   (c) the steam is expanded from a high pressure to a condenser pressure in one or more nozzles
   (d) the pressure and temperature of steam remains constant.