MEERUT INSTITUTE OF ENGINEERING AND TECHNOLOGY

(Autonomous)
B. Tech.
Super 50_MEM101_Odd sem.
Trends In Electrical & Mechanical Engineering
[Session: 2025-26]

Electrical Engineering (Unit1,Unit2 and part of Unit5)

Short Question

1. Describe the following elements briefly:
   (i)Independent Ideal Voltage source (ii) Independent Ideal Current source (iii) Linear and non linear elements
2. Describe KCL & KVL with necessary circuit representation.
3. Why commutator is needed?
4. Describe briefly the different types of DC machines.
5. Derive that average power consumed by a pure inductor is zero.
6. Explain the term "Dynamic Impedance" in AC circuit.
7. Define the following terms as applied to magnetic circuit:(i) MMF(ii) Flux density(iii) Reluctance(iv) Permeability.
8. What will happen if the primary of a transformer is connected to dc supply?
9. A 3-phase 440 V, 50 Hz induction motor has a 5% slip. What will be the speed of the rotor?

Long Questions

10. Describe the working principle and torque-slip characteristics of 3-ϕ induction motor.
11. What is the relationship between frequencies of stator & rotor currents? A 3-phase, 50 Hz induction motor has 6 poles and operates with a slip of 5 % at a certain load. Determine (i) the speed of the rotor with respect to the stator (ii) the frequency of rotor current (iii) the speed of the rotor magnetic field with respect to rotor.
12. A 3-phase, 440 V induction motor is wound for 4 poles and is supplied from a 50 Hz supply system. Calculate the frequency of the rotor curent when slip is 5%.
13. Explain the working principle of transformer and derive the EMF equation.
14. Draw the complete equivalent circuit model of a real transformer and explain its different parameters?
15. A 100 kVA, single-phase transformer has iron loss of 600 W and a copper loss of 1.5 kW at full-load current. Calculate the efficiency at (i) full load and 0.8 lagging pf, and (ii) half load and unity pf?
16. A 50 KVA transformer has a core loss of 400 W and a full load copper loss of 800 W. The power factor of the load is 0.9 lagging. Calculate: (i) Full load efficiency (ii) The maximum efficiency and the load at which maximum efficiency occurs
17. What do you understand by the efficiency of a transformer? Deduce the condition for maximum efficiency.
18. Explain the phenomenon of resonance in series R-L-C circuit. Also derive the expressions for resonance frequency and quality factor.
19. Derive the expression for resonant frequency & quality factor for an ac circuit under the condition of parallel resonance.

20. Derive the EMF equation of the generator. A 4-pole generator with 400 armature conductors has a useful flux of 0.04Wb per pole. What is the e.m.f produced if the machine is wave wound and runs at 1200 rpm?

21. Derive the expression of torque for dc motor. A 250V dc shunt motor takes 41A at full load. Resistances of motor armature and shunt field winding are 0.1 Ω and 250 Ω respectively. Find the back e.m.f. on full load. What will be generated emf, if working as generator and supplying 41A to a load at terminal voltage of 250V?

22. Calculate the current across 6 Ω resistor in the following circuit using:
(i) Mesh Analysis (ii) Nodal Analysis

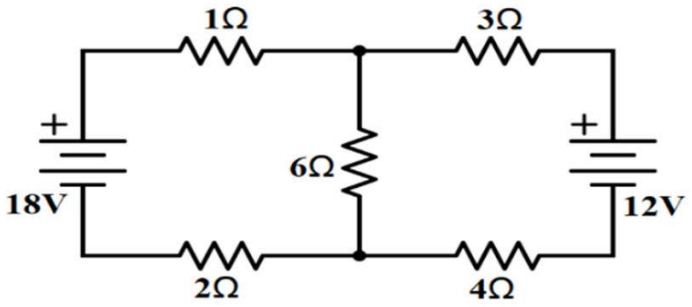

23. Find the current in all branches shown in figure using mesh analysis.

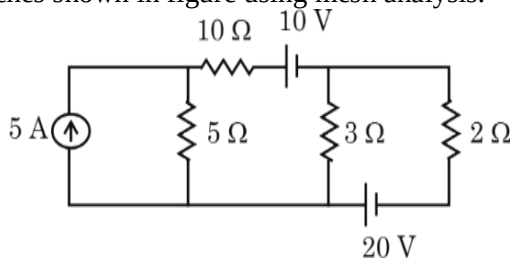

24. Find the current in all branches by using nodal analysis.

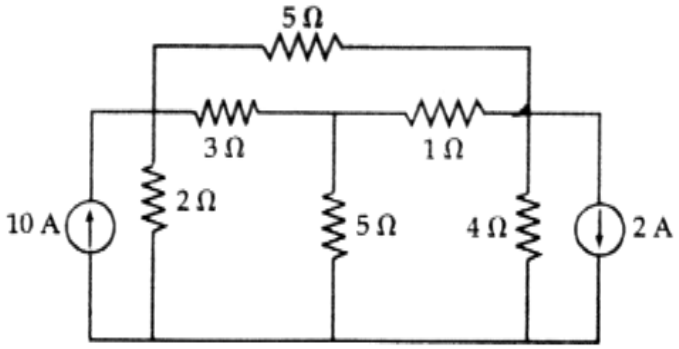

25. Determine the currents in the various branches of the circuit shown in Figure by nodal analysis?

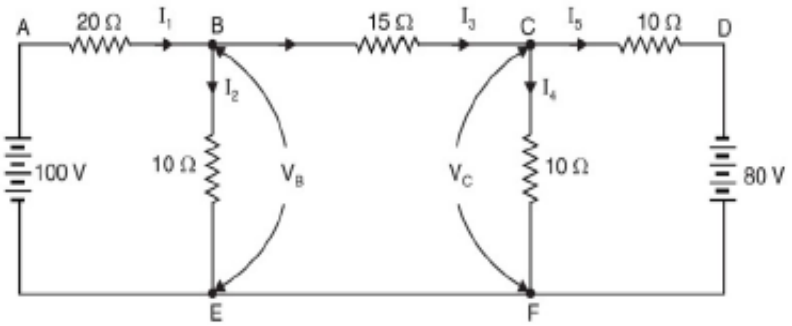

Mechanical Engineering(Unit3,Unit4 and part of Unit5)

1. Define Force, Moment and couple. Write any four characteristics of force.
2. Explain force system in details.
3. Explain the principle of transmissibility of forces
4. State-(i) Parallelogram law and (ii) Polygon law of forces.
5. State and prove Varignon's theorem.
6. Explain Different types of ***load and supports*** subjected to a beam.
7. Find the resultant of forces 2, √**3**, 5, √**3** and 2 N that act at an angular point of a regular hexagon towards the other angular points taken in order.
8. Five forces are acting on a regular hexagon at an angular point as shown in Fig. Calculate their resultant in magnitude and direction.

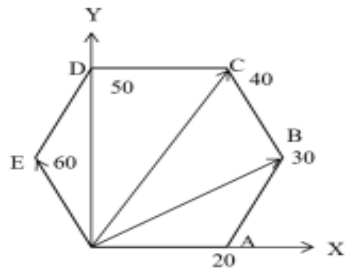

9. A system of four forces acting on a body is as shown in Fig. Determine the resultant.

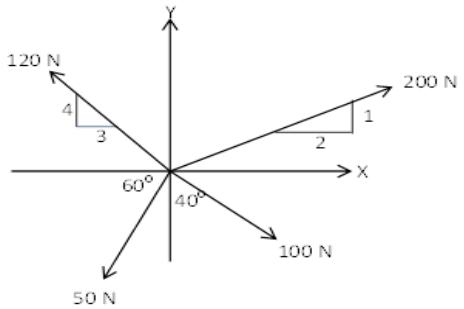

10. What are equations of equilibrium? Also find the reactions at point A and B as shown in figu

re

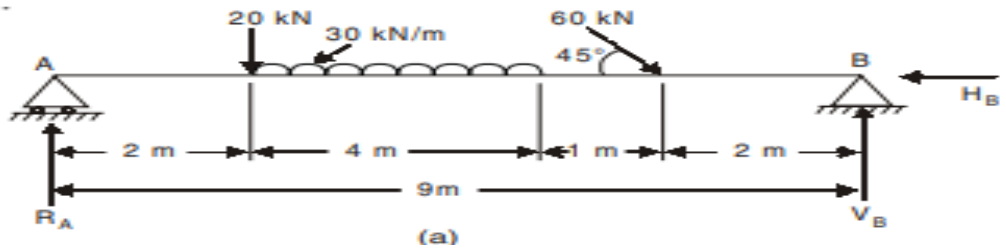

11. A beam AB 20 m long supported on two intermediate supports 12 m apart, carries a uniformly distributed load of 6 kN/m and two concentrated loads of 30kN at left end A and 50 kN at the right end B as shown in Fig. How far away should the first support C be located from the end A so that the reactions at both the supports are equal?

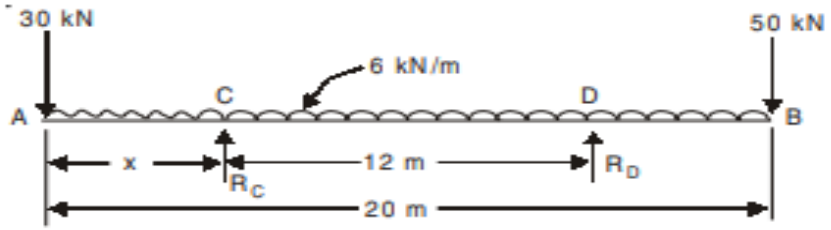

12. A beam 8 m long is hinged at A and supported on roller over a smooth surface inclined at an angle 30^0 to the horizontal at B. The beam is loaded as shown in Fig. Determine the support reactions.

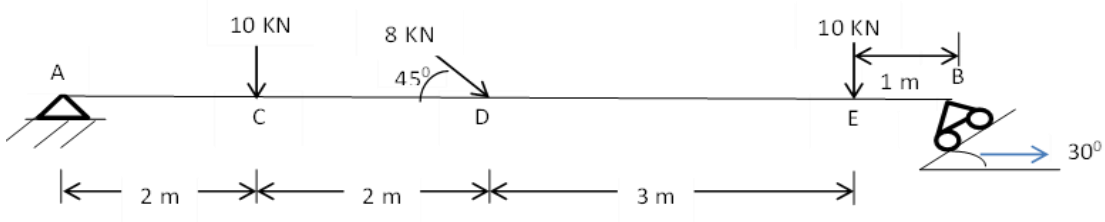

13. A beam has been loaded and supported as shown in figure given below. Determine the reactions at the support point A and B.

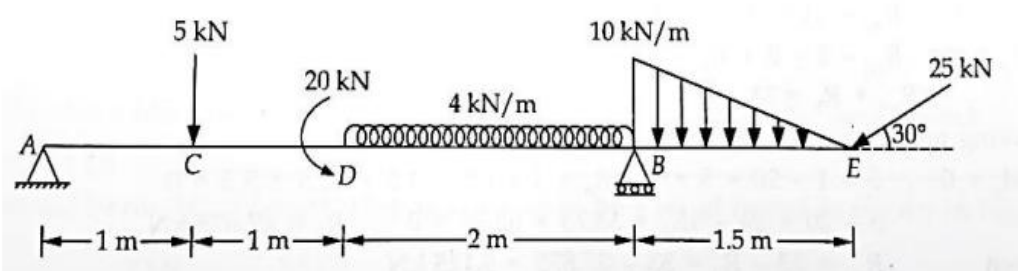

14. Define Mechatronics. Write the advantages and disadvantages and industrial applications of Mechatronics.

15. Define Autotronics , Bionics and Avionics with examples of each.

16. What are sensors and transducers? Enumerate the various types of sensors and transducers.

17. What is the CAM? Define its function and application. What are the types of CAM and followers?

18. Define gear train and gear ratio. Describe different types of gears with diagrams.

19. Explain the mechanism of Ratchet –pawl with neat sketch and its applications.

20. Write short notes on (i) Belts drives, (ii) bearing

21. What are linear actuators? Describe Single & Double Acting Hydraulic Cylinders with diagrams.
22. What is pressure control valve? Also explain the working Pressure Relief Valve.
23. What is direction control valve? Explain the working of 3/2 Pneumatically Actuated Directional Control Valve with diagram.
24. What is a control system? What are the elements of a control system? Explain open loop and closed loop control system with neat sketch and relevant examples? Compare both also.
25. What is a pump? Explain the construction and working of a centrifugal pump with neat sketch showing its various parts.