# The Bombay Salesian Society's
# Don Bosco Institute of Technology

*(An Autonomous College Affiliated to University of Mumbai)*

## Department of Electronics & Telecommunication Engineering

Community Engagement Project I Presentation

# AutoGuard : Automatic Intruder Alert System


Raza Sayed ET53

Aarya Talegaonkar ET54

Sakshi Talkar ET55

Ashlesha Tambat ET56

Guide Name: Freda Carvalho


Date: 5th December 2025

# Contents


- Problem Statement
- Project Objectives
- Project Outcomes
- Block Diagram & Implementation
- Results & Future Scope
- Sustainable Development Goals
- Conclusion & References

# Problem Statement

This project eliminates the issue of intruder detection by addressing the lack of real-time monitoring in many areas. Traditional systems like CCTV depend on human supervision and fail to give instant alerts. The aim is to develop an Automatic Intruder Alert System that detects unauthorized entry and immediately notifies the user by illuminating the lights.

**Existing Challenges / Gaps** : Dependence on manual surveillance.
High cost of advanced systems
Frequent false alarms
Limited coverage and blind spots
Poor night-time detection

**Why It Needs to Be Solved?** A reliable automatic detection system improves safety, reduces human effort, prevents theft or unauthorized entry, and ensures quick response during emergencies.

**Impact if Left Unsolved**: 1. Increased security breaches and theft 2. Higher risk to personal safety 3. Delayed response during emergencies 4. Continued dependence on manual monitoring

# Project Objectives

**Primary Objective**

To build an Automatic Intruder Alert System that detects unauthorized entry in real-time and sends an immediate alert to the user.

**Secondary Objectives:**

Reduce dependence on manual monitoring

Minimize false alarms

Ensure continuous and reliable detection

**Key Milestones:** 1.Finalize system requirements 2. Design system layout and workflow 3. Set up sensors and hardware

4. Develop and test the software 5. Integrate, test, and optimize the complete system

**Success Metrics**: 1. Accurate intrusion detection

2. Fast alert response time

# Project Outcomes

**Expected Deliverables**

- Prototype of Automatic Intruder Alert System
- IR sensor detection with instant alert
- Integrated hardware and software

**Functional Capability**

- Detects intruders in real-time
- Triggers immediate alerts
- Works continuously

**Applications**

- Home, office, warehouse, bank security, etc.
- Smart homes and IoT-based systems
- Laboratories and research centers

**Benefits**

- Protects people and property
- Reduces human monitoring
- Prevents theft and financial loss

# Block Diagram

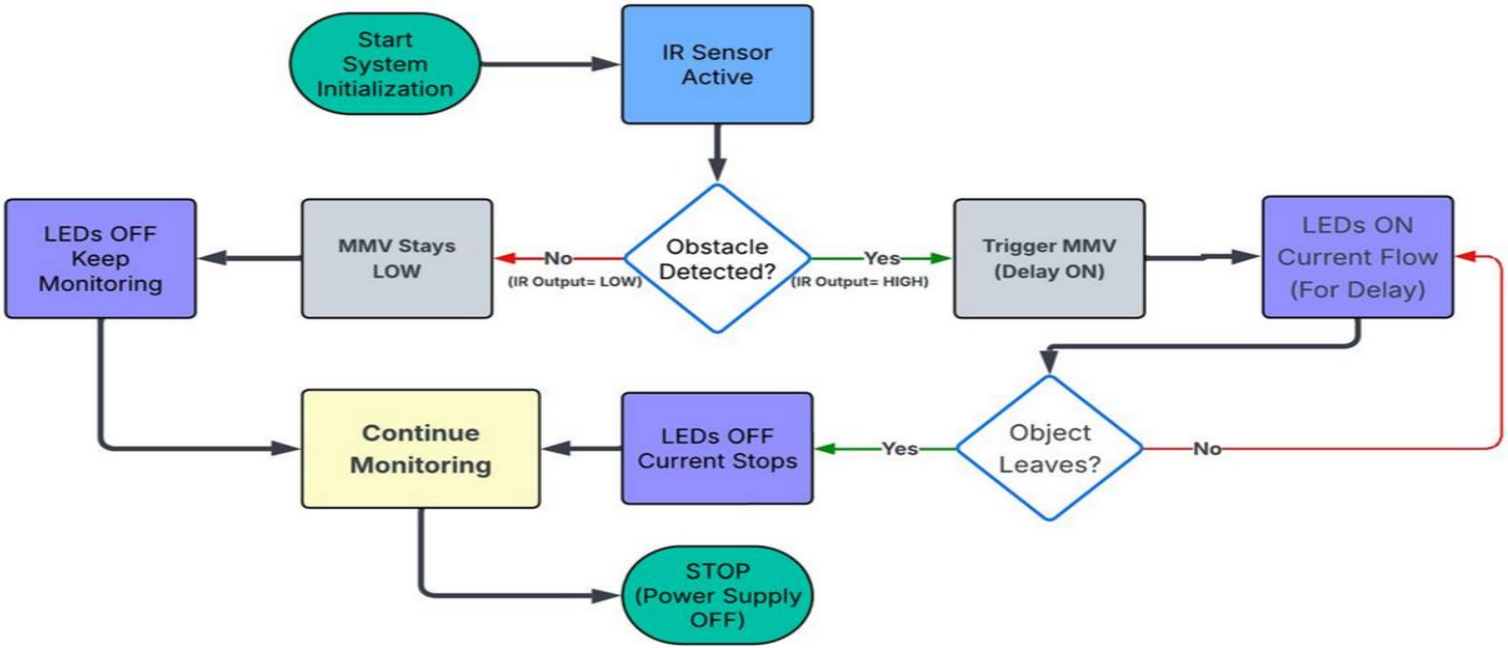

# Implementation - Hardware

**Hardware Components**

- **555 Timer IC** – generates pulses to trigger the alarm
- **IR Sensor**- detects motion or intruder presence
- **LED –** provides visual alerts
- **Resistors** (220 ohm and 150 Kohm) and **Capacitors** (0.01uf and 22uf)– for timing and circuit configuration
- **Power Supply –** 8V DC battery
- **Wires and Breadboard**– for assembling the circuit

# Implementation - Design

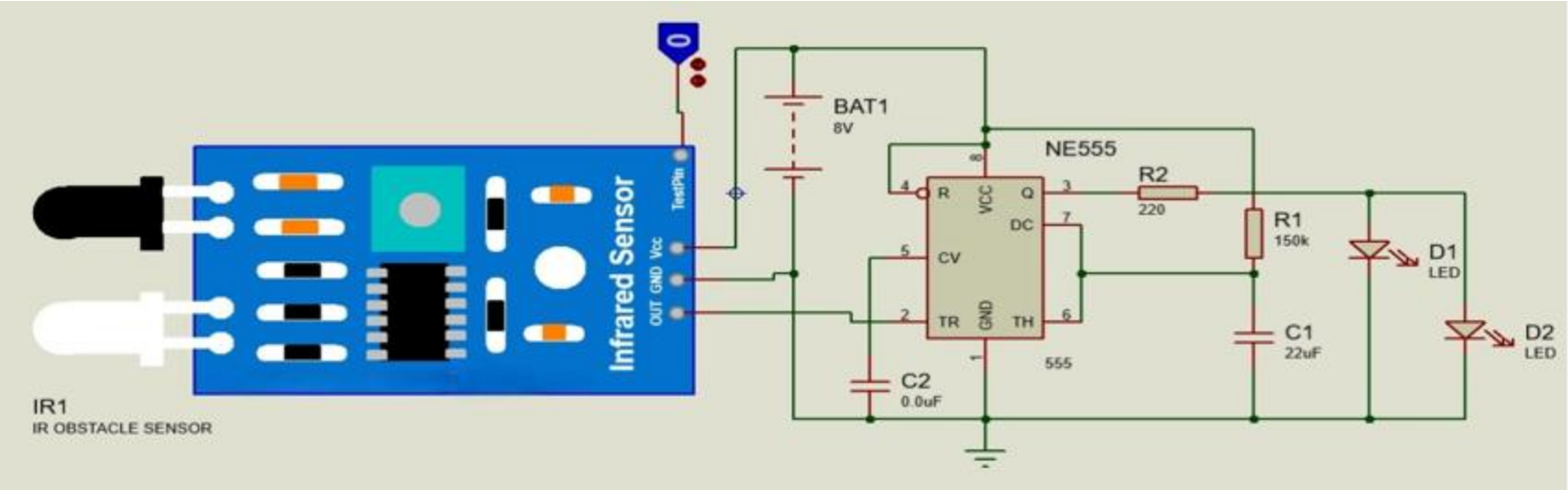

# Future Scope

**Enhancements and Improvements**

- Add features like adjustable sensitivity, longer detection range, and better night-time accuracy.
- Use advanced sensors (PIR, ultrasonic) for higher reliability.

**Scalability and Optimization**

- Expand the system for larger areas such as buildings, parking lots, and campuses.
- Optimize power usage with LEDs, low-power circuits, and solar modules.

**Integration with Other Systems**

- Connect with IoT platforms for mobile alerts.
- Integrate with CCTV cameras, alarms, and home automation systems.

**Long-Term Vision**

- Develop a fully smart, energy-efficient security ecosystem.
- Enable AI-based intrusion detection and community-wide safety networks.

# Results

The Automatic Intruder Alert System was tested for detection, speed, and reliability.

**Performance Metrics:**

Detection Accuracy: 95%

Delay: 4-5 sec

Alert Response Time: <1 second

Coverage Area: 3-5 cm

**Comparison with existing solutions:**

Faster alerts. Fully automated with no manual monitoring and low-cost

# Sustainable Development Goals

**Relevant UN SDGs**

**SDG 7** (Clean Energy), **SDG 9** (Innovation), **SDG 11** (Sustainable Cities).

**Environmental Impact**

Reduces energy waste by activating lights only when motion is detected; uses low-power components and supports future solar integration.

**Social & Economic Benefits**

Provides affordable security, improves safety in homes and public spaces, reduces theft risks, and lowers long-term electricity and monitoring costs.

**Long-Term Sustainability**

Low maintenance, durable design, scalable for upgrades, and contributes to safer, energy-efficient smart communities

# Conclusion

The **AutoGuard Automatic Intruder Alert System** successfully demonstrates a **simple, reliable,** and **energy-efficient** security solution for small-scale environments. Through the integration of an **IR sensor** and a monostable 555-timer circuit, the system effectively detects motion and activates illumination, providing immediate visual alerts without the need for manual supervision. The project achieves its key objectives of enhancing **nighttime visibility, reducing power consumption,** and offering an affordable alternative to expensive security technologies.

Overall, the project highlights the **significance** of **low-cost** automation in improving safety across homes, shops, and public spaces. With its scalable design and potential for future enhancements—such as **IoT alerts, solar integration, and AI-based detection**—AutoGuard stands as a practical and impactful step toward smarter and more accessible security solutions.

# References

**[1]** K. Singh and M. Das, "**Sustainable automation systems: Energy-efficient motion sensors and their role in achieving sdgs," International Journal of Sustainable Engineering and Technology**, 2021.

**[2]** A. Rao and R. Mehta, "**Enhancing urban safety through intelligent surveillance and motion-based alert systems," Journal of Smart Security and Urban Management**, 2020.

**[3]** S. Patel and M. Iyer, "**Applications of motion-activated lighting and intruder alert systems in residential, commercial, and public environments**," Journal of Intelligent Safety and Security Technologies, 2021.

**[4]** R. Kumar and N. Bhattacharya, "**Intelligent intrusion detection systems using infrared sensors and automated alert mechanisms,"**International Journal of Embedded Systems and Smart Automation, 2020.

**[5]** J. Fraden, **Handbook of Modern Sensors: Physics, Designs, and Applications**, 5th ed. Springer, 2015.

THANK YOU