Word2Vec

TELFER

BUSINESS FOR A BETTER CANADA

Presented by **Ashok Kumar**

Main Idea

What is Word2Vec?

- A method which can be used to create/learn embeddings of words

What is Embedding?

- a concept of representing text and words as vectors of numbers that capture their meaning
- Also known as representations, feature vectors etc.

TELFER

Intuition

Word	Royalty	Gender (M → F)	Edibility
King	0.99	-0.95	-0.95
Queen	0.99	0.95	-0.95
Apple	-0.90	0.01	0.98
Orange	-0.90	0.01	0.97

TELFER

Intuition

Key idea here is that:

- Since we represent them as vectors or as points, we can compare them!

TELFER

Intuition

MIT Technology Review

Featured Topics Newsletters Events Audio SIGN IN SUBSCRIBE & SAVE 25%

ARTIFICIAL INTELLIGENCE

King – Man + Woman = Queen: The Marvelous Mathematics of Computational Linguistics

The ability to number-crunch vast amounts of words is creating a new science of linguistics.

By Emerging Technology from the arXiv September 17, 2015

TELFER

Key Takeaways

- If we want to pack more info in an embedding, we need to increase the dimension of the embedding
- Once we have embedding of words, we can numerically compare them using cosine similarity

Usually, we have **300-dimensional** embeddings

TELFER

Word2Vec model

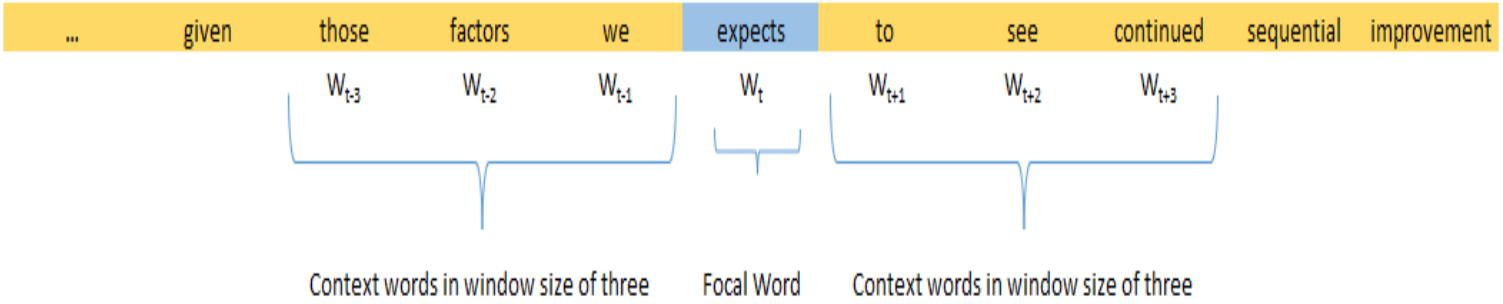

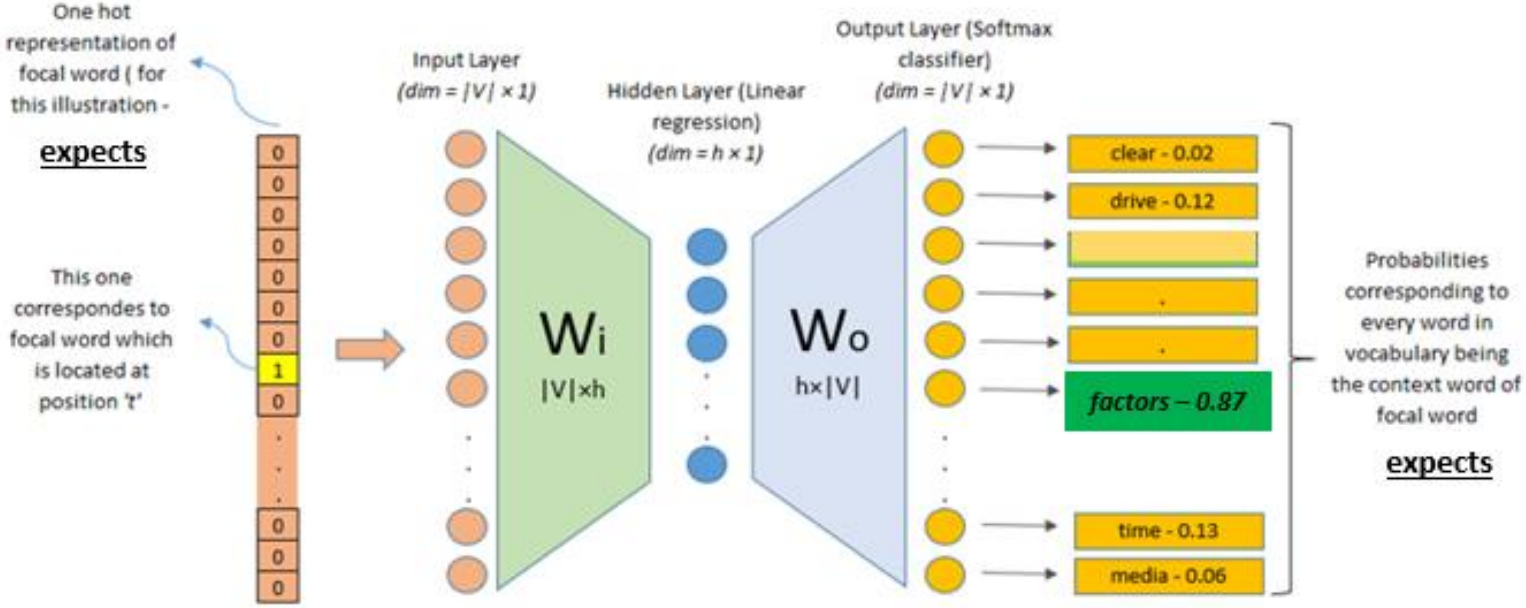

Word2Vec architectures

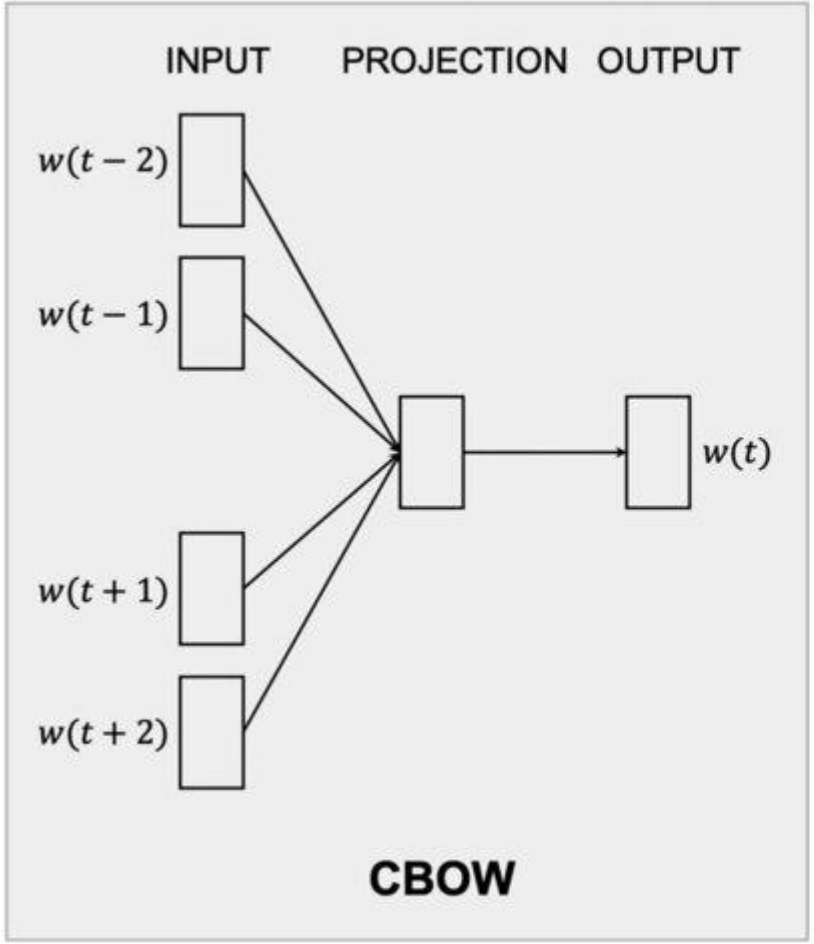

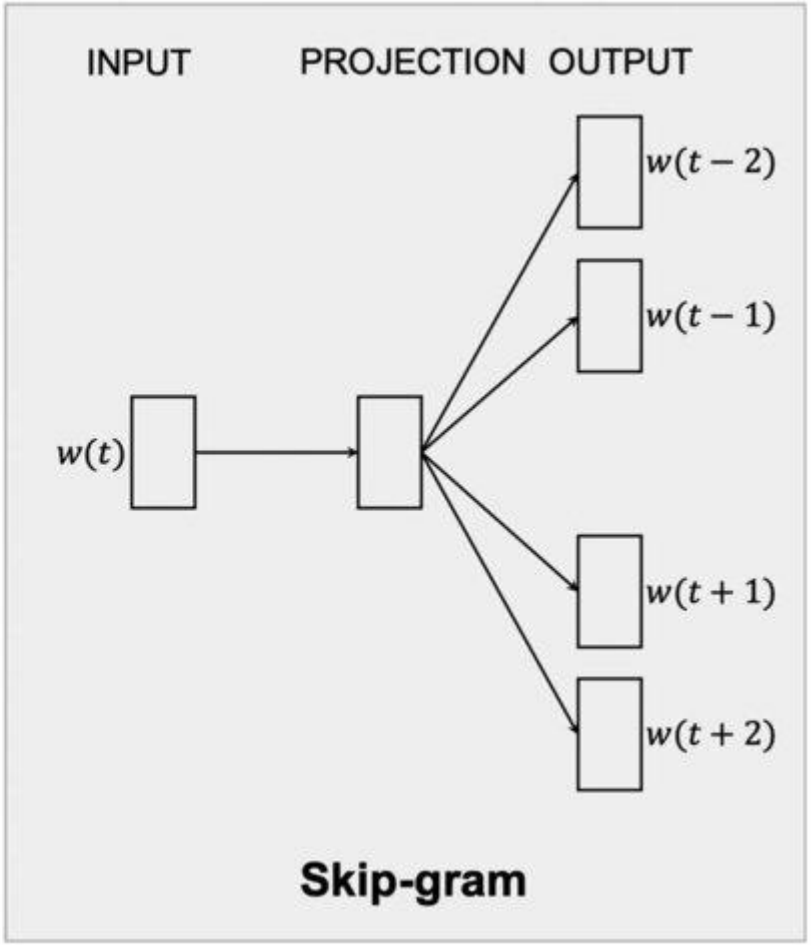

TELFER

Word2Vec Architectures: CBOW vs. Skip-gram

The quick brown fox jumps over the lazy dog.

CBOW Model (Continuous Bag of Words)

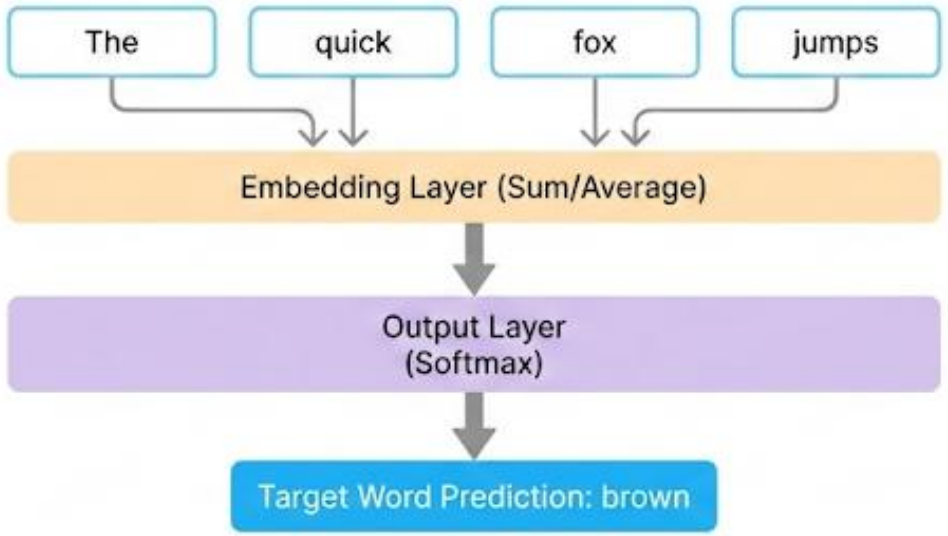

CBOW predicts the central target word based on its surrounding context words. It averages the context embeddings to find the target.

Skip-gram Model

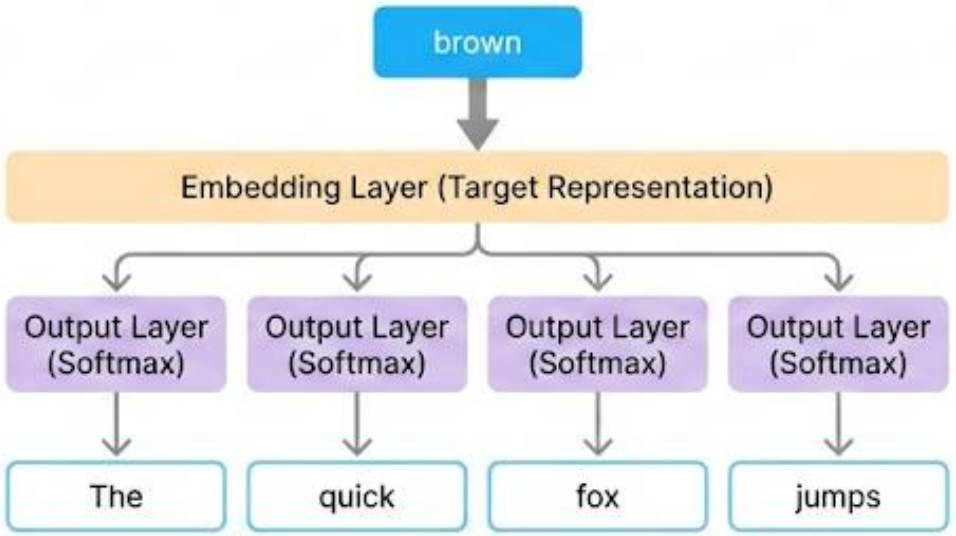

Skip-gram predicts surrounding context words given a central target word. It uses the target embedding to generate probabilities for each context word.

TELFER

Thank You!