Computer Networks
Introduction

Data Communications

- The term telecommunication means communication at a distance. The word data refers to information presented in whatever form is agreed upon by the parties creating and using the data. Data communications are the exchange of data between two devices via some form of transmission medium such as a wire cable.

Fundamental Characteristics

- The effectiveness of a data communication system depend on four fundamental characteristics:
  - Delivery
  - Accuracy
  - Timelines
  - Jitter

Five Components of Data Communication

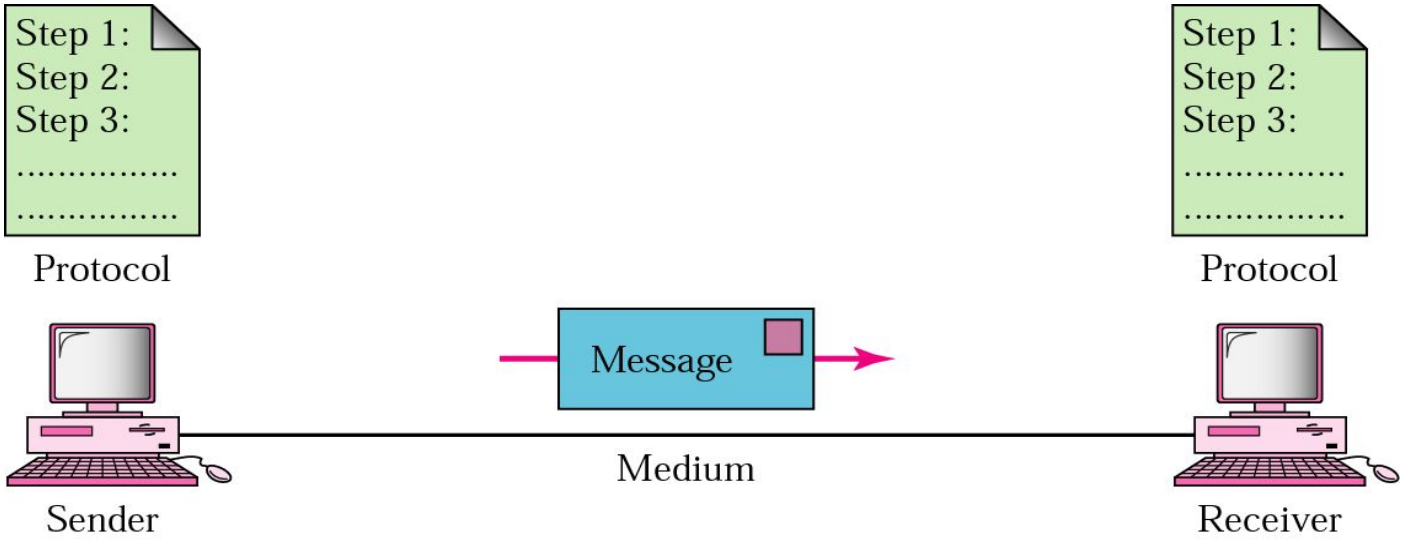

1. Message
2. Sender
3. Receiver
4. Medium
5. Protocol

Direction of data flow

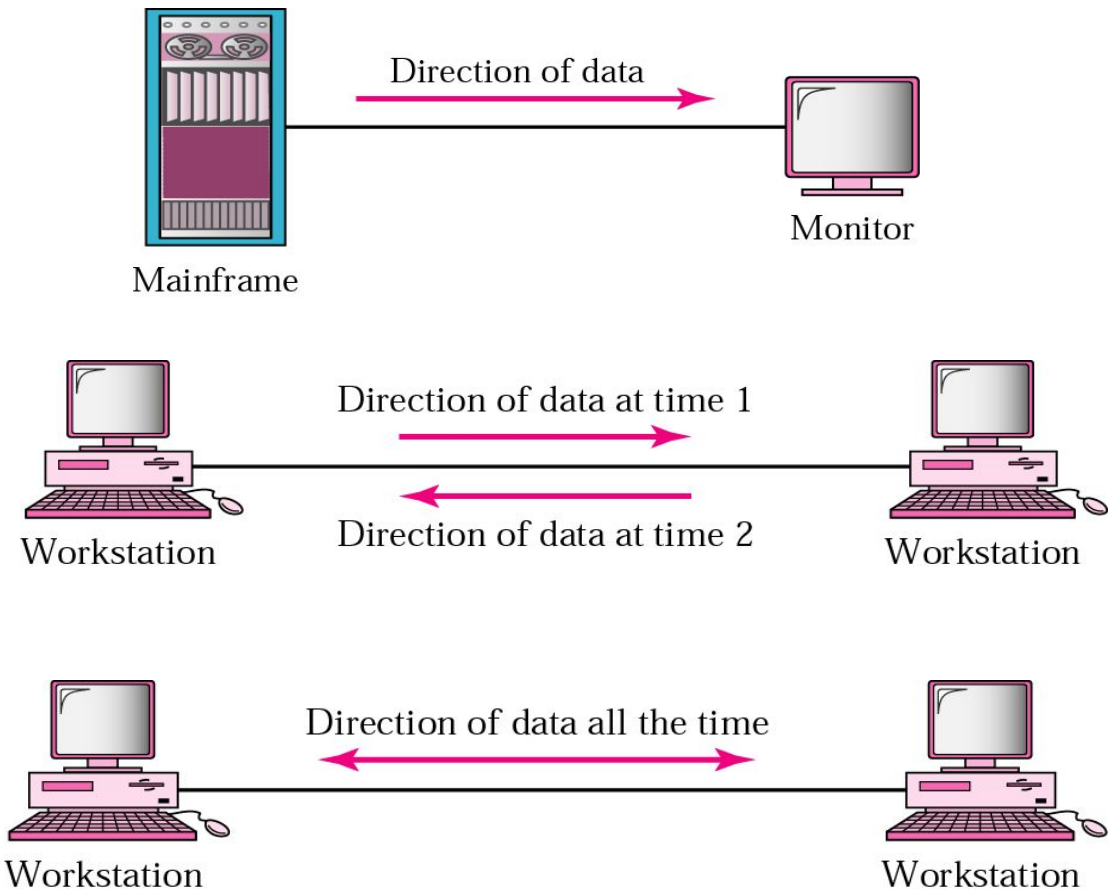

Simplex

Half Duplex

Full Duplex

Networks: key issues

- Network criteria
  - Performance
    - Throughput
    - Delay
  - Reliability
    - Data transmitted are identical to data received.
    - Measured by the frequency of failure
    - The time it takes a link to recover from a failure
  - Security
    - Protecting data from unauthorized access

Terminology

- The ***throughput*** or ***bandwidth*** of a channel is the number of bits it can transfer per second

- The ***latency*** or ***delay*** of a channel is the time that elapses between sending information and the earliest possible reception of it

Network topologies

- Topology defines the way hosts are connected to the network

Network topology issues

a goal of any topology

1. high **throughput** (bandwidth)
2. low **latency**

Bandwidth and Latency

Bandwidth

1. telecommunications: **range of radio frequencies:** a range of radio frequencies used in radio or telecommunications transmission and reception

2. computing: **communications capacity:** the capacity of a communications channel, for example, a connection to the Internet, often measured in bits per second

3. a data **transmission rate**; the maximum amount of information (bits/second) that can be transmitted along a channel

Latency

A synonym for *delay,* is an expression of how much time it takes for transmission from one designated point to another

Categories of Topology

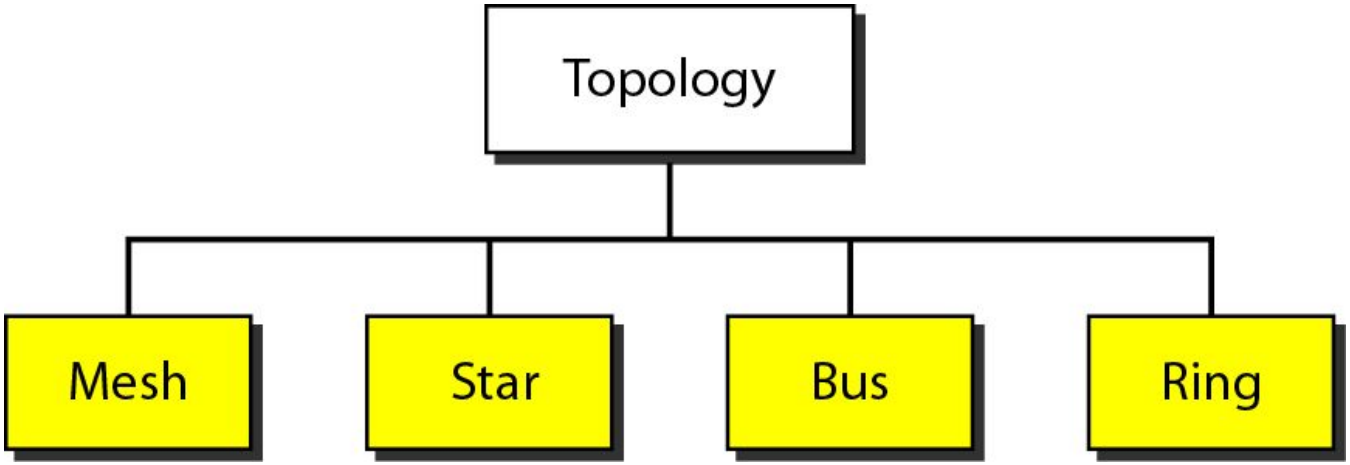

Mostly used network topologies

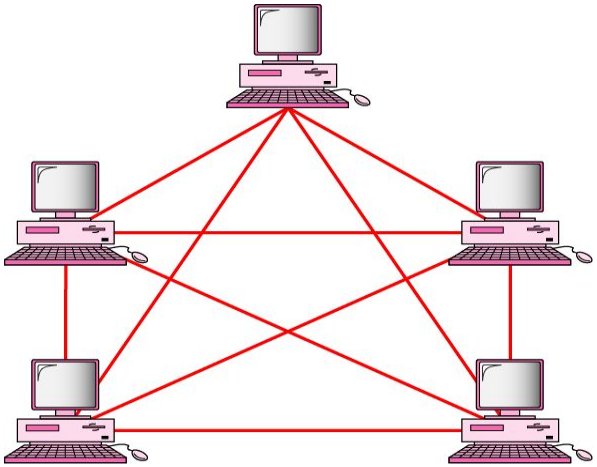

mesh

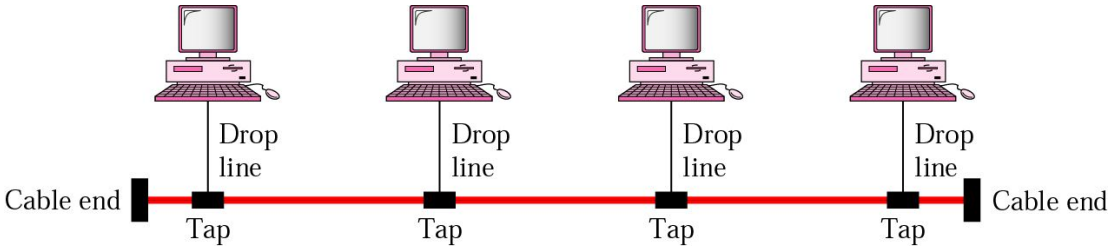

bus

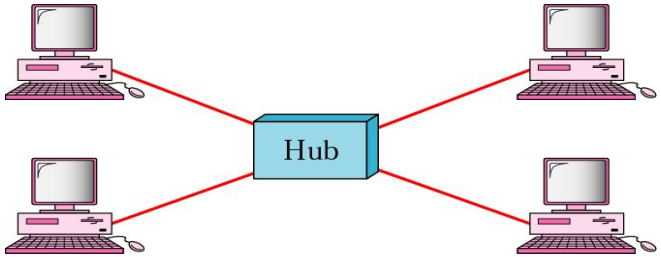

star

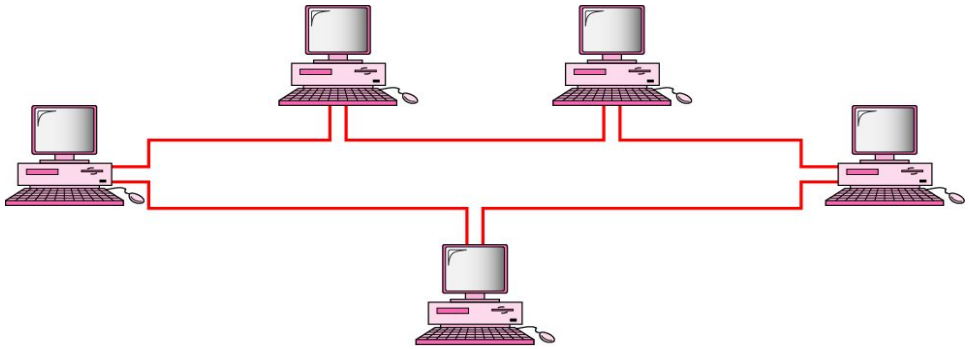

ring

A hybrid topology: a star backbone with three bus networks

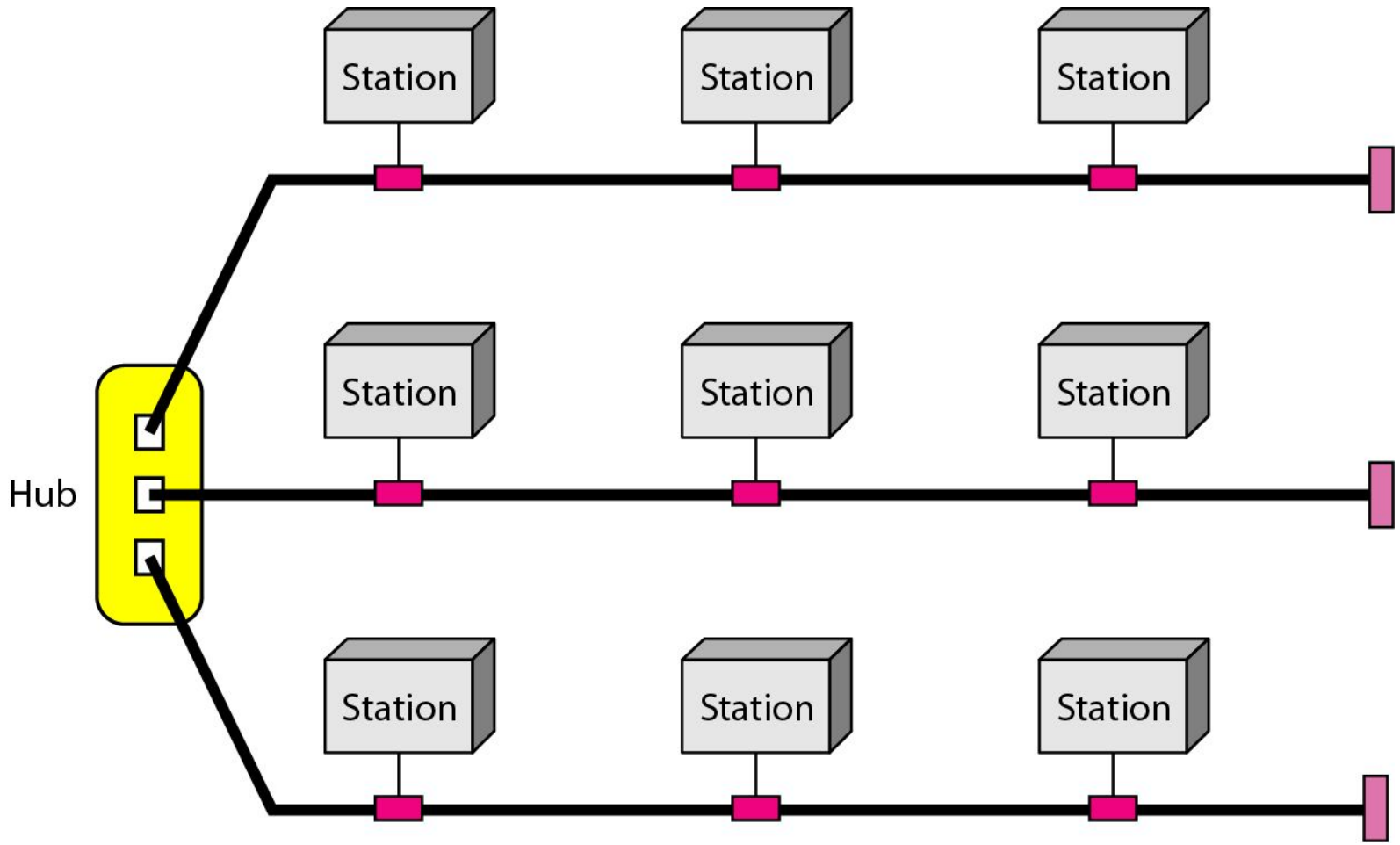

Hierarchical organization of the Internet

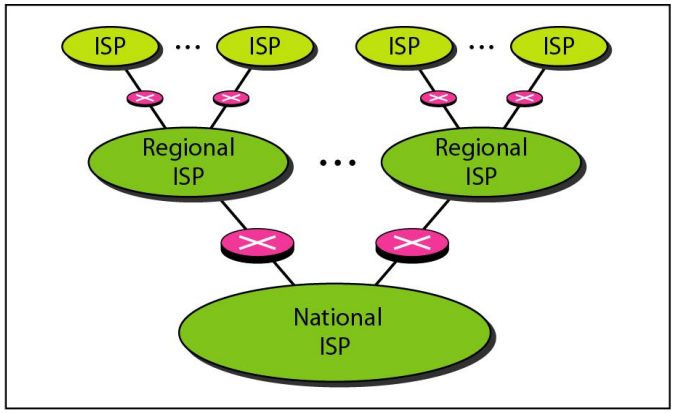

a. Structure of a national ISP

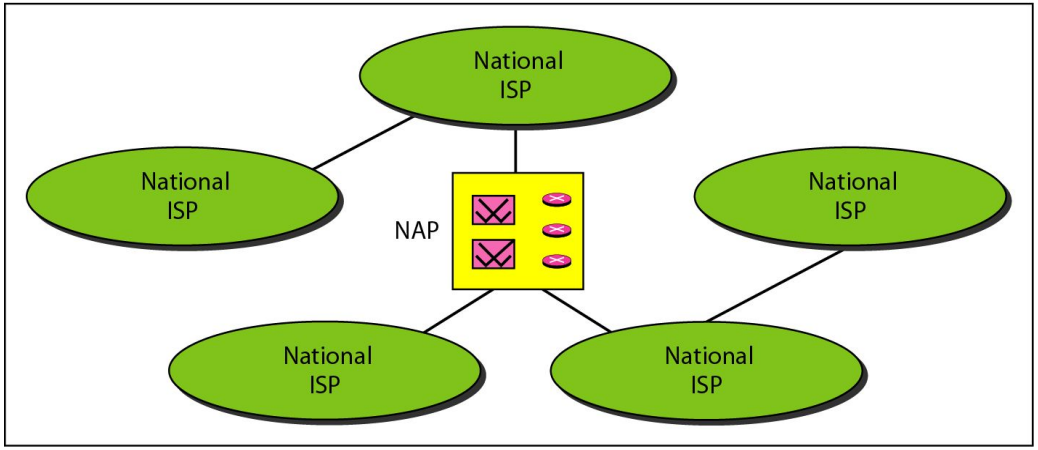

b. Interconnection of national ISPs

Layering & Protocol Stacks

What's a protocol?

human protocols:

- "what's the time?"
- "I have a question"
- introductions

… specific msgs sent

… specific actions taken when msgs received, or other events

network protocols:

- machines rather than humans
- all communication activity in Internet governed by protocols

Protocol

- *protocols define format, order of msgs sent and received among network entities, and actions taken on msg transmission, receipt*

a human protocol and a computer network protocol:

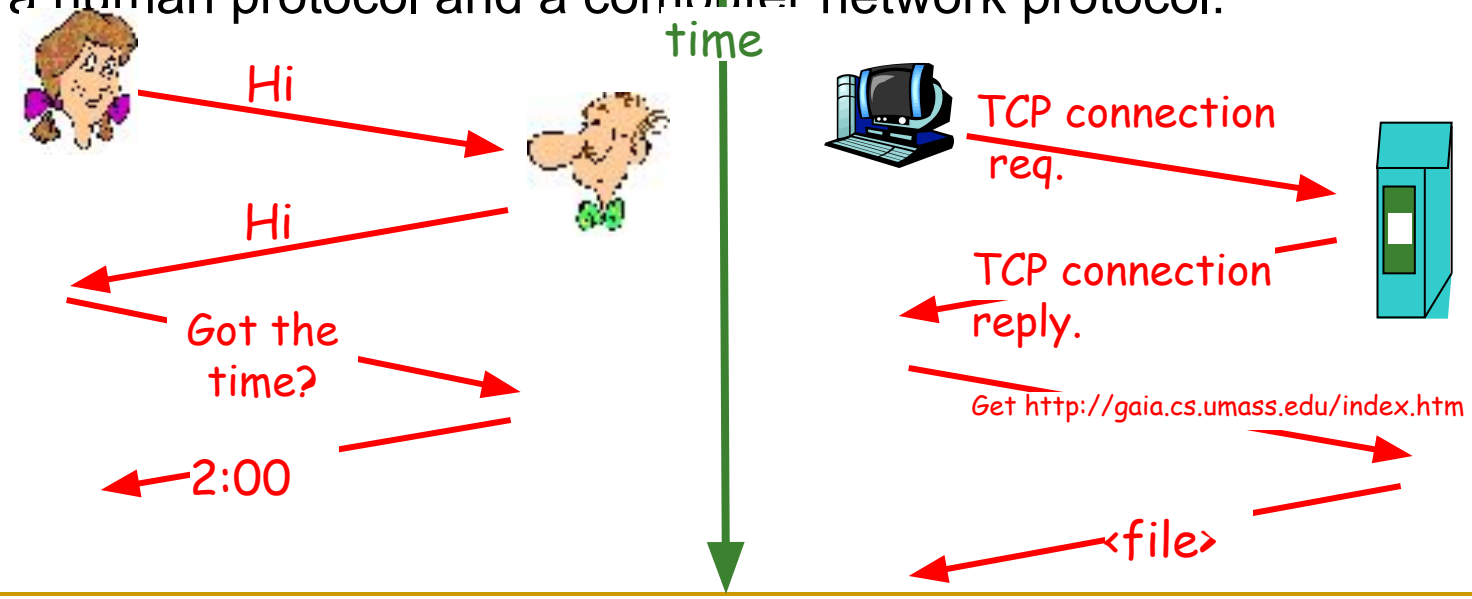

Standard

- Essential in creating and maintaining an open and competitive market for equipment manufacturers
- Guaranteeing national & international interoperability of data & telecommunication technology & process.

Layered Tasks

An example from the everyday life

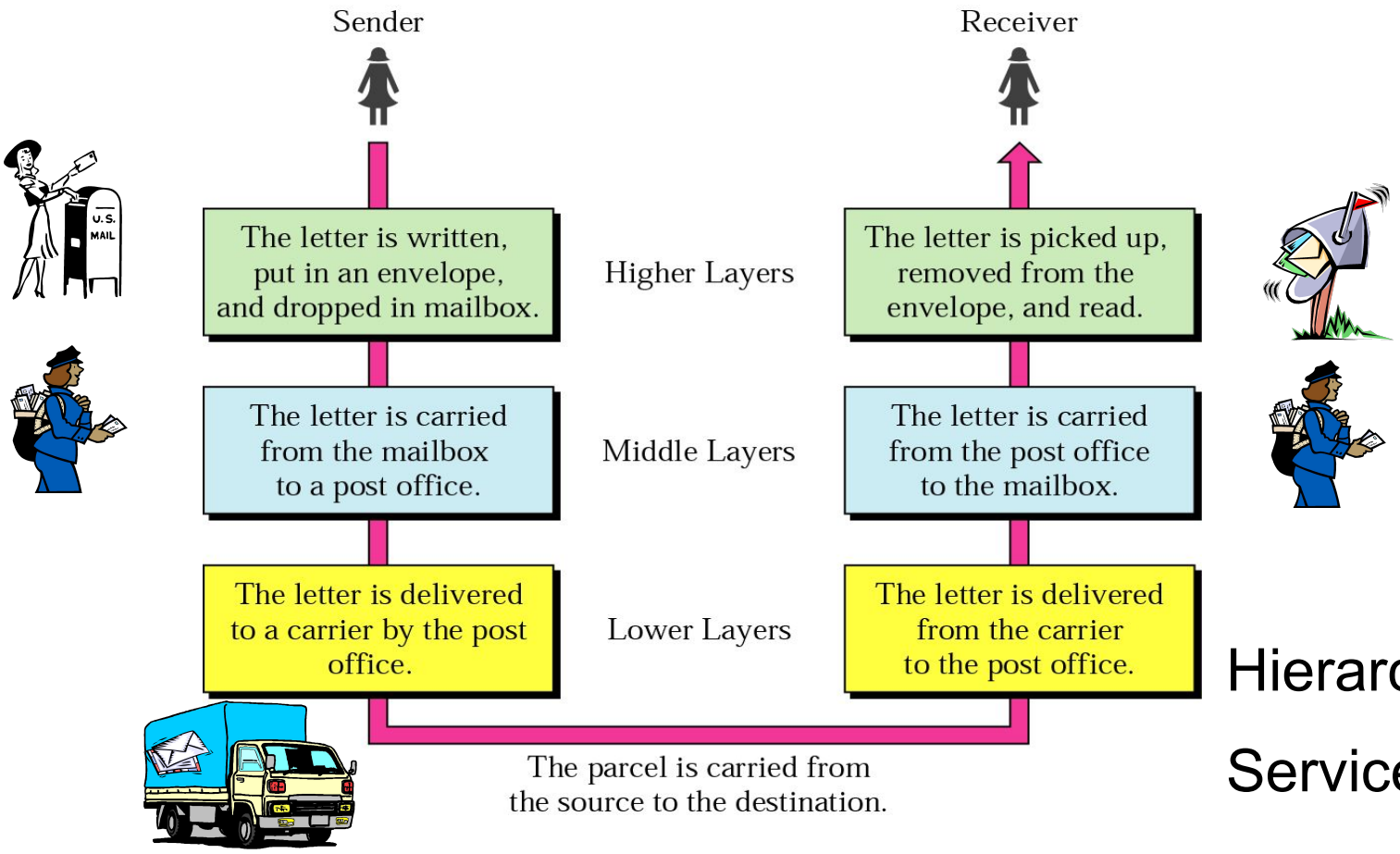

Hierarchy?

Services

Why layered communication?

- To reduce complexity of communication task by splitting it into several layered small tasks
- Functionality of the layers can be changed as long as the service provided to the layer above stays unchanged
  - makes easier maintenance & updating

- Each layer has its own task
- Each layer has its own <u>protocol</u>

Reference Models

- OSI reference model
- TCP/IP

OSI Reference model

- Open System Interconnection
- 7 layers

1. Create a layer when different abstraction is needed
2. Each layer performs a well define function
3. Functions of the layers chosen taking internationally standardized protocols
4. Number of layers – large enough to avoid complexity

Seven layers of the OSI model

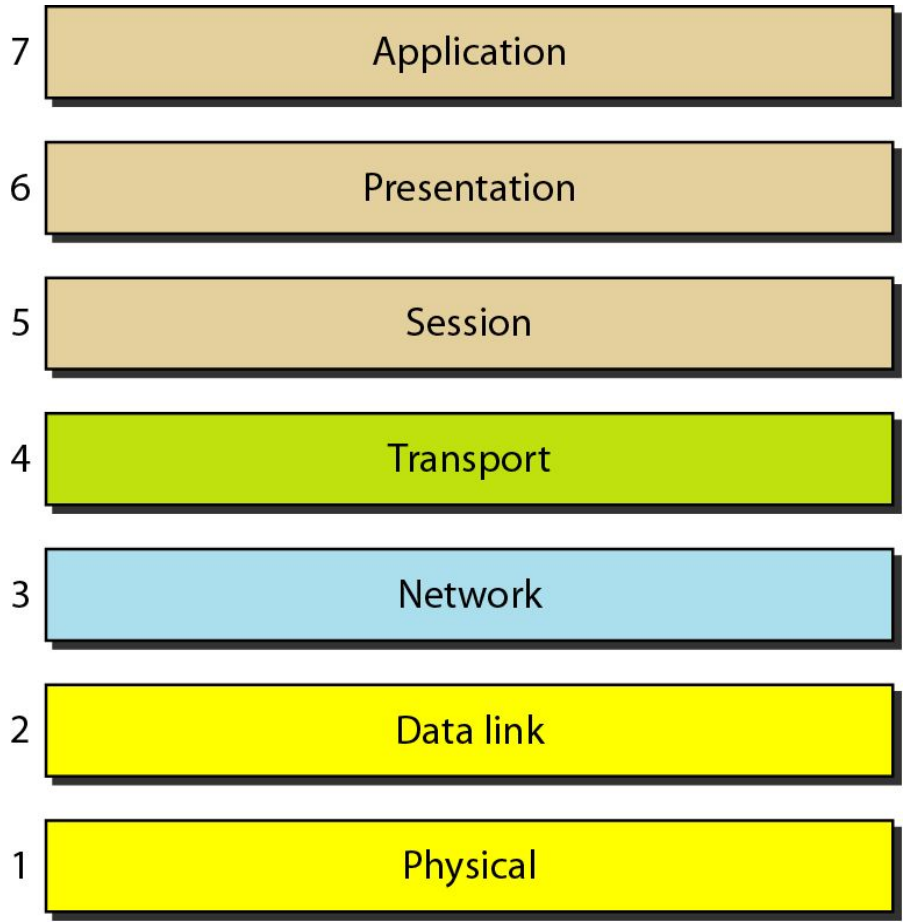

Exchange using OSI Model

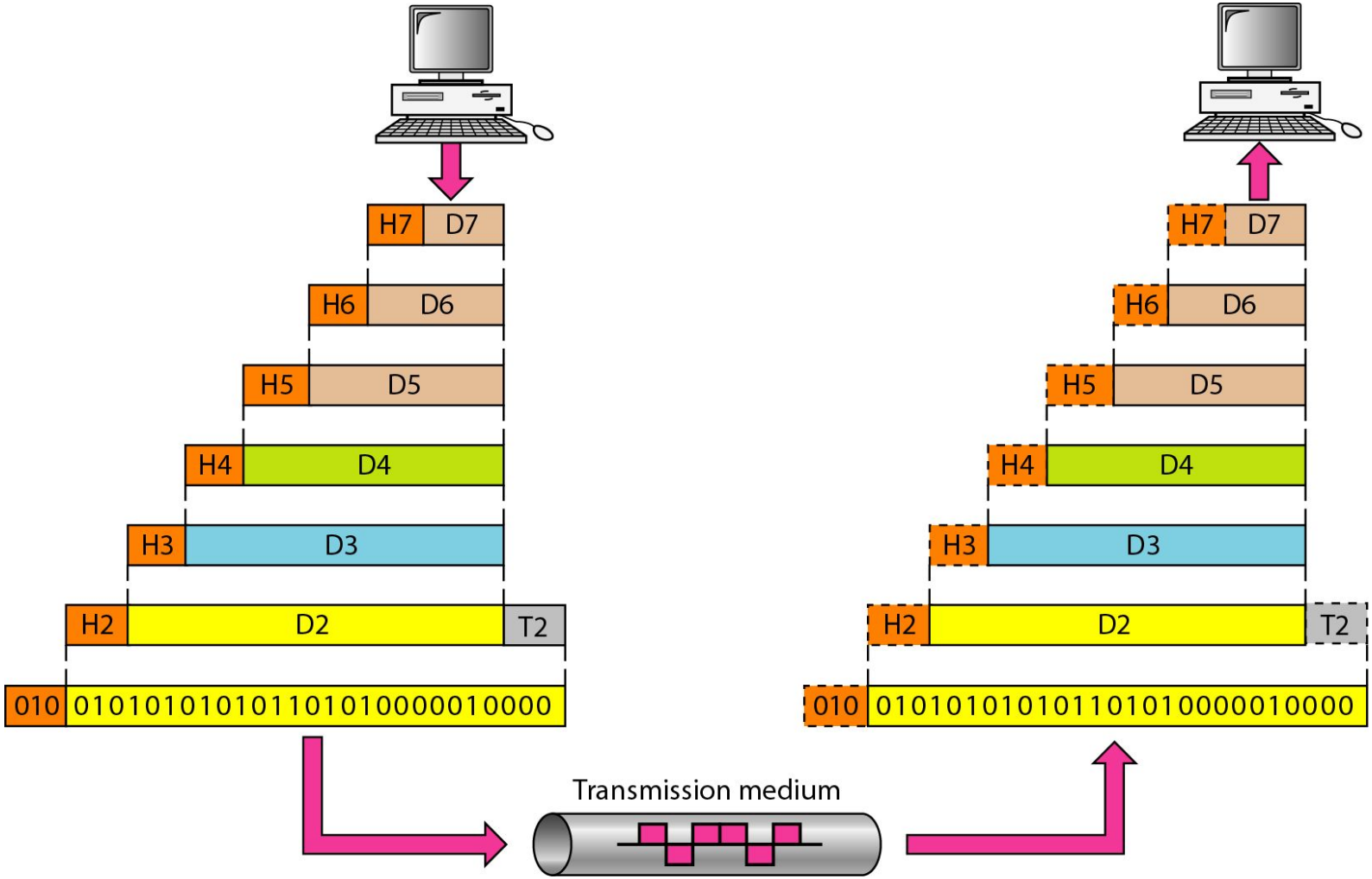

The interaction between layers in the OSI model

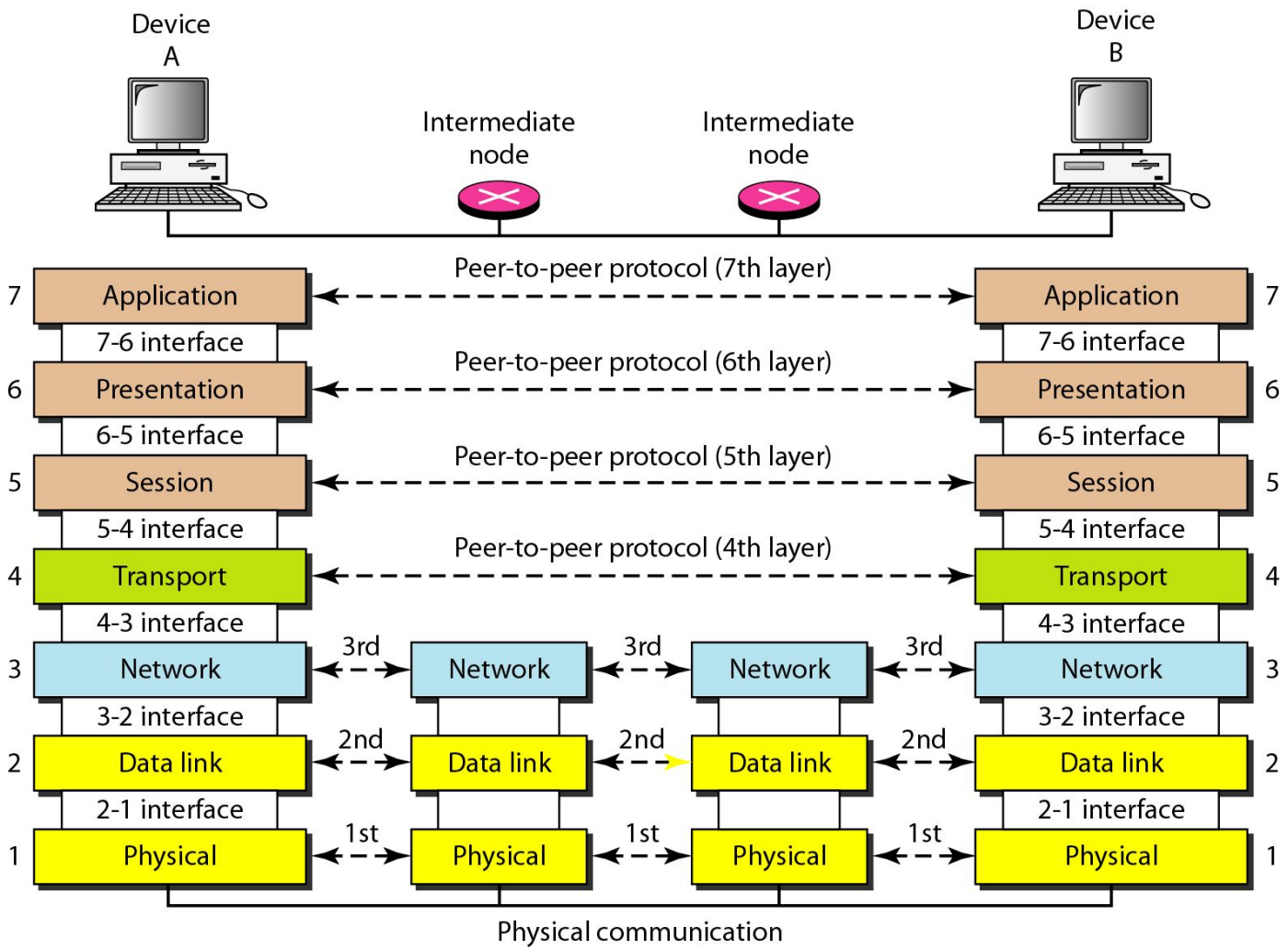

Issues, to be resolved by the layers

- Larger bandwidth at lower cost
- Error correction
- Flow control
- Addressing
- Multiplexing
- Naming
- Congestion control
- Mobility
- Routing
- Fragmentation
- Security
- ....

OSI Layers

Physical layer

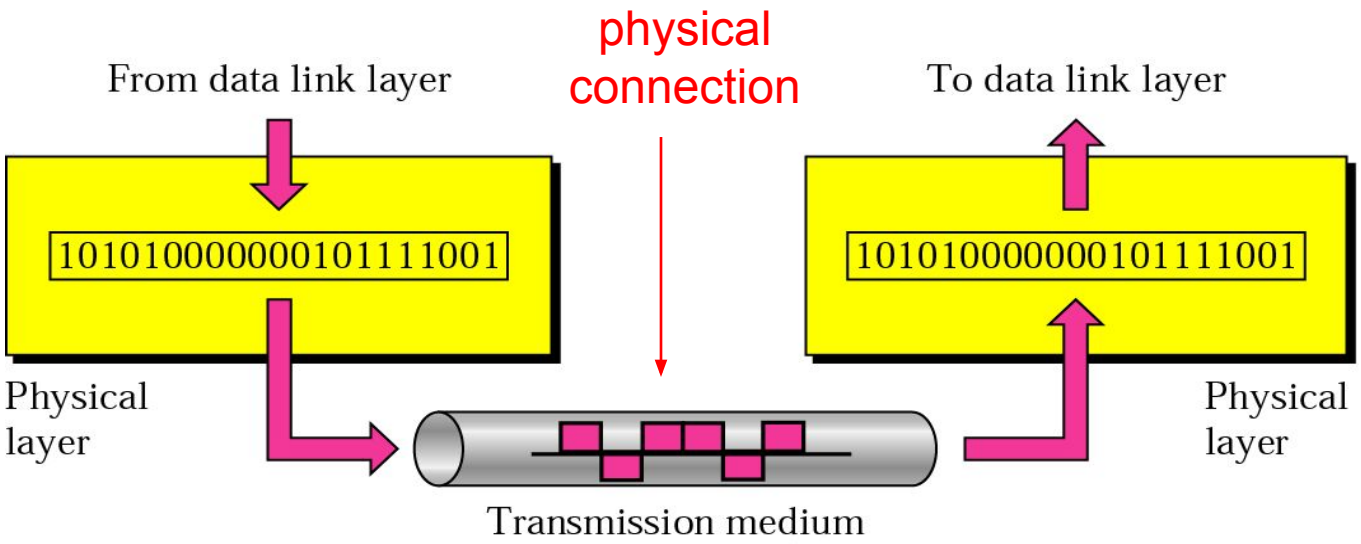

Transporting bits from one end node to the next

- type of the transmission media (twisted-pair, coax, optical fiber, air)
- bit representation (voltage levels of logical values)
- data rate (speed)
- synchronization of bits (time synchronization)

Note

The physical layer is responsible for movements of individual bits from one hop (node) to the next.

Data Link layer

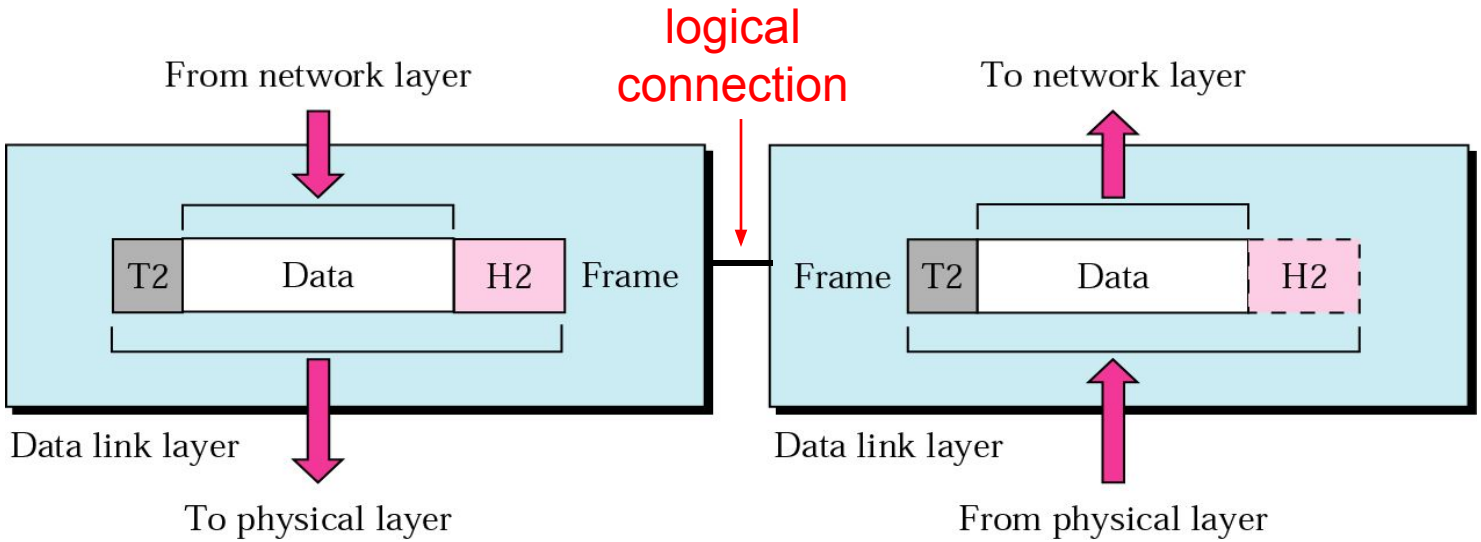

Transporting frames from one end node to the next one

- framing
- physical addressing
- flow control
- error control
- access control

Data Link layer
- hop-to-hop delivery-

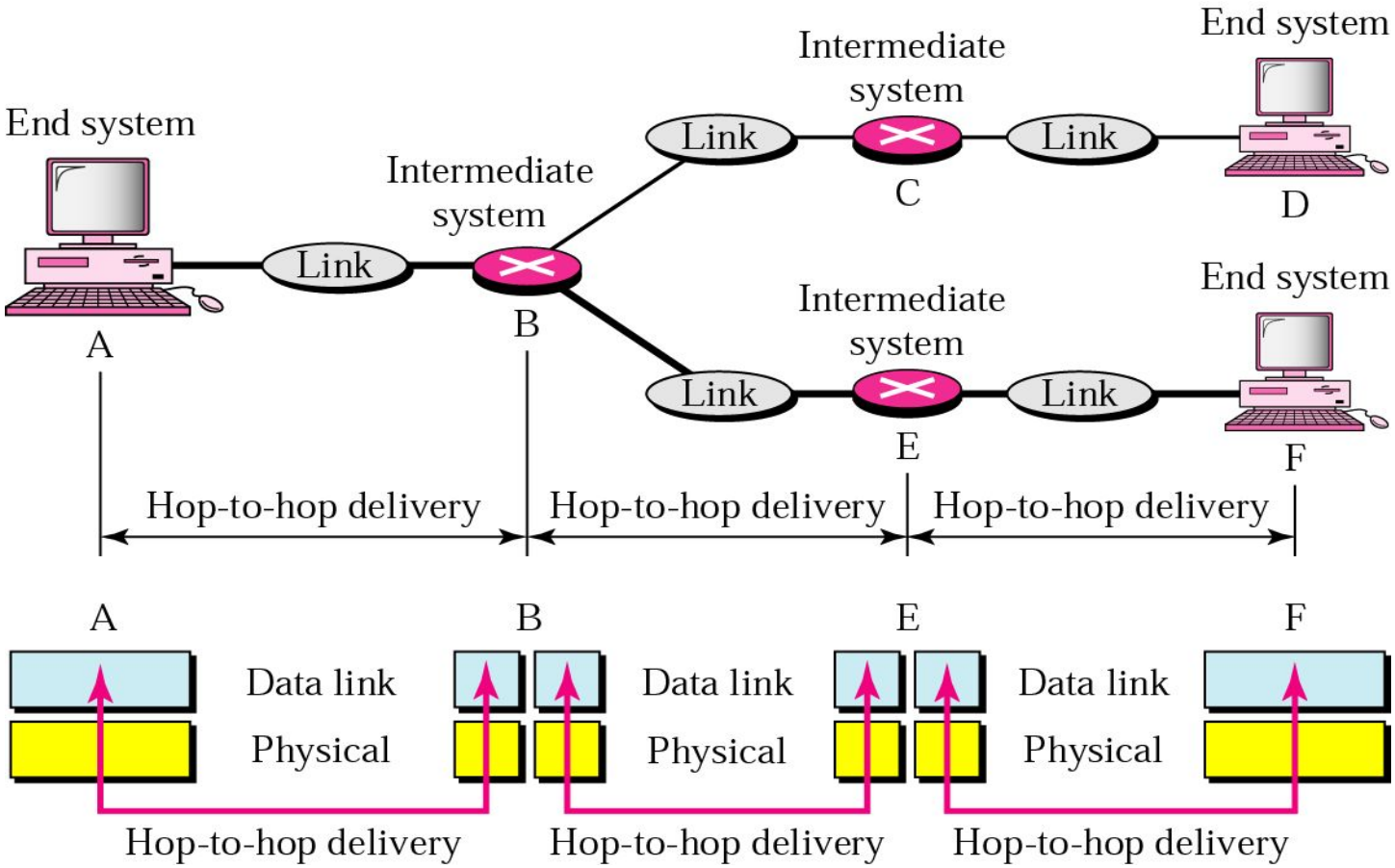

Data Link layer

- example-

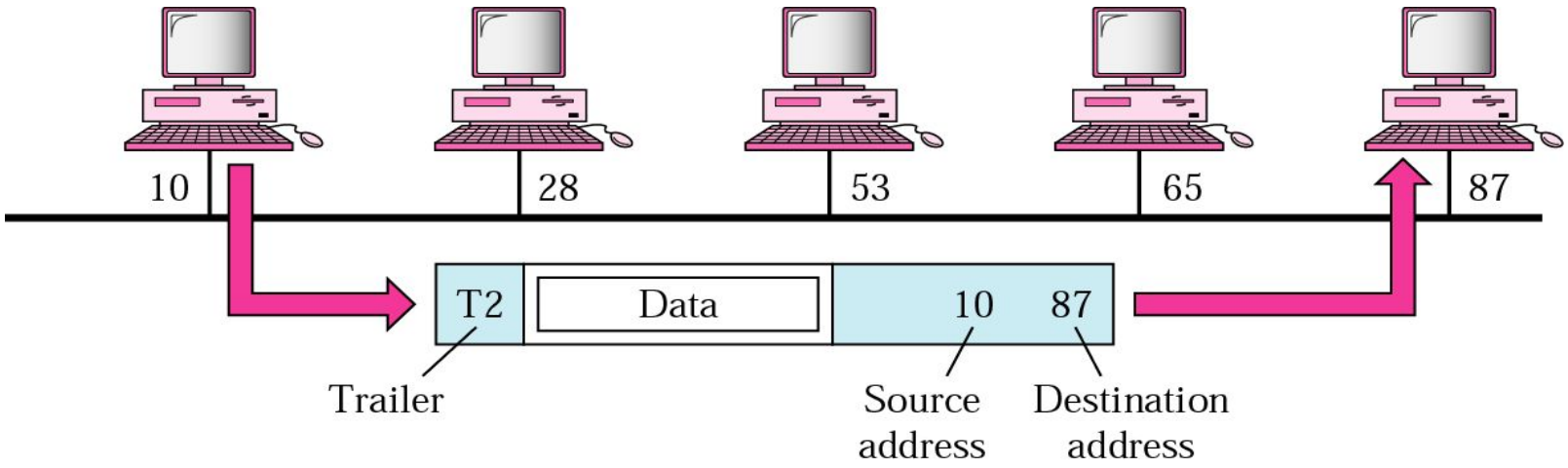

Note

The data link layer is responsible for moving frames from one hop (node) to the next.