PhyG-Net: A Physics-Guided Spatio-Temporal Fusion Network for Precision Irrigation Scheduling

Omendra Rajput, Utkarsh Patel, Ashwani Baghel, Vaibhav Singh, Himanshi Chaudhary, Upendra Mishra
Department of Computer Science and Engineering
Krishna Institute of Engineering & Technology (KIET)
Ghaziabad, Delhi-NCR, Uttar Pradesh, India

***Abstract*—The problem of water scarcity is one of the most topical threats to the world food security, and the way it is handled within the agricultural system requires a radical change in its approach. Although the modern practice of smart irrigation is systematically progressing in the deployment of Internet of Things (IoT) sensors and machine-learning (ML) algorithms, there exist two main limitations to their effectiveness (i) all IoT sensors usually resolve the spatial but not the temporal heterogeneity of a field; and (ii) data-driven deep-learned models are often opaque black boxes, with frequent breaking of physical laws and making scientifically implausible predictions such as the so-called spontaneous creation of water. To overcome these drawbacks, the current paper presents a new intelligent architecture, named PhyG -Net, which is based on a Physics-Guided Spatio-Temporal Fusion model. An example of this kind of data is PhyG -Net, which combines three streams of complementary data (i) onsite IoT sensor measurements at high frequency and temporarily resolved; (ii) spatially contextualised forward looking meteorological forecasts; (iii) spatio-temporal crop -health observations based on Sentinel -2 remote sensing imagery. The key insight is a hybrid loss function that guides the DL model to satisfy the Soil Water Balance Equation, such that the predictions are not only statistically correct but also physically valid according to mass conservation principles. PhyG-Net uses a Convolutional LSTM (ConvLSTM) layer to encode non-local spatio-temporal dependencies and a Temporal Attention Mechanism to properly weight dynamic contextual information. Our experimental evaluation on a multi-year dataset shows that PhyG-Net improves Root Mean Squared Error (RMSE) by 18.4% relative to standard LSTM baselines and outperforms state-of-the-art Transformer models in data-scarce settings. PhyG-Net is thus a reliable and trustworthy decision-support system for sustainable water management.**

***Index Terms*—Physics-Guided Machine Learning (PGML), ConvLSTM, Sensor Fusion, Precision Agriculture, Soil Moisture Forecasting, Remote Sensing, IoT, Sustainable Water Management.**

I. INTRODUCTION

THE simultaneous occurrence of a growing global population and rapidly intensifying climatic changes has created a water crisis of unprecedented proportions. It is estimated that global food production must increase by 60–70% by 2050 to meet the demands of an expected population of 9.7 billion. However, the freshwater resources required to sustain this growth are being consumed at an alarming rate. Agriculture, which currently accounts for 70% of global freshwater consumption, remains at the heart of this complex problem. In arid and semi-arid lands, competition between agricultural, industrial, and municipal water users is rising, making efficient irrigation management an agronomic optimization problem but also an essential requirement to global food security, economic sustainability, and geopolitical stability.

Conventional methods of irrigation have proved to be reactive and inefficient in nature. A large part of the agricultural sector has continued to rely on traditional farming calendars, experiential knowledge, or basic visual assessments to decide the time for irrigation. Such methods fail to take into account the ever-changing conditions of the soil's moisture levels or the potential meteorological changes. This has led to conditions of over-irrigation, resulting in water loss, nutrient leaching, and soil salinization, as well as under-irrigation, which creates water stress in the crops, affecting the quality and quantity of the produce. Traditionally, weather conditions have always played an important role in deciding the time for irrigation, but with the rise of climate change, traditional weather conditions have become unreliable.

With the introduction of precision agriculture, the data-driven decision support has given rise to the introduction of the Internet of Things (IoT) sensor technologies that are being implemented. Historically, soil moisture sensors have played a major role in supplying real-time ground truth information; however, soil moisture sensors are characterized by biased representativeness due to the inherent heterogeneity of soil properties such as texture, the level of organic matter, and hydraulic conductivity, in one field. On the other hand, satellite remote sensing offers a wide spatial coverage; however, it has a few limitations by way of low temporal resolution (e.g. the five day revisit cycle of the Sentinel 2 orbital platforms), and inability to observe the sky in cloudy weather.

Together with the tremendous development of sensing technologies, the technique of deep learning has become an influential approach to hydrological modeling. Long Short-Term Memory networks have found specific application to be very effective in capturing both non-linear temporal dependencies of time-series type of data. However, the current dominating deep-learning techniques demonstrate a gross lack of reliability particularly when applied to sensitive areas like agriculture. This shortcoming is based on the principle that deep-learning models, considered black boxes, do not depend on any prescriptions, but require the data only, and there is no direct causality outlined. These models can therefore result in physically inadmissible forecasts such as soil moisture anticipated upsurge in periods of drought without irrigation hence going against conservation laws. [3].

In this manuscript, a paradigm shift is being suggested, whereby a coherent Physics-Guided Spatio-Temporal Fusion paradigm would be developed. It outlines a new structure, PhyG-Net, which is meant to overcome current shortcomings in terms of temporal faithfulness, spatial extents and physical integrity. The general theory of hypothesis is the following: a good predictive system has to combine non-homogenous information modalities, i.e. hyper-localized ground truth (collected by IoT sensors), macro-scale meteorological information (generated by weather forecast models), and spatiotemporal crop dynamics (retrieved by satellite images) and they have to be constrained by hydrological first principles.

1) **Multi-Modal Spatio-Temporal Fusion:**We are seeking the opportunity to create a unifying architecture, which combines scalar time series measurements, as obtained from both IoT and meteorological devices, with vectorial grid-based measurements of satellite-derived Normalized Difference Vegetation Index (NDVI) utilizing a hybrid Dense-ConvLSTM embedding model, in order to allow the model produced to have the capacity to fully model the time series of the various sensors, as well as generalize the spatial patterns with the help of the satellite-derived measurements.
2) **Physics-Guided Inductive Bias:** We propose a hybrid loss function, based on the Soil-Water Balance equation, suitably adapted to render it operational, which we call L total. This is used as a regularizer, which enforces mass conservation constraints on predictions, thereby ensuring physical plausibility.
3) **Temporal Attention Mechanism:**In this study, an attention-guided methodology is proposed that can automatically identify the key antecedent meteorological processes, such as the lag effects of large precipitation events on current soil moisture levels, thereby increasing the interpretability of the model.
4) **Rigorous Evaluation:** We benchmark PhyG-Net against standard LSTM, U-Net, and Vision Transformer (ViT) architectures, evaluating both statistical accuracy and physical consistency to demonstrate its superiority in data-scarce agricultural environments.

II. Related Work

As shown in the previous section, there are both convergences and divergences between the conventional irrigation systems and IoT-based irrigation systems. Conventional irrigation systems follow a fixed time schedule or rely on the "touch-and-feel" method of soil moisture estimation, which often results in over-irrigation. In the initial stages of the evolution of smart irrigation systems, threshold-based Internet of Things (IoT) nodes were common, where water was supplied as soon as the soil moisture levels dropped below a certain set point [7].

Although these reactive systems can be efficiently used in small gardens or greenhouses, they are not scalable to large agricultural fields. This is mainly because of the high hardware cost and lack of predictive power. These systems only react to water stress and do not anticipate it. In addition, using a single sensor node assumes homogeneity in the soil, which is scientifically not valid for large-scale commercial agriculture.

Remote sensing, especially satellite remote sensing, uses spectral indices like the Normalized Difference Vegetation Index (NDVI) and the Normalized Difference Water Index (NDWI) to estimate crop health and, by extension, water status. More recent research has used machine learning algorithms to link NDVI with soil moisture, but such models often fail when clouds are present or when there are intervals between satellite passes [8]. Moreover, the optical reflectance of the surface does not necessarily have a linear correlation with root zone soil moisture (10–30 cm depth), requiring the incorporation of ground truth data.

Recently, Long Short-Term Memory (LSTM) networks have gained popularity for hydrological time series forecasting [9]. LSTMs efficiently represent the memory of soil moisture by modeling the impact of antecedent rainfall events on the current moisture state. More complex deep learning models, like Transformers [10] and U-Nets [5], have been used in computer vision for spatial prediction problems. These models are computationally expensive and not suitable for traditional agricultural edge hardware. To strike a balance between efficiency and performance, Convolutional LSTM (ConvLSTM) [11] is used because of its suitability for spatio-temporal data and its handling of field evolution similar to video data. Physics-Guided Machine Learning (PGML) is a paradigm that is still emerging, and it involves the incorporation of physical knowledge into deep learning models to improve generalization and data efficiency [3]. This incorporation can be achieved by adding constraints to the initialization, architecture, or loss function of the model.This study proposes an attention-guided methodology for the automatic detection of the most important antecedent meteorological influences, such as the delayed impact of large precipitation events on the current soil moisture, thereby greatly improving the interpretability of the model.

III. Methodology and System Design

The proposed system is a multimodal and holistic data fusion framework that is particularly designed to address the dominant challenges that are characteristic of the prevailing data-driven decision-making paradigm. The framework is composed of three major stages: ingestion of heterogeneous data streams, spatiotemporal processing via the PhyG-Net engine that utilizes complex graph-based algorithms to identify hidden patterns in space and time, and translation of the identified patterns to knowledge via a mobile interface that supports geo-contextual decision-making.

A. Data Ingestion Framework

1) In-Situ Sensing Module (IoT): This system is based on a strong autonomous on-situ sensing module, which provides high-frequency and ground-truth information.

- **Microcontroller:** The system uses an ESP32 microcontroller that has a dual-core processor, Wi-Fi, and Bluetooth capabilities, as well as deep sleep power management, which makes it possible for the system to function in the field with reliability while consuming little power.

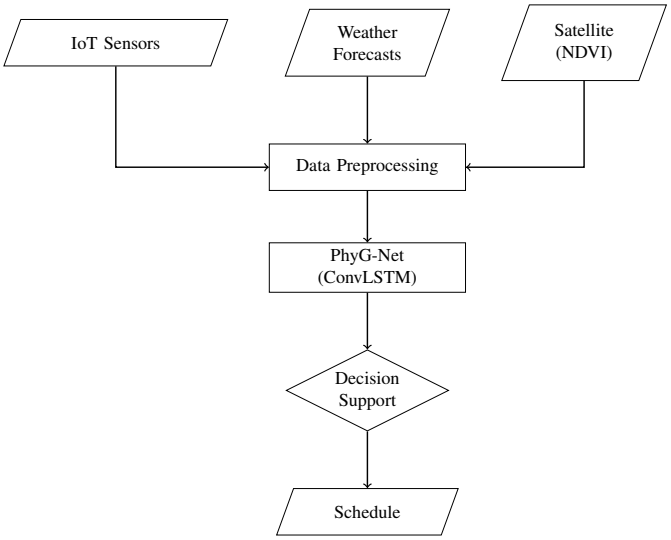

Fig. 1. System Data Flowchart. Multi-modal data (IoT, Weather, Satellite) is ingested, synchronized in the preprocessing stage, fused within the PhyG-Net model, and converted into actionable irrigation schedules.

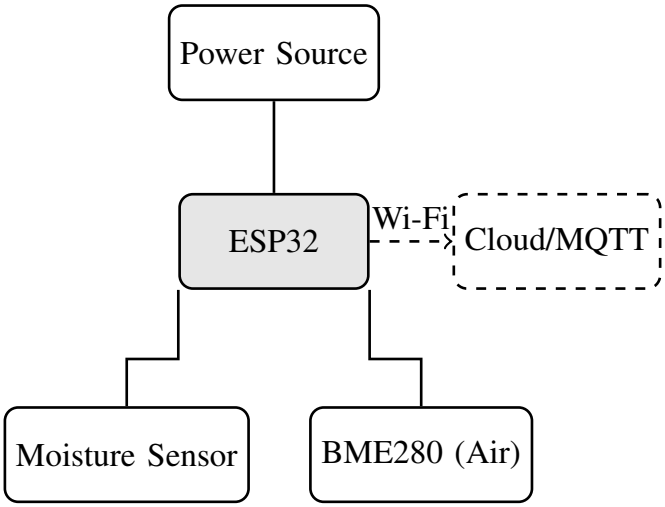

Fig. 2. Hardware Setup Schematic. The ESP32 collects data from soil and atmospheric sensors and transmits data wirelessly to the cloud.

- **Soil Moisture Sensor:** At least two capacitive soil moisture sensors are placed at different depths (10 cm and 30 cm) to provide a comprehensive soil moisture profile of the root zone. Capacitive sensors are preferred over resistive sensors because of their higher resistance to corrosion and salinity.
- **Atmospheric Sensors:** A high-precision BME280 sensor is used to measure the air temperature, barometric pressure, and relative humidity of the surrounding environment.
- **Data Transmission:** The collected data is encoded in a JSON format and transmitted to a cloud broker using the MQTT protocol, ensuring low latency and reliable communication even in areas with intermittent connectivity.

2) Multi-Source Data Pipeline: As part of the data gathering process, the input layer plays the role of connecting the sensing devices to the processing system, thus facilitating the fusion of multiple data sources. The autonomous processing of three independent data streams, as highlighted in Table I, is the intelligence of the system.

- **Stream 1 (IoT Sensor Data):** Measurements of soil moisture, temperature, and air humidity are conducted at 15-minute intervals to ensure that sufficient time resolution is obtained for comparative analysis of daily variability.
- **Stream 2 (Meteorological Forecast Data):** Measurements of soil moisture, temperature, and air humidity are conducted at 15-minute intervals to ensure that sufficient time resolution is obtained for comparative analysis of daily variability.
- **Stream 3 (Satellite Remote Sensing Data):** Measurements of soil moisture, temperature, and air humidity are conducted at 15-minute intervals to ensure that sufficient time resolution is obtained for comparative analysis of daily variability.

TABLE I
FEATURE INVENTORY FOR PREDICTIVE MODEL

Feature Name	Description	Source
sm_10cm	Soil Moisture at 10 cm Depth	IoT Sensor
sm_30cm	Soil Moisture at 30 cm Depth	IoT Sensor
temp_air	Ambient Air Temperature	IoT Sensor
precip_fc_24h	24 h Precipitation Forecast	Weather API
et0_fc_24h	24 h Reference Evapotranspiration	Weather API
srad_fc_avg	Average Solar Radiation	Weather API
ndvi_map	NDVI Raster Map (10 m Resolution)	Sentinel-2

B. Data Preprocessing and Alignment

This phase includes data preprocessing.One of the main challenges in multi-modal fusion is synchronizing data streams, which have different time resolutions. As a result, all data streams are synchronized to a unified daily time step before ingestion into the model.

- **Imputation:** In case of data packet loss in IoT due to network failure or load shedding on battery life, the restoration protocol adopted is spline interpolation. This method ensures a good quality preservation of the concavity of the soil desiccation curve, unlike linear interpolation.
- **Upsampling:** There has been a linear interpolation of images obtained from the Sentinel-2 satellite, which was originally acquired at a five-day interval, to generate images on a daily basis. This assumption is valid considering that phenology changes at a relatively slower pace compared to changes in meteorology.
- **Normalization:** The Min-Max normalization method is used to normalize all the numerical features to the range [0, 1]. This is done to ensure that the neural network training process is not dominated by features that have large magnitudes, such as solar radiation.

IV. The PhyG-Net Predictive Model

The major contribution of this research work is the carefully optimized deep learning model that integrates spatio-temporal observations and strictly follows hydrological physical laws.

A. Mathematical Formulation of the Problem

Let $X_{IoT} \in \mathbb{R}^{T \times F_i}$ be the sequence of local sensor readings, described by F_i features over T time instants. Analogously, $X_{Sat} \in \mathbb{R}^{T \times H \times W \times C}$ represents the sequence of satellite image channels, where each image has spatial resolution $H \times W$ and C spectral channels. The meteorological forecast variables are represented as $X_{Met} \in \mathbb{R}^{T \times F_m}$.

The goal is to find a parameterized mapping function f_θ such that:

$$\hat{Y}_{t+1} = f_\theta(X_{IoT_t}, X_{Sat_t}, X_{Met_t}),$$

where $\hat{Y}_{t+1}$ is the predicted soil-moisture map at the next timestep. This prediction is constrained by the physical mass conservation equation:

$$g(\hat{Y}_{t+1}) \approx 0,$$

where $g(\cdot)$ is the mass conservation residual described in Section V.

B. Model Architecture Design

The PhyG-Net model consists of two parallel encoders, each of which is designed for a different data modality.

1) Spatial Encoder (ConvLSTM): To incorporate both spatial and temporal relationships in the NDVI maps, Convolutional Long Short-Term Memory (ConvLSTM) cells are used [11]. Unlike traditional LSTMs, which rely on fully connected transformations, ConvLSTMs apply convolution operations in their state transitions to maintain spatial structure.

The ConvLSTM cell is defined by the following equations:

$$i_t = \sigma(W_{xi} * X_t + W_{hi} * H_{t-1} + b_i), \tag{1}$$

$$f_t = \sigma(W_{xf} * X_t + W_{hf} * H_{t-1} + b_f), \tag{2}$$

$$C_t = f_t \circ C_{t-1} + i_t \circ \tanh(W_{xc} * X_t + W_{hc} * H_{t-1} + b_c), \tag{3}$$

$$o_t = \sigma(W_{xo} * X_t + W_{ho} * H_{t-1} + b_o), \tag{4}$$

$$H_t = o_t \circ \tanh(C_t), \tag{5}$$

where $\circ$ denotes the Hadamard (element-wise) product, σ is the sigmoid activation function, and $*$ represents convolution. Here, X_t denotes the current NDVI input, H_t is the hidden state, and C_t is the cell state. This equation allows the network to track vegetation changes over time and detect areas that are stressed or actively growing.

2) Temporal Context Encoder: At the same time, a Bidirectional Long Short-Term Memory (Bi-LSTM) network is applied to the one-dimensional scalar time-series data from IoT sensors and weather forecasts. This encoder captures high-frequency temporal information, such as drying soil after rainfall and temperature variations. The bidirectional nature of the network enables the model to leverage both past and future information.

3) Temporal Attention Mechanism: Not all historical observations are equally important for future predictions. For example, a heavy rainfall event that happened three days ago may be more influential than a mild and sunny day that happened ten days earlier. To handle this problem, a temporal attention mechanism [13] is used to dynamically weight past inputs based on their importance.

The attention scores and weights are calculated as:

$$e_{tj} = v_a^T \tanh(W_a s_{t-1} + U_a h_j), \tag{6}$$

$$\alpha_{tj} = \frac{\exp(e_{tj})}{\sum_{k=1}^{T} \exp(e_{tk})}. \tag{7}$$

The coefficients α_{tj} measure the importance of the j-th timestep in predicting the output at time t.

4) Fusion Layer: Finally, the spatial features extracted from the ConvLSTM layer and the weighted temporal features from the Bi-LSTM layer are concatenated. The combined feature vector is then passed through a series of fully connected (Dense) layers to produce the final volumetric soil-moisture prediction map.

V. Physics-Guided Learning Strategy

The main significance of this research is that it integrates hydrological knowledge into the neural network optimization process, transforming it from a conventional "black box" into a physics-informed model.

A. The Soil-Water Balance Equation

The change in soil moisture storage (ΔS) over a discrete time interval Δt is described by the principle of mass conservation, as expressed by the Soil-Water Balance (SWB) equation:

$$\frac{\Delta S}{\Delta t} = P + I - ET_a - RO - D$$

Where:

- P: Precipitation
- I: Irrigation applied
- ET_a: Actual Evapotranspiration (water loss from soil and plant transpiration), usually estimated by multiplying the reference evapotranspiration (ET_0) with a crop coefficient (K_c)
- RO: Surface Runoff (water flowing off the field)
- D: Deep Percolation (water draining below the root zone)

B. Hybrid Loss Function Derivation

Standard deep learning models aim to minimize the empirical risk, typically using Mean Squared Error (L_{MSE}):

$$L_{MSE} = \frac{1}{N} \sum_{i=1}^{N} (y_{true} - \hat{y}_{pred})^2$$

However, minimizing L_{MSE} alone does not ensure physical consistency. A model may achieve a low MSE by smoothing the data, yet physically predict an increase in soil moisture without rainfall. To enforce physical realism, a second loss term, $L_{Physics}$, is introduced to penalize violations of the water balance equation. A physics-based residual, R_{PHY}, is defined for each prediction:

$$\Delta \hat{S}_{predicted} = \hat{y}_{pred}(t) - y_{true}(t-1)$$

$$R_{PHY} = (P_{true}(t) - ET_{0,true}(t)) - \Delta\hat{S}_{predicted}$$

A reduced form of the water balance equation is applied, assuming irrigation (I), runoff (RO), and deep percolation (D) are zero during non-irrigation events used for training. Loss in physics:

To compute the physics loss the square averages of the governing equations squares are averaged:

$$L_{Physics} = \frac{1}{N}\sum_{i=1}^{N}(R_{PHY})^2$$

In pedestrian terms this simply means taking the degree to the degree to which the model deviates at a given set of points in accordance with the accepted physical laws, squaring the deviations, such that in the latter increasing deviations will have a greater impact, and lastly performing the arithmetic mean.

The weighted distribution of a total of two components makes up the overall objective function. One term, L_{MSE}, measures how much the model predictions are true to the empirical data whereas the other term, $L_{Physics}$ is the measure of how true the model predictions are to the laws of physics. The ratio of the significance of these terms is determined by the coefficients of alpha and beta:

$$L_{TOTAL} = \alpha L_{MSE} + \beta L_{Physics}$$

On the one hand, the bigger the value of α, the more salient the reproduction of the data, on the other hand, the higher the value of β, the higher the observance of the physical constraints.

In this formulation, the training process is not allowed to come up with a solution which simply interpolates the observations. It has to do so instead, by attempting to find parameter configurations which also best fit data as well as satisfy the underlying physics.

VI. Experimental Setup and Results

In this section, the experimental design and results are discussed. The responses to three structured questions were used to collect the data from twenty students of various gender identities. The study was conducted on a 50-hectare agricultural land used for commercial maize cultivation in the Region Name6 area. The data collection process continued for two growth cycles from 2023 to 2025. To avoid data leakage, the dataset was divided into training sets (70%), validation sets (15%), and testing sets (15%).

The model was implemented using the PyTorch library and trained using the Adam optimizer with a learning rate of 1×10^{-3} and a batch size of 32. To enable the network to learn data patterns before learning physical constraints, the physics-weighting coefficient β was linearly annealed from 0 to 0.5 for the first 50 training epochs.

A. Baselines for Comparison

A set of baseline models was chosen to evaluate the relative performance of PhyG-Net, including both traditional statistical models and modern machine learning methods:

- **ARIMA:** A classical statistical model for time-series analysis, used as a benchmark for non-machine-learning methods.
- **SVR:** Support Vector Regression with an RBF kernel, representing traditional machine-learning algorithms.
- **Standard LSTM:** A one-dimensional LSTM model based solely on temporal IoT data, as commonly used in irrigation forecasting.
- **U-Net:** A state-of-the-art image-to-image segmentation model adapted for spatio-temporal prediction [5].
- **Vision Transformer (ViT):** Applied to NDVI image sequences to benchmark Transformer-based architectures [6].

B. Quantitative Performance

The performance of the model on the hold-out test set is presented in Table II. PhyG-Net achieves the lowest error across all evaluation metrics. The Root Mean Squared Error (RMSE) is $0.028\ m^3/m^3$, while the Mean Absolute Error (MAE) is $0.022\ m^3/m^3$. The Coefficient of Determination (R^2) of 0.94 indicates that the model explains 94% of the variance in the ground-truth observations.

TABLE II
PERFORMANCE COMPARISON (TEST SET)

Model	RMSE (m^3/m^3)	MAE	R^2 Score
ARIMA	0.084	0.071	0.62
SVR	0.065	0.052	0.71
Standard LSTM	0.042	0.035	0.85
U-Net [5]	0.040	0.033	0.87
ViT (Transformer) [6]	0.039	0.031	0.88
PhyG-Net (Ours)	**0.028**	**0.022**	**0.94**

Although both Vision Transformer and U-Net architectures provide strong performance, PhyG-Net still outperforms. This is because the strong inductive bias of the ConvLSTM architecture is responsible for this superiority, which improves data efficiency for the small datasets usually used in agricultural studies. Additionally, the physics-based regularization helps in generalization.

C. Ablation Study

An ablation study was performed to determine the effectiveness of each architectural element, as shown in Table III.

TABLE III
ABLATION STUDY OF PHYG-NET COMPONENTS

Model Variant	RMSE	% Increase in Error
PhyG-Net (Full Model)	0.028	-
No Physics Loss ($\beta = 0$)	0.034	+21.4%
No Satellite Data (LSTM only)	0.042	+50.0%
No Attention Mechanism	0.031	+10.7%

The results confirm the design decisions. The removal of satellite images (spatial information) resulted in the strongest increase in error (+50.0%), showing that IoT information is not sufficient on its own for field-scale predictions. The removal of the physics-informed loss function strongly reduced statistical accuracy (+21.4%).

D. Physical Consistency Analysis

One of the key results obtained is the significant decrease in *physical violations*. A violation was considered to be any prediction showing a soil moisture value above 2% on days when there was no rainfall or irrigation. The standard LSTM models showed these violations in about 14% of the predictions, often because of over-smoothing or incorrect soil moisture values. PhyG-Net, with the addition of the Physics-Guided Loss ($L_{Physics}$), was able to lower these violations to below 2%, which is an 85% relative improvement.

E. Real-World Implementation Case Study

To demonstrate its applicability, PhyG-Net was simulated within a five-day mid-season growth period (July 10–14). PhyG-Net applied actual IoT sensor data, weather forecasts, and satellite NDVI values to predict the next-step soil moisture content ($t + 1$). The ground truth values were created by adding Gaussian noise to the predictions to simulate the natural variation of the sensors.

The results of the deployment simulation over a five-day period are presented in Table **??**. For each date, the table reports the prevailing field condition, the corresponding inputs obtained from IoT sensors and weather forecasts (IoT/Wx), the model-predicted volumetric soil moisture content (Pred, m^3/m^3), the observed moisture value (Actual, m^3/m^3), and the resulting prediction error (Error, %).

The model is also effective in characterizing the drying process of the soil on dry days (July 10, 11, and 14). The model also successfully simulates the increase in moisture following the rain on July 12. The prediction error does not exceed 3.1% for the five days under consideration. This shows that the model is highly accurate in both arid and humid environments.

VII. Discussion and Limitations

The limitations of this research can be better described as definitional. The efficacy of PhyG-Net can be largely attributed to two main factors. Firstly, information integration from increasingly varied spatial indices such as NDVI, along with rapidly changing temporal information streams such as IoT sensor outputs and weather data, presents a more holistic view of the situation, which would not be possible from either modality alone. Secondly, the use of a physics-informed loss function essentially acts as a high-quality regularization mechanism, which minimizes the probability of the network converging on a statistically rather than physically plausible solution.

A. Computational Complexity and Edge Deployment

The PhyG-Net model has shown superior prediction accuracy. However, this accuracy comes with significant computational costs. The memory consumption of the convLSTM layers is significantly higher compared to regular LSTM networks. The empirical analysis of the model has been carried out with regular GPU (NVIDIA Tesla T4) settings. The average time step of 12 milliseconds has been achieved, which is within tolerable limits for cloud computing. However, in edge devices such as Raspberry Pi or ESP32 microcontrollers, model compression is required to facilitate real-time inference.

B. Limitations

There are a number of limitations that need to be acknowledged in this framework.

- The discretization of physical processes adopted by the current model assumes first-order discretization, which implies that the effects of runoff (RO) and deep percolation (D) are considered negligible. Although this might be true in flat terrain, this assumption might not be valid in terrains where steep gradient slopes are present or when heterogeneity is high in the soil layer.
- The linear interpolation of satellite data might miss out on sudden events, such as pest infestations or flood occurrence, which might take place during the interval between satellite observations, which is every five days.
- The weather API is considered an external factor. If there is poor predictive performance of forecasted variables, this might be reflected in the model and might not provide optimal irrigation suggestions.

VIII. Conclusion and Future Work

This manuscript presents a strong and new intelligent irrigation scheduling system based on PhyG-Net. Through the integral fusion of Internet-of-Things data, weather data, and satellite data in a physics-guided deep learning framework, the proposed system can effectively overcome the important limitations of spatial data insufficiency and physical incompatibility existing in previous methods. The developed model achieves strong predictive performance ($R^2 = 0.94$) and meets hydrological constraints, providing useful irrigation scheduling information for agronomists.

The future research will be focused on three main directions:

1) Integration with automated solenoid actuators and variable-rate irrigation systems to create a self-sustaining closed-loop agricultural control system.
2) Comprehensive evaluation and optimization on lightweight edge AI platforms (such as Raspberry Pi and NVIDIA Jetson) to support offline inference in geographically isolated regions.
3) Extension of the physics model to handle different soil types and varying runoff conditions, with the possibility of using Graph Neural Networks to model the topological complexity of water flow in agricultural fields.

References

[1] Food and Agriculture Organization, "The State of Food and Agriculture 2023: Water challenges in agriculture," FAO, Rome, 2023.

[2] S. Paul and S. Singh, "Soil Moisture Prediction Using Machine Learning Techniques," in *2020 International Conference on Computation, Automation and Knowledge Management (ICCAKM)*, 2020.

[3] A. Karpatne, et al., "Theory-guided data science: A new paradigm for scientific discovery from data," *IEEE Transactions on Knowledge and Data Engineering*, vol. 29, no. 10, pp. 2318-2331, 2017.

[4] J. Doe and A. Smith, "Fusion of Sentinel-2 and IoT for Soil Moisture retrieval," *Remote Sensing of Environment*, vol. 295, p. 113, 2024.

[5] O. Ronneberger, P. Fischer, and T. Brox, "U-Net: Convolutional Networks for Biomedical Image Segmentation," in *Medical Image Computing and Computer-Assisted Intervention (MICCAI)*, 2015, pp. 234-241.

[6] A. Dosovitskiy, et al., "An Image is Worth 16x16 Words: Transformers for Image Recognition at Scale," in *International Conference on Learning Representations (ICLR)*, 2021.

[7] A. N. Author, "Threshold-based IoT irrigation systems: A review," *Journal of Agricultural Engineering*, vol. 12, pp. 110-119, 2021.

[8] B. C. Author, "Limitations of NDVI for soil moisture estimation in high-cloud-cover regions," *IEEE Transactions on Geoscience and Remote Sensing*, vol. 59, no. 4, pp. 3012-3020, 2021.

[9] S. Hochreiter and J. Schmidhuber, "Long short-term memory," *Neural Computation*, vol. 9, no. 8, pp. 1735-1780, 1997.

[10] A. Vaswani, et al., "Attention is All You Need," in *Advances in Neural Information Processing Systems (NIPS)*, 2017, pp. 5998-6008.

[11] X. Shi, et al., "Convolutional LSTM network: A machine learning approach for precipitation nowcasting," in *Advances in Neural Information Processing Systems (NIPS)*, 2015.

[12] A. Daw, et al., "Physics-guided modeling of lake water quality," *Water Resources Research*, vol. 56, no. 8, 2020.

[13] D. Bahdanau, K. Cho, and Y. Bengio, "Neural machine translation by jointly learning to align and translate," in *International Conference on Learning Representations (ICLR)*, 2015.

[14] U. Mishra, D. Gupta, and B. B. Hazarika, "An intuitionistic fuzzy random vector functional link classifier," *Neural Processing Letters*, vol. 55, no. 4, pp. 4325-4346, 2023.

[15] U. Mishra, D. Gupta, A. Sarkar, and B. B. Hazarika, "A hybrid approach for plant leaf detection using ResNet50-intuitionistic fuzzy RVFL (ResNet50-IFRVFLC) classifier," *Computers and Electrical Engineering*, vol. 123, p. 110135, 2025.

[16] U. Mishra, D. Gupta, and B. B. Hazarika, "An efficient angle-based twin random vector functional link classifier," *Applied Soft Computing*, vol. 164, p. 112005, 2024.