II B.Tech. II sem
(ECE)

ANALOG CIRCUITS LABORATORY MANNUAL

List of Experiments

Implement any eight experiments (software/ hardware) of the following:

CYCLE I:

1. Class B Complementary Symmetry Amplifier.
2. Single tuned amplifier
3. RC high pass and low Pass circuits for square input
4. Dual Diode Clipper and positive Clamper.
5. Adder, Subtractor, Comparator, Integrator and Differentiator using IC 741 OP-AMP.
6. Active first order LPF, HPF using OP-AMP
7. R-2R ladder D-A Converter
8. Monostable and Astable Multivibrator using 555 timer.
9. Voltage controlled oscillator.
10. Measurement of Capture range and lock range of 565.

CYCLE II:

2. Development of one application which shall cover maximum no. of experiments in Cycle I.

2. SINGLE TUNED AMPLIFIER

Aim: To design and plot the frequency response of a single tuned amplifier

Components:

Name	**Quantity**
Transistor BF194	1
Resistor 94K , 68K , 3.9K , 2.2K	1,1,1,1
Capacitor 10μF,100μF, 3.18 ηF	2, 1,1
Inductor 39 μH	1

Equipment:

Name	**Range**	**Quantity**
Bread Board		1
Dual DC power supply	0-30V	1
Function Generator	(0-1)MHz	1
Digital Ammeter, Voltmeter	[0-0μA/200mA], [0-20V]	1
CRO	(0-20)MHz	1
CRO probes, Connecting Wires		

Theory:-
Tuned amplifier circuit uses parallel LC resonant circuit as the load impedance, They have a very narrow bandwidth, hence they select a particular frequency and rejects other, they are used in radio receivers.
A single tuned amplifier consists of only one LC section as a load.

Design: -
Design a single tuned amplifier to provide a gain of 100 at a frequency of 455 KHZ and provide a bandwidth of 20 KHZ. Use transistor BF194 for which β = 90, gm = 40mS. The biasing conditions are as follows. VCC = 12V, VCE = 8V, IC = 1mA and S = 10.

Sol:
Use, $I_C = \beta \times I_B$, $\Rightarrow I_B = 11.11\mu A$

Apply KVL to the output loop: $-V_{CC} + V_{CE} + I_C R_E = 0 \quad \Rightarrow R_E = 4K\Omega \cong 3.9K\Omega$

Apply Thevenin"s theorem to the basecircuit, then $V_B = (V_{CC} \times R_2) / (R_1 + R_2)$

And $R_B = R_1 \times R_2 / (R_1 + R_2)$

We know that the stability factor for a self-bias circuit is given by,

$$S = \frac{1+\beta}{\quad}$$

$$1+\frac{\beta \times R_E}{R_B + R_E} \qquad \Rightarrow R_B = 39.43K\Omega$$

Apply KVL to the input loop, then $-V_B + I_B \times R_B + V_{BE} - I_E \times R_E = 0 \qquad \Rightarrow V_B = 5V$

Divide R_B with V_B:

$$\Rightarrow R_1 = \frac{V_{CC} \times R_B}{V_B} \qquad \Rightarrow R_1 = 94.63K\Omega$$

$$R_B = \frac{R_1 \times R_2}{R_1 \times R_2} \qquad \Rightarrow R_2 = 68K\Omega$$

Design of tuned circuit: -

Effective quality factor is given by $Q_e = \frac{f_0}{BW} = 22.75$

Let $C = 0.1\ \mu F$

The resonant frequency of the single tuned amplifier is given by,

$$\varpi_o = \frac{1}{\sqrt{LC}} \qquad \Rightarrow L = 1/(\omega_0^2 \times C) = 253\ mH$$

Circuit diagram: -

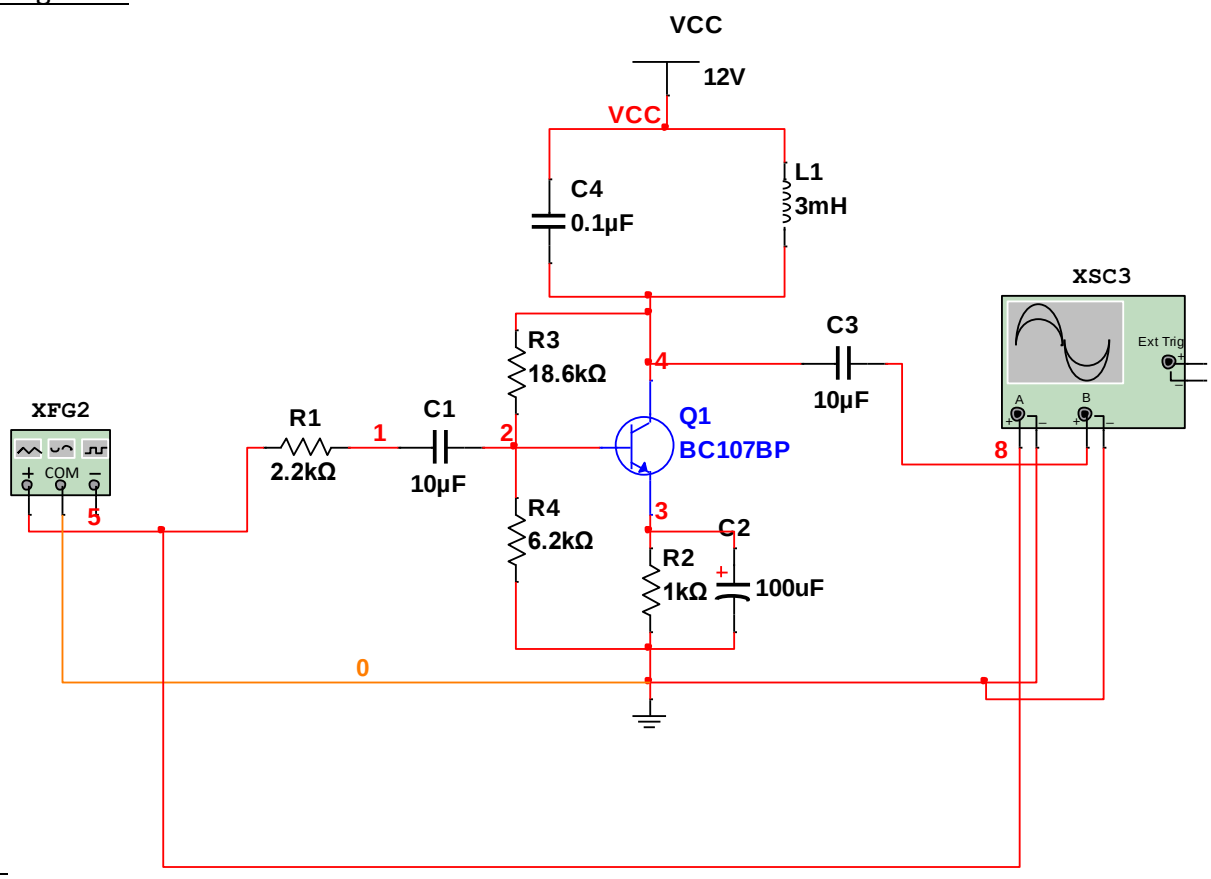

Procedure:-

1) Connect the self bias circuit and check the DC conditions.

2) Connect the other components and set the generator frequency at 455KHZ. Adjust the peak-to-peak amplitude of the input voltage to 30mV. Observe the output voltage waveform on the CRO screen and note the peak-to-peak value of the output voltage. Calculate the gain.
3) Vary the frequency from 400 to 600KHZ in appropriate steps.
4) Calculate the gain for each frequency.
5) Plot a graph between gain and frequency. Calculate bandwidth from the graph.

Observations:-

DC conditions:-

V_{BE} = ……. V_{CE} = ……

I_B = …… I_C = ……..

Frequency Response:-

Sl. No.	Frequency	V_i (mV)	V_o (V)	Gain = $\frac{Vo}{Vi}$

Expected Graph:-

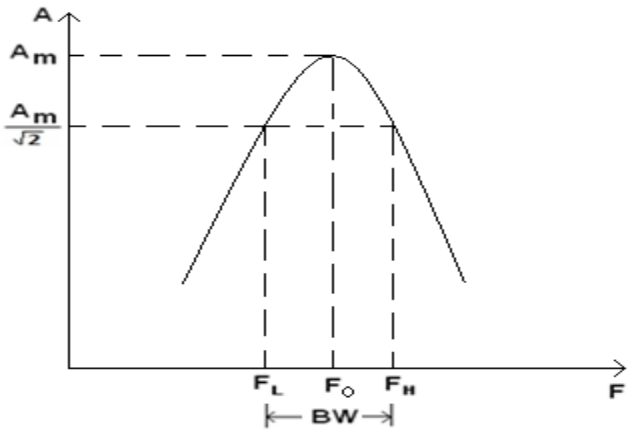

Frequency response of single tuned amplifier

Result:-

Resonant frequency = ----------

Gain at resonance = ----------

Bandwidth = ----------

3. RC HIGH PASS AND LOW PASS CIRCUITS FOR SQUARE INPUT

3.(a) HIGH PASS RC CIRCUIT

Aim: 1. Design a High pass RC circuit for a given cutoff frequency.

2. Verify the condition for which the High pass circuit acts as a differentiator.

3. Measure % of tilt for the designed 3 Time constants.

APPARATUS:

i) C.R.O ii) Function Generator iii) Resistance box

iv) Capacitance box. v) Single stand wires vi) Bread board

Design: $f_l = 1 / (2\pi RC)$, $\tau = RC$ By fixing C, Calculate R for the given cutoff frequency.

CIRCUIT DIAGRAM:

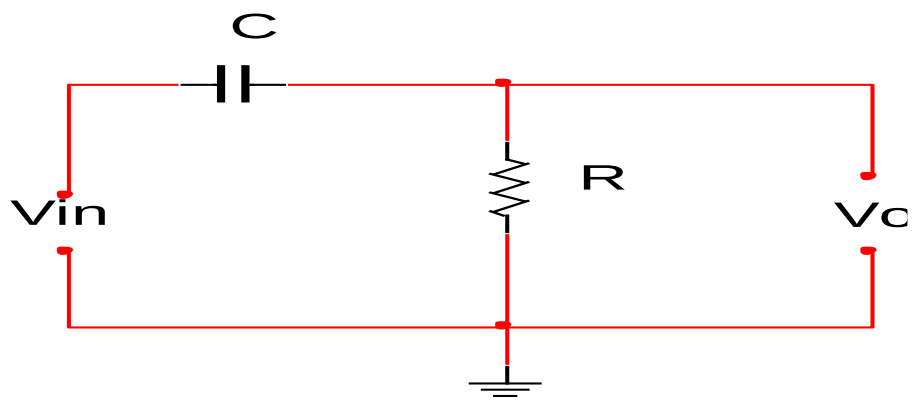

Fig: High pass RC circuit

PROCEDURE:

1. Connect the circuit as shown in Fig.
2. Apply sine wave of $5V_{p-p}$ and take the frequency response from 100 Hz up to 100 KHz.
3. Draw the graph - Gain (dB) vs Frequency (Hz).
4. Find f_1 - lower 3 dB frequency from the graph and compare with theoretical cutoff frequency.

OBSERVATIONS:

FREQUENCY RESPONSE:

V_i =

S.No.	FREQUENCY(Hz)	V_o(V)	Av = V_o/V_i	α=20 log(V_o / V_i) dB
1.	100			
2.	300			
3.	600			
4.	1000			
5.	3K			
6.	.5K			
.	.			
	100KHz			

GRAPH:

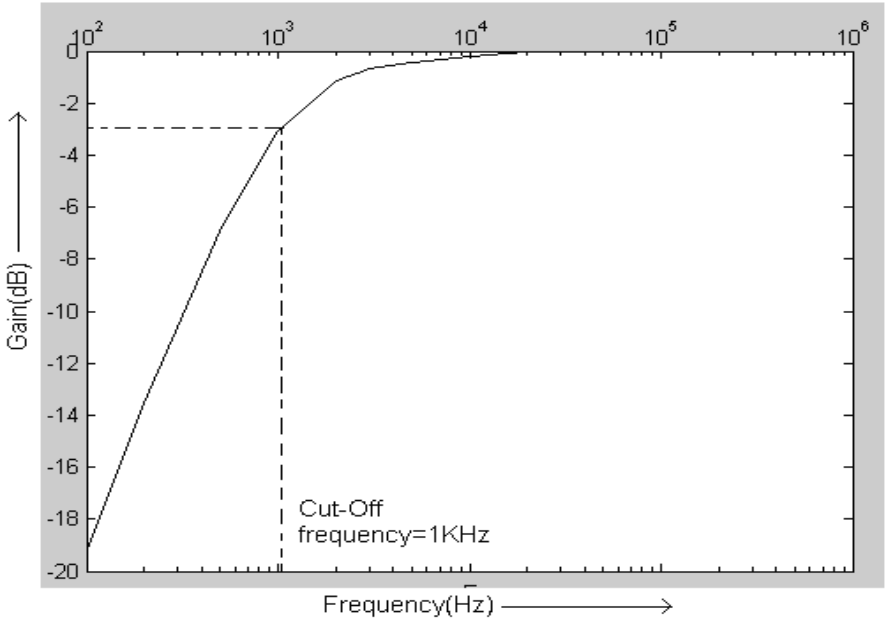

Design:(For Square Wave Input)

1. Choose T = 1msec .i.e., (f=1KHz)
2. Select C = 0.1 μF.
3. For RC = T; calculate R.
4. For RC >> T; calculate R.
5. For RC << T; calculate R.

OBSERVATIONS:

Response for Square Wave Input:

V_i =

S.No.	Time Constant	Voltage Levels (V)				% Tilt	
		V_1	V_1^1	V_2	V_2^1	Theoretical	Practical
1.	RC=T						
2.	RC>>T						
3.	RC<<T						

PROCEDURE:

1. Connect the circuit as shown in Fig.
2. Using a signal generator apply square wave of 5v p-p &1 KHz.

3. Note the output wave form for the different time constants: $\tau = T, \tau >> T$ and $\tau << T$.

4. Calculate the % tilt of the output waveforms and verify with the theoretical values.

5. % tilt = $(1-e^{-T/2RC})/(1+e^{-T/2RC}) \times 200$ (theoretical)

6. % tilt = $[\ (V_1 - V_1')/(V/2)\ ] \times 100$ (practical)

Output waveforms:

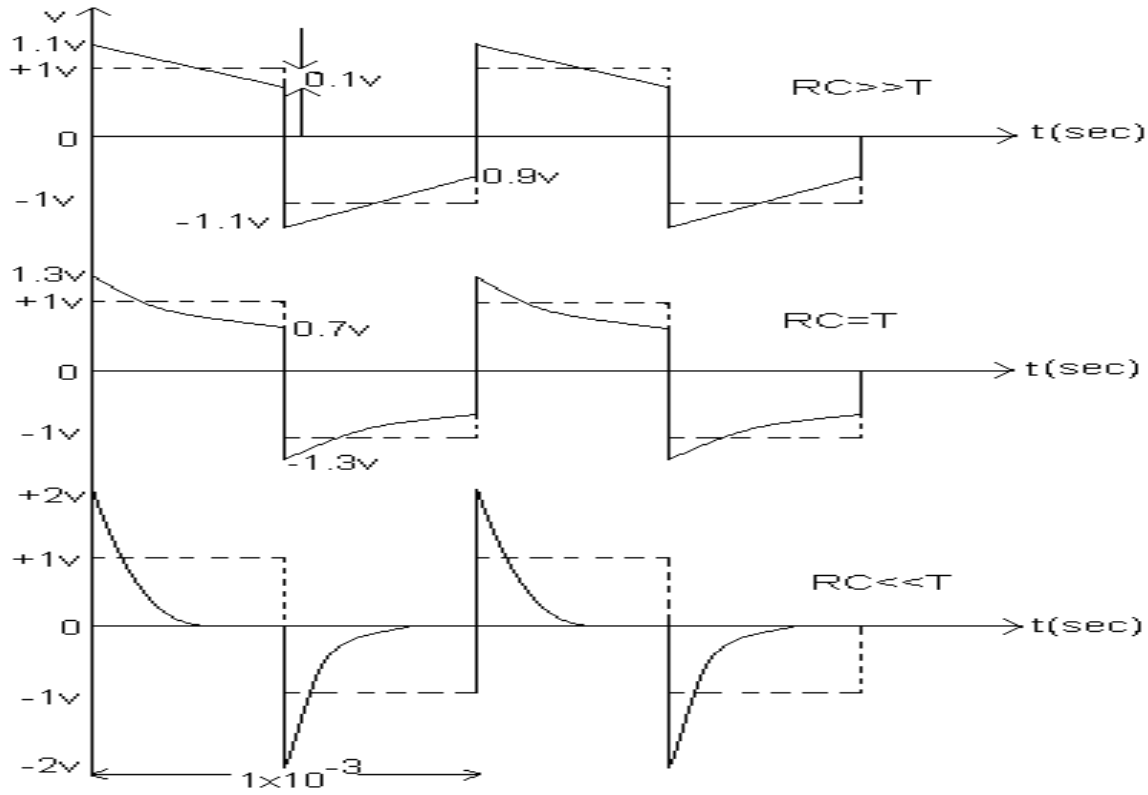

RESULT:

Theoretical and experimental values are verified from the response of the HPRC Circuit.

EXERCISES:

1. Design a differentiator circuit to differentiate 5 KHz square wave signal.
2. Design a HPRC circuit for a tilt of 5%.
3. What is the condition for the high pass circuit to act as a differentiator?

3(b) LOW PASS RC CIRCUIT

AIM: 1. Design a Low pass RC circuit for a given cutoff frequency.
2. Verify the condition for which the lowpass circuit acts as an integrator.
3. Measure rise time of the designed circuit for the long time constant.

APPARATUS: i) C.R.O ii) Function Generator
iii) Resistance box iv) Capacitance box.

Design: $f_2 = 1 / (2\pi RC)$, Time constant (τ) = RC
By fixing C value , Calculate R for the given cutoff frequency.

CIRCUIT DIAGRAM:

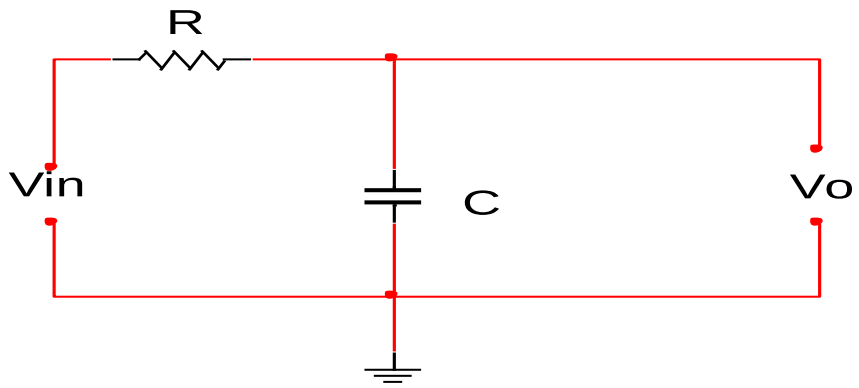

Fig: Low pass RC circuit

PROCEDURE:
1. Connect the circuit as shown in Fig.
2. Apply sine wave of 5v p-p and take the frequency response from 100 Hz up to 100 kHz.
3. Draw the graph - Gain (dB) Vs Frequency (Hz).
4. Find the f_h - upper 3 dB frequency from the graph and compare with theoretical cutoff frequency.

OBSERVATIONS:
FREQUENCY RESPONSE: V_i =

S.No.	FREQUENCY(Hz)	V_o(V)	Av = V_O / V_i	α= 20 log(V_O / V_i) dB
1.	100			
2.	300			
3.	600			
4.	1000			
5.	2K			
6.	3K			
.	.			
	.			
.	100KHz			

Graph:

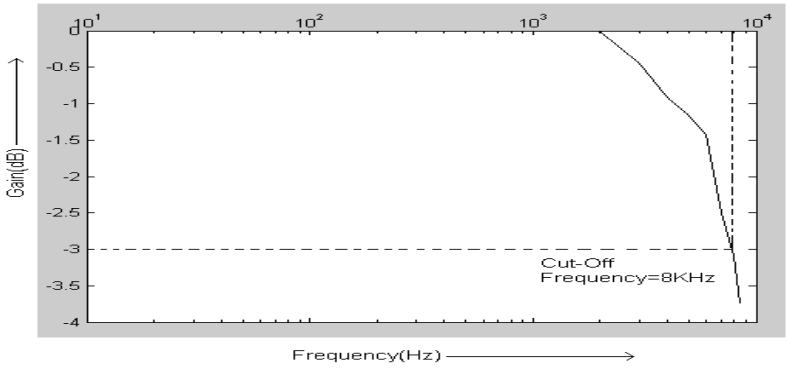

Design: (For Square Wave Input)

1. Choose T = 1msec.i.e., (f=1KHz)
2. Select C = 0.1 μF.
3. For RC = T; calculate R.
4. For RC >> T; calculate R.
5. For RC << T; calculate R.

OBSERVATIONS:

RESPONSE FOR SQUARE WAVE INPUT:

V_i =

S.No.	Time Constant	Voltage Levels (V)		Time Period(ms)
		V_1	V_2	
1.	RC=T			
2.	RC>>T			
3.	RC<<T			

PROCEDURE:

1. Connect the circuit as shown in Fig.
2. Using a signal generator apply square wave of 5v p-p & 1 KHz frequency.
3. Note the output waveforms for the different time constants: $\tau = T, \tau >> T$ and $\tau << T$.
4. Calculate the rise time for $\tau << T$ and verify with the theoretical value.
5. $(t_r) = 2.2$ RC (theoretical). $t_r = t_2 - t_1$ (practical) where t_2, t_1 are the time taken by the output voltage to reach 90% and 10% of its final value respectively.
6. What is the condition for the low pass circuit to act as an integrator?

OUTPUT WAVEFORMS:

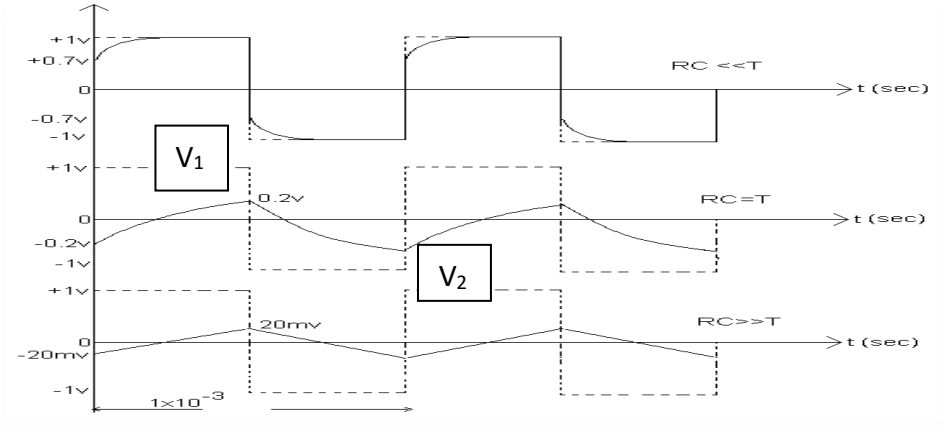

RESULT: Theoretical and Experimental values are verified from the output waveforms.

4. DUAL DIODE CLIPPER AND POSITIVE CLAMPER

4.a: Dual Diode Clipper:
AIM: To study Dual Diode Clipper and positive Clamper and their characteristics

APPARATUS: i) C.R.O ii) Function Generator
iii) Resistance box iv) Capacitance box

CIRCUIT DIAGRAM:

Dual Diode Clipper Circuit:

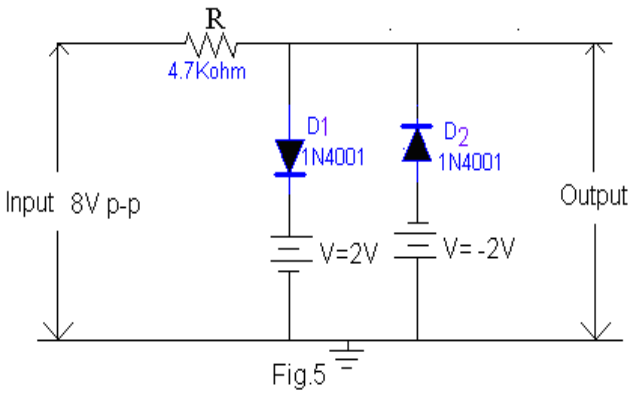

Fig.5

When the diode D1 is forward biased and D2 is reverse biased Vo= V+ Vγ =2.6v
When the diode D2 is forward biased and D2 is reverse biased Vo=-(V+ Vγ) = -(2+0.6)v = -2.6v
When the diodes D1 &D2 are reverse biased Vo=Vi .

PROCEDURE:
1. Connect input signal in one channel and output signal to other channel of CRO. Adjust both the channel of CRO to ground position. Put them to DC position.
2. Give a sine wave input (Vi) of amplitude 8Vp-p at a frequency of 1KHz.
3. $R = [R_f R_r]^{1/2}$ R_f = 100 ohms ; R_r = 50K ohms. R must be chosen a value of 1k ohm Observe output waveforms.
4. Press XY mode (i.e. Disconnecting the Time base from X–plates) & Observe transfer Characteristics of Dual Diode Clipper Circuit:

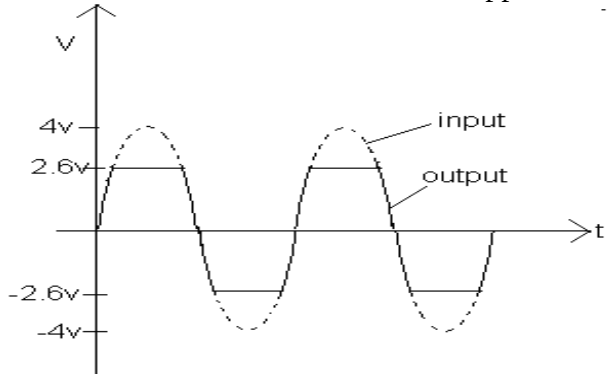

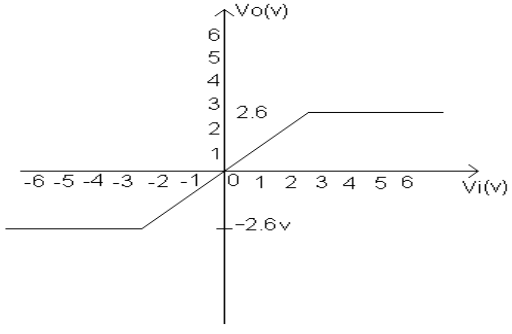

RESULT: Thus the Dual diode clipper circuit is studied and its transfer characteristic observed.

4.b: positive Clamper:

AIM: To Study Positive Clamper Circuits.

APPARATUS: i) C.R.O ii) Function Generator
iii) Resistance box iv) Capacitance box

CIRCUITDIAGRAM:

Positive clamping to Vr=0V

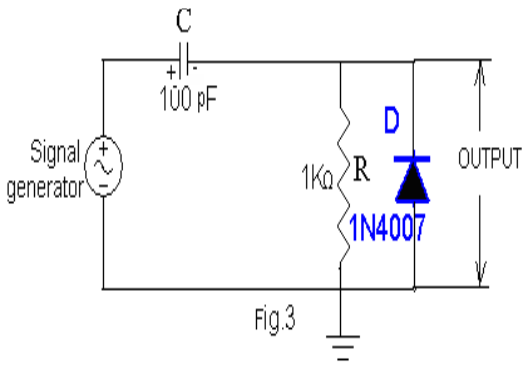

Fig.3

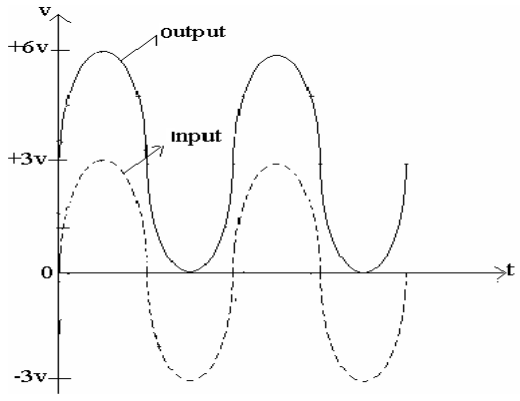

Positive clamping to V= -2v

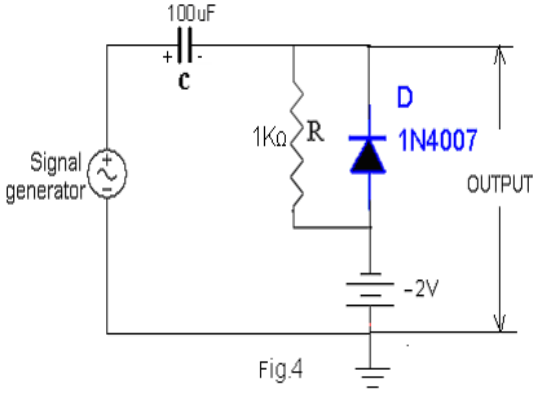

Fig.4

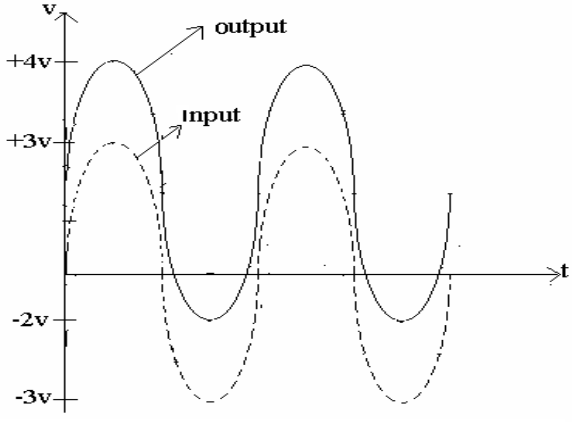

PROCEDURE:

1. Connect input signal to channel 1 and output signal to other channel of CRO.
2. Adjust both the channel of CRO to ground position. Put them to DC position.
3. Give a sine/square wave input of amplitude 6Vp-p at a frequency of 1 KHz.
4. Observe the clamped output waveforms and draw the graphs.

RESULT: DC level is restored in each case.

5.ADDER, SUBTRACTOR, COMPARATOR, INTEGRATOR AND DIFFERENTIATOR USING IC 741 OP-AMP

AIM: To verify the operation of an op-amp as an Adder, Subtractor, Comparator circuits.

APPARATUS:

i) IC 741 ii) Resistors- 1K Ω - 4, 100 Ω - 2, 10KΩ - 1.
iii) Diodes 1N4007 – 2 iv) CRO, DC power supply, Function generator.
v) capacitors 0.1uF, 1uF vi) IC trainer kit, Patch chords and connecting wires.

SUMMING AMPLIFIER (ADDER):

Circuit Diagram (A)

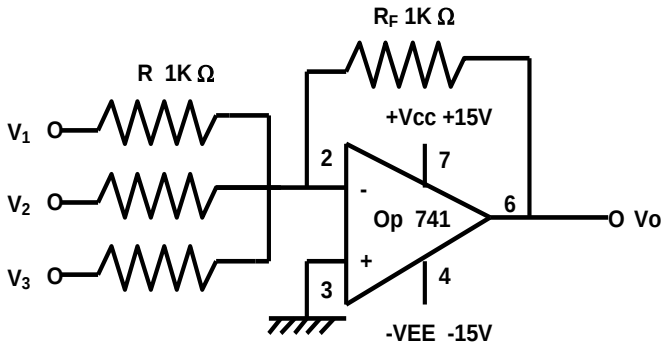

Table

V_1	V_2	V_3	V_O Theo	V_O Pract
1	1	2		
2	1	2		
3	1	1		
4	2	1		

$$Vo = - R_F [V1+V_2+V_3] /R$$

PROCEDURE: 1) Connect the circuit as shown in the fig.
2) Apply the voltages V_1, V_2 and V_3 (d .c voltages)
3) Observe the output and note down in the table.

DIFFERENCE AMPLIFIER (SUBTRACTOR):

Circuit Diagram (B)

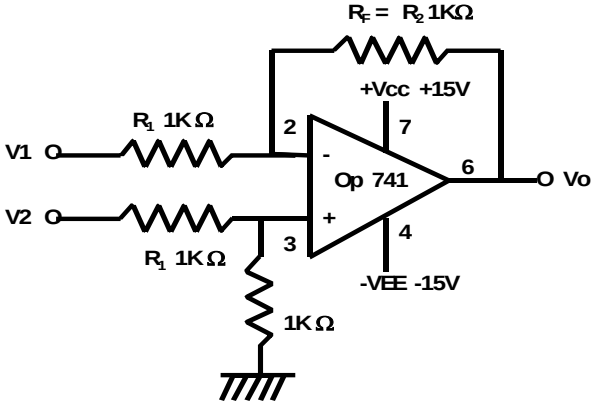

Table

V_1	V_2	Theo V_O	Vo Prac
3	1		
4	1		
5	1		
3	2		
1	3		

$$V_o = R_2 (V_2 – V_1) / R_1$$

PROCEDURE:

1) Connect the circuit as shown in the fig .
2) Apply the voltage V_1 and V_2 (dc voltages).

3) Observe the output and note down in the table.

C. COMPARATOR: (Non – Inverting comparator)

Circuit Diagram

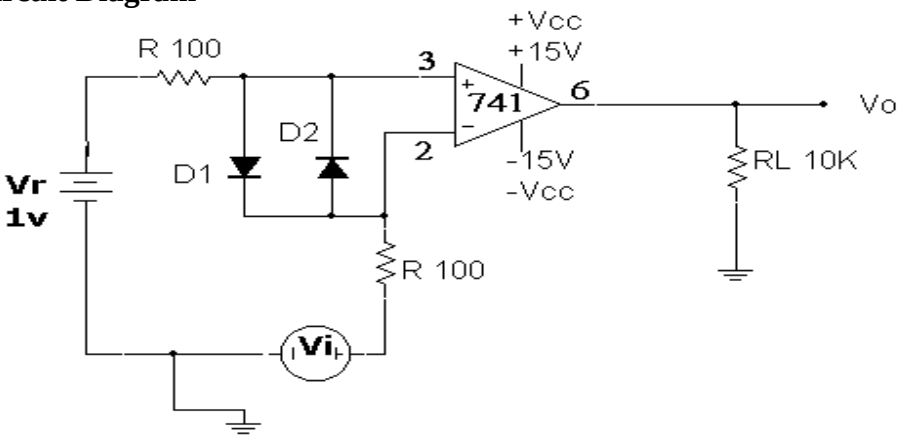

Note: For inverting comparator reverse V_i and V_{ref} at input terminals.

Procedure:

1) Connect the circuit as shown in the figure
2) Connect 1Kz function generator to the non-inverting input terminal and keep Input voltage equal to 4 V_{p-p}
3) Apply V_{ref} of 1V to the Inverting input terminal
4) Connect CRO at the output terminal
5) Apply V_{ref} at different levels (above and below zero axis), observe and record Output waveforms.

EXPECTED GRAPH:

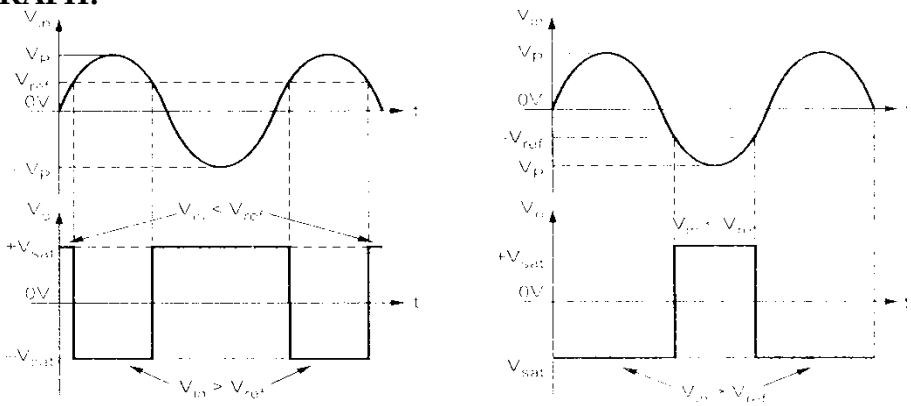

RESULT: Op-Amp as adder, subractor, comparator is verified.

Discussion Questions:

1. What are the various DC & AC specifications?
2. Give equivalent circuit of OP-AMP?
3. List out linear and non linear applications of OP-AMP?
4. Design An adder circuit using an Op-Amp to set $V_0 = -(0.1V_1 + V_2 + 10V_3)$

PIN DIAGRAM:

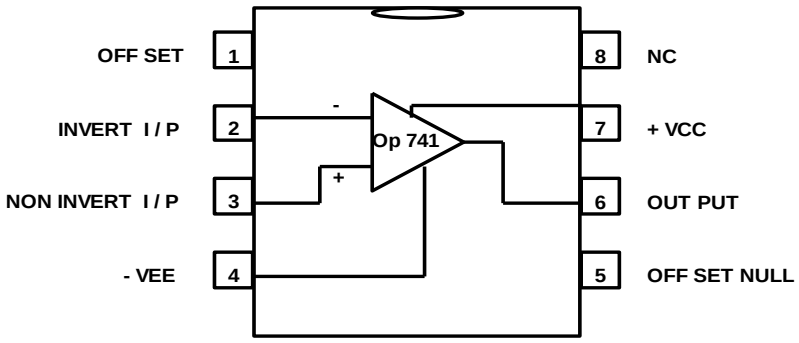

INTEGRATOR:

CIRCUIT DIAGRAM (d):

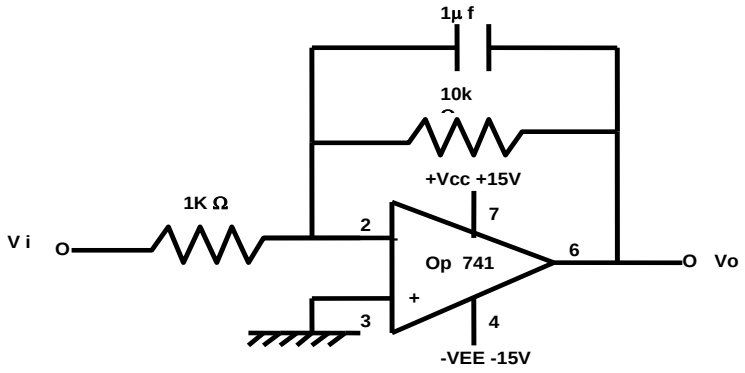

OBSERVATION TABLE

S.No	F (Hz)	O/P wave form
1	100	
2	500	
3	1000	

$$V_o = -1/RC \int V_i \, dt$$

DESIGN:

Design a practical integrator, which has peak sain of 20db & the gain is 3db down from its peak when ω = 10,000 rad / sec use a capacitance of 0.01µF.

Sol: Gain will be peak when $\omega = 0$

$\therefore$ Peak value of gain in db = A (db) = $20 \log_{10} (R_f / R_1) / \sqrt{1+0} = 20 \log_{10} R_f / R_1 = 1$

$R_f / R_1 = 10 \Rightarrow R_1 = R_f / 10$; At $\omega = 10^4$ rad / sec , gain is 3db gain

i.e. At 3db gain = 20db –3db = 17db We known that $|A| = (R_f / R_1) / (\sqrt{1+ (w R_f C_f)^2})$

$(20 \log 10) / (\sqrt{1+ ((10^4 \, 10^{-8} R_f)^2)} = 17db$; from this $R_f = 10^4 = 10k\Omega$; $R_1 = 1k\,\Omega$

PROCEDURE:

1) Connect the circuit as shown in fig.
2) Apply a square wave of 1 V p-p at input and check whether o/p is triangular wave or not.
3) Observe output using CRO for 3 frequencies as given in the table.

EXPECTED GRAPH:

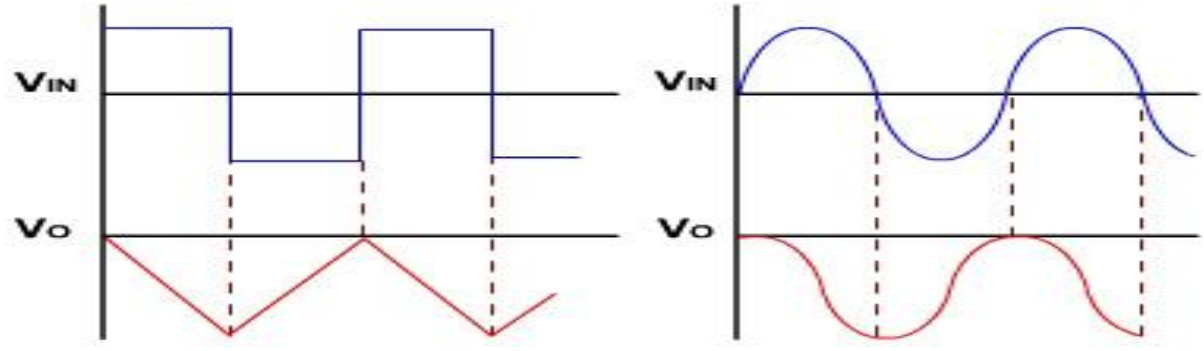

e. DIFFRENTIATOR
CIRCUIT DIAGRAM :

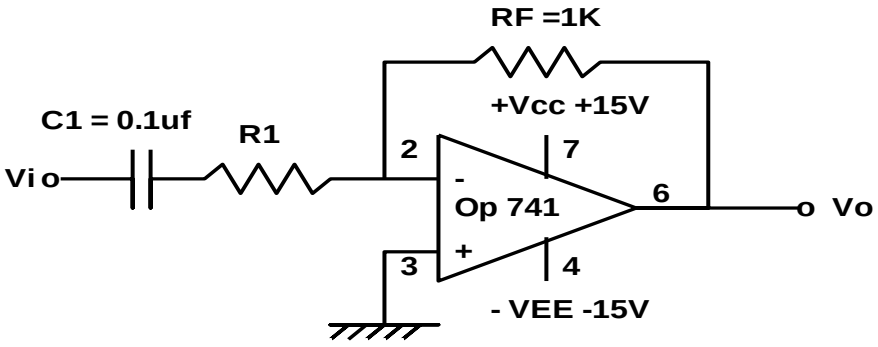

$$Vo = - RC\, dv_i / dt$$

DESIGN:
Design a differentiator to differentiate an input signal that varies in frequency from 10Hz to about 1kHz .
Solution:

1. Choose 0 dB frequency fo equal to highest frequency of input signal assume value of C_1 & then calculate R_F $f_a = 1 / 2\pi R_F C$
2. Choose limiting frequency $f_b = 10 f_a$ (say) $f_b = 1 / 2 \pi R_1 C_1$
3. Now calculate the value of R_1 & C_F so that $R_1C_1 = R_F C_F$
   $R_f = 1.59\ k\Omega$, if $C_1 = 0.1\mu f$ $R_1 = 82\ \Omega$; $C_f = 0.0055\mu f$

PROCEDURE:

1) Connect the circuit as shown in fig .
2) Apply a square wave of 1 Vp-p at input.
3) Observe output using CRO for 3 frequencies as given in the table.

PIN DIAGRAM:

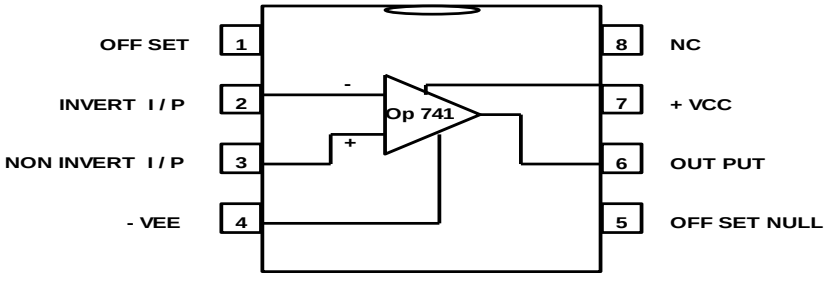

EXPECTED GRAPH:

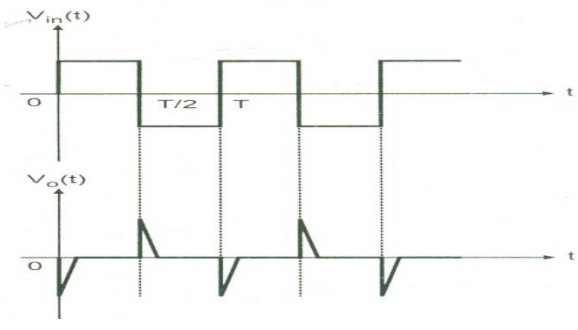

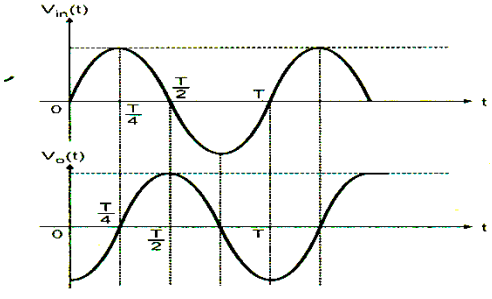

RESULT: The operation of an OP-AMP as an integrator and differentiator are studied.

6. ACTIVE FIRST ORDER LPF, HPF USING OP-AMP

6 (a).
Aim: To study and design first-order LPF using an op-amp IC 741 and to obtain frequency response.

Equipments and components: Opamp(IC 741), Resistors(15k, 10k), Capacitor(0.01μF), Semiconductor trainer kit, Function generator, Cathode ray oscilloscope.

Theory: A frequency selective electric circuit that passes electric signals of a specified band of frequencies and attenuates the signals of frequencies outside the band is called an electric filter. The first-order lowpass filter consists of a single RC network connected to the non-inverting input terminal of the operational amplifier. Resisters R1 and RF determine the gain of the filter in the passband. The lowpass filter has maximum gain at f = 0 Hz. The frequency range from 0 to fh is called the passband and the frequency range f > fh is called the stopband.

The first order low pass butter worth filter uses an RC network for filtering. The op-amp is used in the noninverting configuration, hence it does not load down the RC network. Resistors R1 and R2 determine the gain of the filter.

V0/Vin = Af /(√1 +(f/fh)2

Where, Af = 1+ Rf /R1= passband gain of filter, f = frequency of the input signal, fh=1/2ΠRC = high cut-off frequency of the filter, and V0/Vin = gain of the filter as a function of frequency. The gain magnitude and phase angle equations of the LPF can be obtained by converting V0/Vin into its equivalent polar form as follows |V0/Vin| = Af /(√1 +(f/fh)2, Φ = - tan-1 (f/fh). Where Φ is the phase angle in degrees. The operation of the LPF can be verified from the gain magnitude equation.

Circuit Diagram:

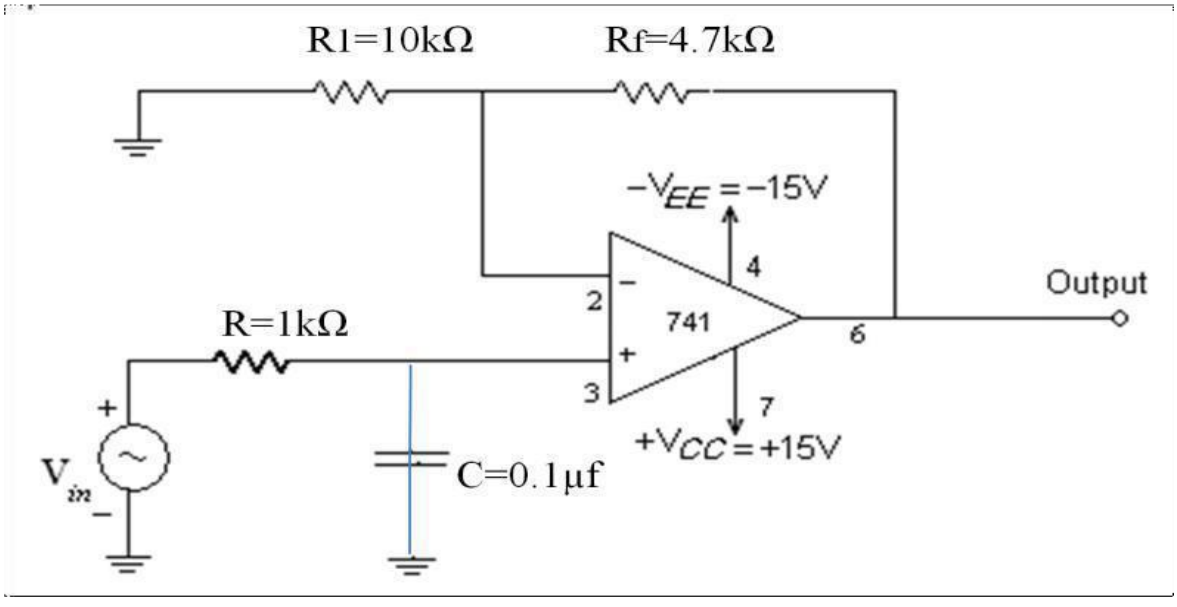

Observations:

S.NO	Input frequency	Output Voltage	Gain in dB 20 log(Vo/Vi)
1. 2 3 4. 5. 6. 7.			

Calculations:

Choose a standard value of Capacitor C say 0.01 μF

$F_h=1/2\pi RC$

$F_h=1/2\pi*15k*0.01\mu f = 1k$

$A_v=1+R_f/R_1$ & With this $R_1=10k$, $R_f=10k$

Model Graph:

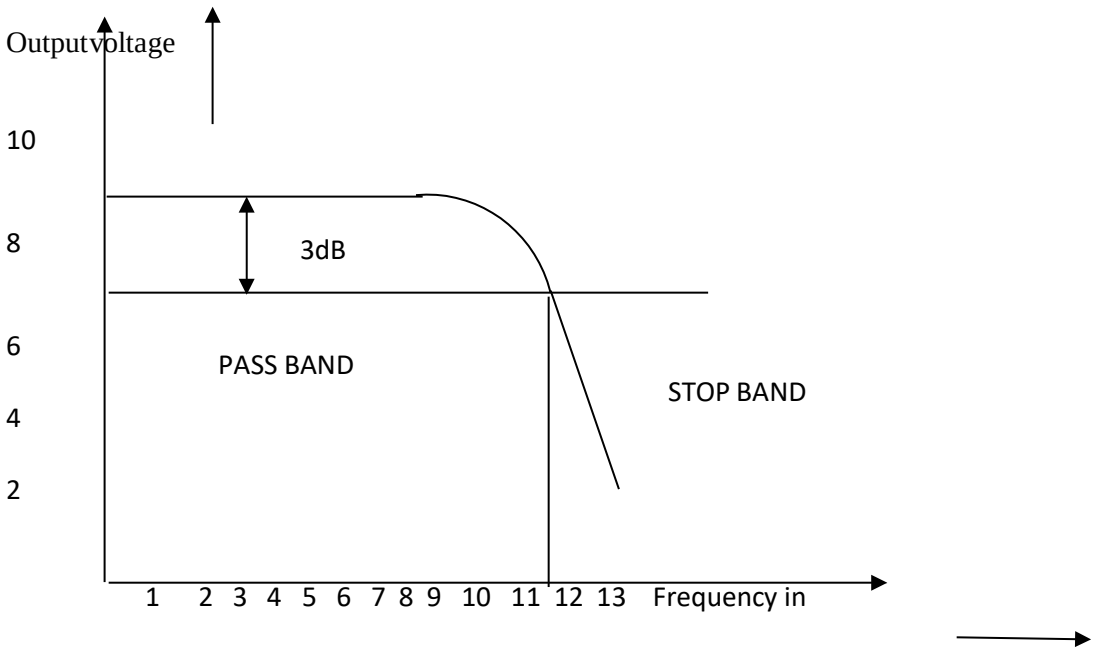

6 (b) Aim: To study and design first-order HPF using an op-amp IC 741 and to obtain frequency response.

Equipment and components: Op-Amp(IC 741), Resistors(15k, 10k), Capacitor(0.01μF), Semiconductor trainer kit, Function generator, Cathode ray oscilloscope.

Theory: High pass filters are often formed simply by interchanging frequency. Determining resistors and capacitors in LPFs that is, a first-order HPF is formed from a first-order LPF by interchanging components 'R' and 'C'. The figure show first-ordered butter worth HPF with a lower cut-off frequency of ' F_l'. This is the frequency at which the magnitude of the gain is 0.707 times pass band and value. All frequencies, with the highest frequency determined by the closed-loop band width of the op-amp. For the first order, HPF the gain is

$V_0/V_{in} = A_f [(f/f_c)/\sqrt{(1+(f/f_c)^2}]$

Where, $A_f = 1 + R_f/R_1$ = Passband gain of the filter, f = frequency of input signal, $f_c = 1/2\Pi RC$ = lower cut off frequency. Since HPFs are formed from LPFs simply by interchanging Rs and Cs. The design and frequency scaling procedures of the LPFs are also applicable to HPFs.

Circuit Diagram:

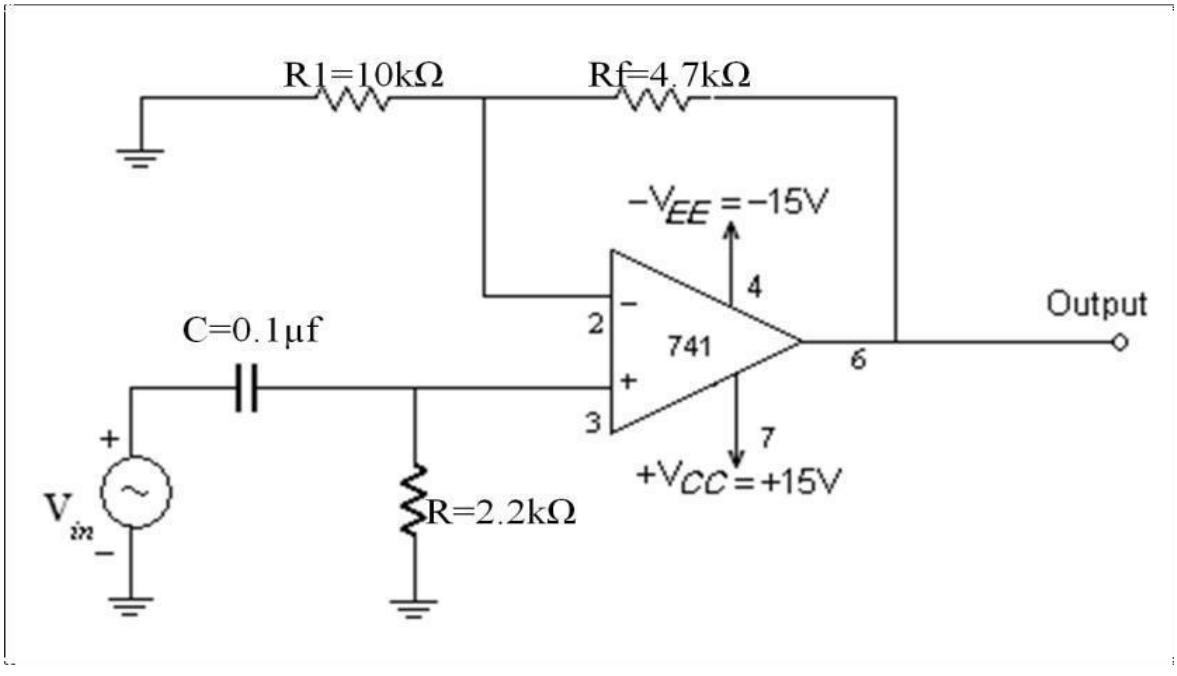

Observation:

S.NO	Input frequency	Output Voltage	Gain in dB 20 log(Vo/Vi)
1. 2 3 4. 5. 6. 7.			

<u>Calculations-</u>

Choose a standard value of Capacitor C say 0.01 μF; Then $f_L = 1/2\pi R = 1/2\pi*15k*0.01\mu = 1k$

f_L=1k

Av=1+R_f/R_1 & With this R_1=10k, R_f=10k

<u>Model Graph:</u>

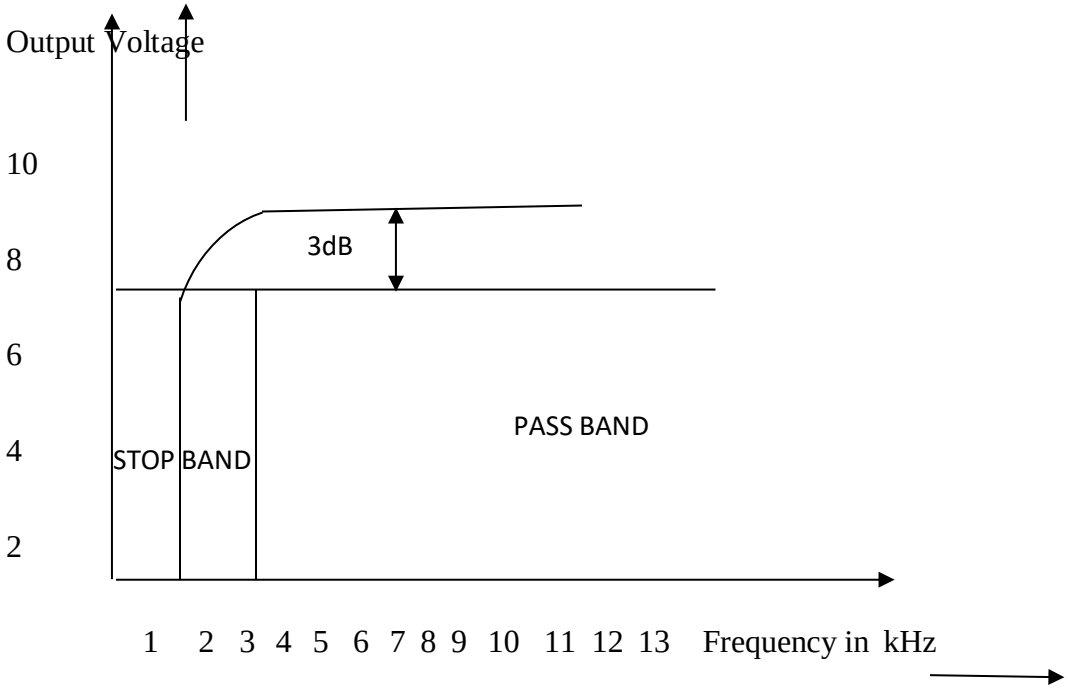

7. R-2R LADDER D-A CONVERTER

AIM: To study the performance of R-2R LADDER (4 bit) D/A converter.

APPARATUS:

i) IC 741 ii) Resistors : R= 1 KΩ , 2R= 2KΩ .
iii) IC trainer kit, DC power supply, Multimeter. iv) Patch chords and connecting wires .

CIRCUIT DIAGRAM:

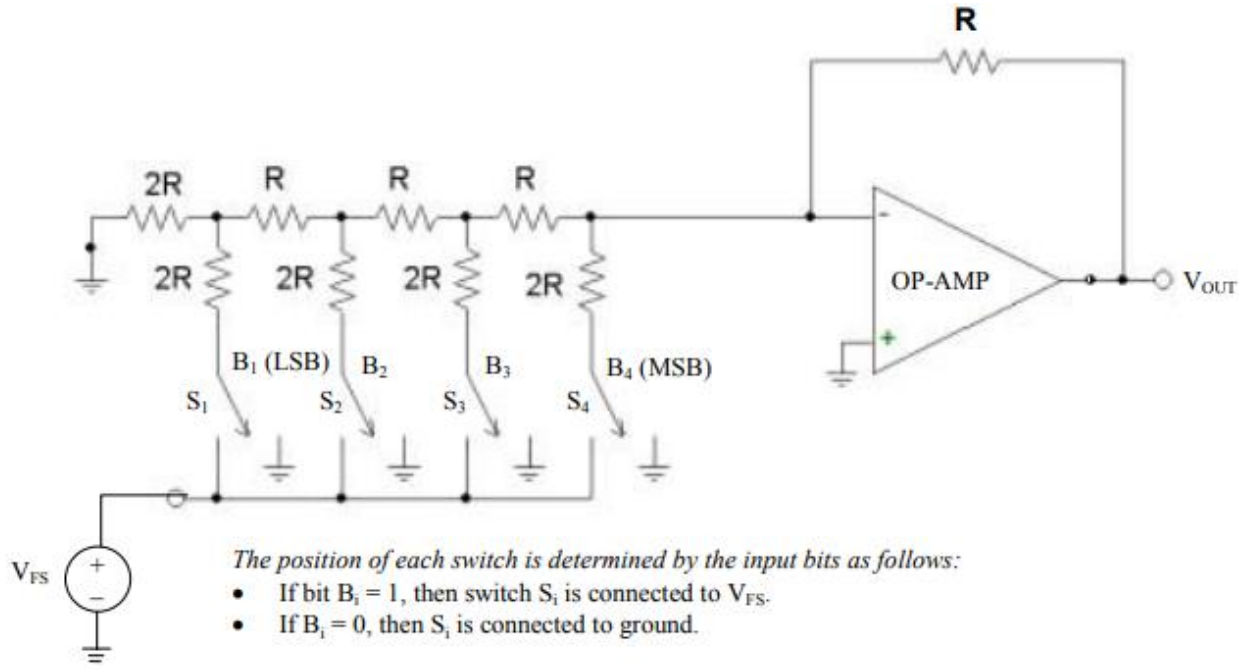

THEORY:
In weighted resistor type DAC, op-amp is used to produce a weighted sum of digital inputs where weights are produced to weights of bit positions of inputs. Each input is amplified by a factor equal to ratio of feedback resistance to input resistance to which it is connected.

$$Vout = V_{FS} \ * (B_4 \frac{1}{2} + B_3 \frac{1}{4} + B_2 \frac{1}{8} + B_1 \frac{1}{16}) \quad \text{--- (1)}$$

The R-2R ladder type DAC uses resistor of only two values R and2R.The inputs to resistor network may be applied through digitally connected switches or from output pins of a counter. The analogue output will be maximum, when all inputs are of logic high.

DESIGN: Design a 4 bit DAC using Op-Amp?$Vout = V_{FS} \ * (B_4 \frac{1}{2} + B_3 \frac{1}{4} + B_2 \frac{1}{8} + B_1 \frac{1}{16})$
Step size = Full scale voltage / (2^N- 1) = 0.8V

If V_0 = 12V, V_{FC} = 5V, Then R = _____

PROCEDURE:

1) Connect circuit as shown in figure.
2) If bit is `1` connect that particular bit resistor to V_{FC} (reference voltage).
3) If bit is `0` connect that particular bit resistor to ground.
4) By applying different combination, verify the table.

TRUTH TABLE :

B3	B2	B1	B0	Theoretical OUTPUT Voltage (V)	Practical OUTPUT Voltage (V)
0	0	0	0		
0	0	0	1		
0	0	1	0		
0	0	1	1		
0	1	0	0		
0	1	0	1		
0	1	1	0		
0	1	1	1		
1	0	0	0		
1	0	0	1		
1	0	1	0		
1	0	1	1		
1	1	0	0		
1	1	0	1		
1	1	1	0		
1	1	1	1		

PIN DIAGRAM:

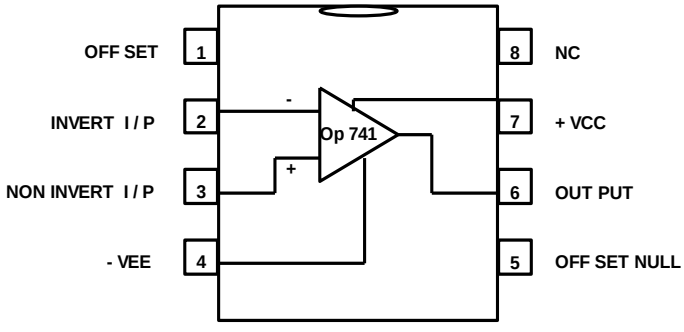

RESULT:

The performance of D/A convertor is studied .

DISCUSSION QUESTIONS:

1. What are the disadvantages of weighted binary DAC.
2. What are the advantages of R-2R DAC.

8. MONOSTABLE and ASTABLE MULTIVIBRATOR USING 555 TIMER

8.a MONOSTABLE MULTIVIBRATOR

AIM: To Design a Monostable multivibrator with pulse width 2.2msec using IC 555 Timer.

APPARATUS:

i) IC 555 ii) Resistors – 20k Ω
iii) Capacitors – 0.1μF -2 iv) Function generator, CRO,
v) IC trainer kit, Patch cards, connecting wires.

CIRCUIT DIAGRAM:

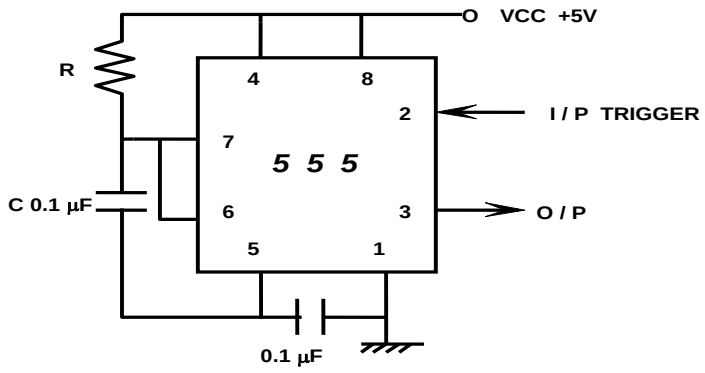

DESIGN: T_p = 1.1 RC , given T_p = 2.2msec , C = 0.1μF
2.2msec = 1.1 x R x 0.1μF, then R =20KΩ

PROCEDURE:

1) Connect the circuit as shown in the figure.
2) Apply a negative trigger pulse.
3) Note the output waveform at pin3.
4) Note the waveform of voltage across capacitor.

EXPECTED GRAPH:

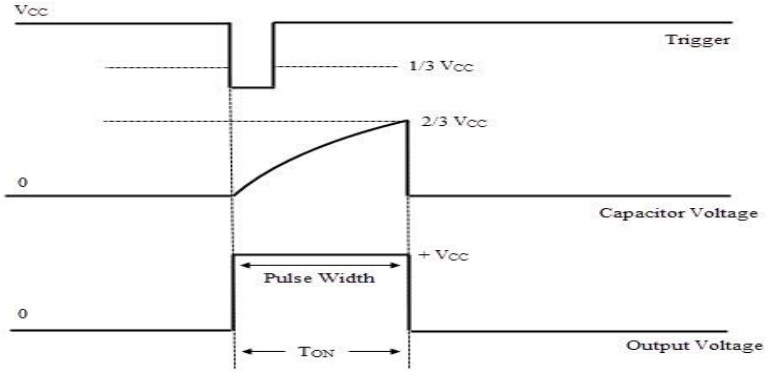

RESULT: The working of IC 555 as a monostable multivibrator is studied.

DISCUSSION QUESTIONS:

1. Discuss application of 555 timer as monostable multivibrator with circuit diagrams?
2. Explain operation of 555 timer as Monostable multivibrator?

PIN CONFIGURATION:

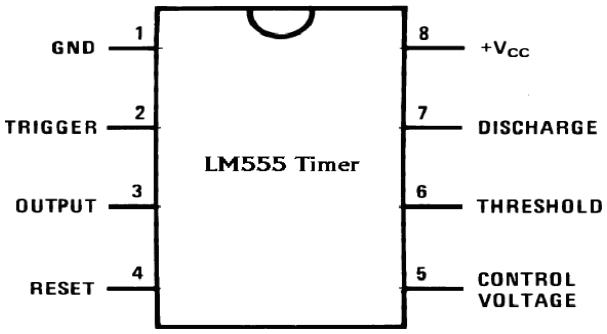

8.b ASTABLE MULTIVIBRATOR using 555 TIMER

AIM: To design and study the Operation of IC 555 timer as an astable Multivibrator.

APPARATUS:

i) IC 555
ii) Resistors
iii) Capacitors – 0.01μF, 0.1 μF
iv) CRO, D.C power supply, Patch chords, connecting wires.

CIRCUIT DIAGRAM:

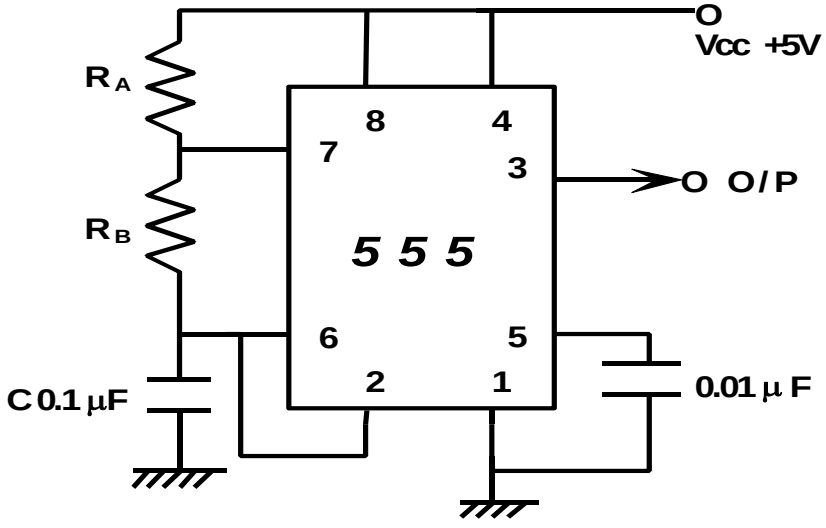

DESIGN: 60 % Duty cycle (Asymmetric square wave)

Given f =1KHz, Assume C = 0.1μF

Duty cycle = $T_{ON} / (T_{ON} + T_{OFF})$

$T_{ON} = 0.69 (R_A + R_B)C$; $T_{OFF} = 0.69 R_BC$

$f = 1 / T = 1.45 /(R_A+2R_B) C \Rightarrow T = 1ms$

$T_{ON} / T_{ON} + T_{OFF} = 0.6 \Rightarrow 0.69 (R_A+R_B)C / 0.69(R_A+2R_B)C = 0.6$

Then $2R_A = R_B$

$1KHz = 1.45 /(R_A+2R_B)C$

$R_A = 2.9 k\Omega \approx 3 k\Omega$

$R_B = 2R_A k\Omega \approx 6 k\Omega$

PROCEDURE:

1) Calculate the valves of R_A and R_B for given T_{on} and T_{off} .
2) Connect the circuit as shown in figure .
3) Observe waveforms at output along with waveform across C.
4) Draw the graph of output waveform and waveform across C.

EXPECTED GRAPH:

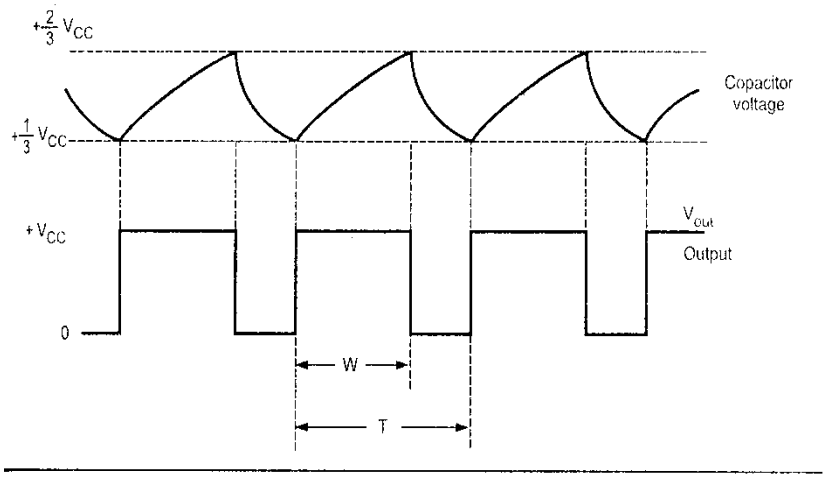

RESULT:

The astable multivibrator is designed using IC 555 and its operation is studied.

DISCUSSION QUESTION:

1) What are applications of astable multivibrator?
2) Give circuit for generator to get 50% duty cycle pulses.

9. VOLTAGE CONTROLLED OSCILLATOR.

AIM: To construct and study the voltage-controlled oscillator-using IC 566.

APPARATUS REQUIRED:

1. Function Generator.
2. C.R.O.
3. CDS Board/ Bread Board
4. Connecting Patch chords.

COMPONENTS REQUIRED:		
IC 566		1No
Resistor	10kΩ	1No
	1.5kΩ	1No
	20kΩ	1No
Capacitor	1µf	1No
	0.1µf	1No
	0.01µf	1No

CIRCUIT DIAGRAM:

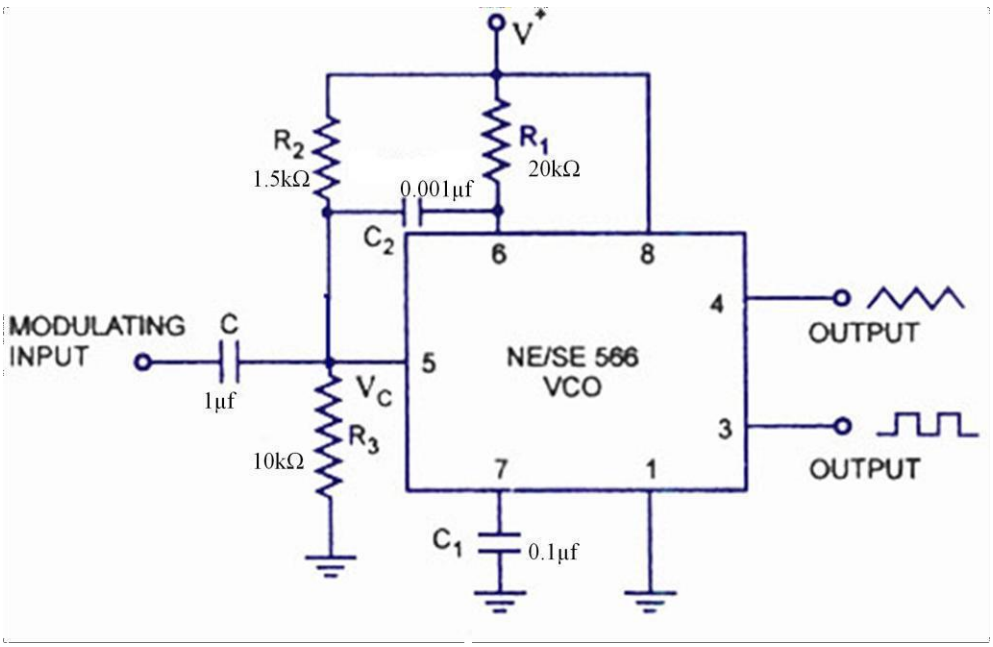

Fig 9.1: circuit diagram of VCO using IC 566

THOERY:

Fig.9.1 shows the circuit diagram of VCO. This arrangement R1C1 combination determines the free running frequency and the control voltage Vc at terminal 5 is sent by the voltage divider formed with R2 and R3. The initial voltage Vc at terminal is $\frac{3}{} V_{cc} \leq V_c \leq V_{cc}$ Where +V is the total supply voltage.

PROCEDURE:

1. Connect the circuit as shown in fig.
2. Switch on the power supply of 12V DC & observe square wave output at pin no.3 & triangular wave output at pin no.4.
3. Keep the product of R1 C1 as constant.
4. By varying the control voltage Vc, between ¾(Vcc) and Vcc observe the output frequency.

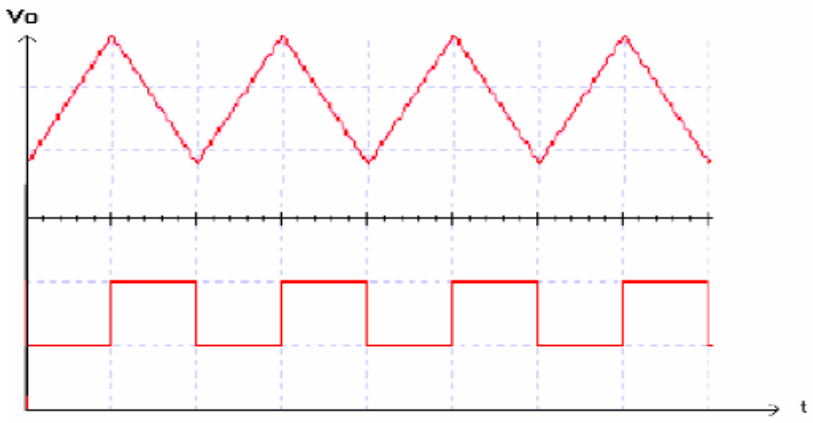

WAVEFORMS: Fig 9.2: expected output waveforms of VCO

Observations:

Square wave Output signal Amplitude = Time period =

Triangle wave Output signal Amplitude = Time period =

Applications:

1. Function generators,
2. The production of electronic music, to generate variable tones,
3. Phase-locked loops,
4. Frequency synthesizers used in communication equipment.

RESULT: Voltage controlled oscillator-using IC 566 is constructed and the frequency of oscillations is estimated. Also observed the variations in the output signal frequency in accordance with the modulating or control voltage, Vc

10.MEASUREMENT OF CAPTURE RANGE AND LOCK RANGE OF 565

AIM: To calculate free running frequency, capture range and lock range of PLL System.

APPARATUS REQUIRED:

1. C.R.O
2. Function Generator
3. DC power supply
4. CDS board / Bread Board
5. Connecting wires

COMPONENTS REQUIRED:

1.	LM 565 IC		: 1No
2.	Resistors	10K 680Ω	: 1No : 2No
3.	Capacitors	0.1µ F	: 1No
		1µ F	: 1No
		0.01µ F	: 1No

CIRCUIT DIAGRAM:

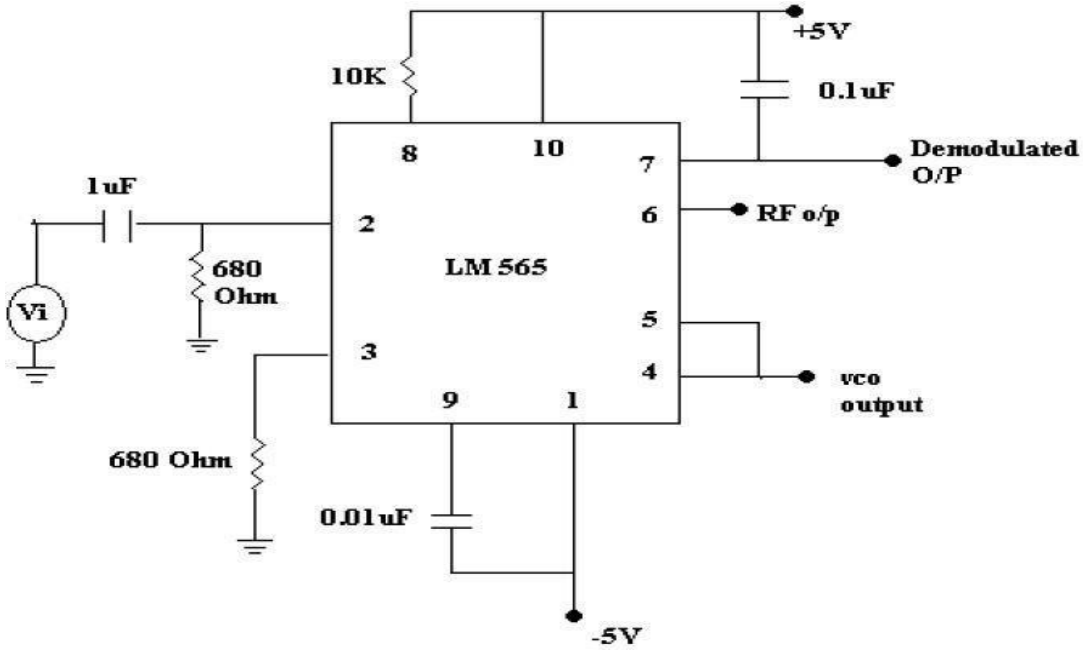

Fig 10: circuit diagram of PLL using IC 565

THEORY:

The fig.10. shows the phase-locked loop (PLL) in its basic form. The PLL consists of i) a phase detector ii) a low pass filter and iii) a voltage-controlled oscillator as shown.

The phase detector, or comparator compares the input frequency f_{IN} with the feedback frequency f_{OUT}. The output of the phase detector is proportional to the phase difference between f_{IN} and fout. The output voltage of a phase detector is a dc voltage and therefore is often referred to as the error voltage. The

output of the phase detector is then applied to the low-pass filter, which removes the high-frequency noise and produces a dc level. This dc level, in turn, is the input to the voltage-controlled oscillator (VCO). The filter also helps in establishing the dynamic characteristics of the PLL circuit. The output frequency of the VCO is directly proportional to the input dc level. The VCO frequency is compared with the input frequencies and adjusted until it is equal to the input frequencies. In short, the phase-locked loop goes through three states: free running, capture, and phase lock.

Before the input is applied, the phase-locked loop is in the free-running state. Once the input frequency is applied, the VCO frequency starts to change and the phase-locked loop is said to be in the capture mode. The VCO frequency continues to change until it equals the input frequency, and the phase-locked state. When phase locked, the loop tracks any change in the input frequency through its repetitive action.

Lock Range: The range of frequencies over which the PLL can maintain lock with incoming signal is called the " Lock Range" or "Track Range"

FL= $8f_0/V$ where V= + V –(–V), where f_0 is free running frequency.

Capture range: The range of frequencies over which the PLL can acquire lock with an input signal is calledthe capture range.

PROCEDURE:

1. Apply +5v to pin 10 and –5v to pin 1 of LM565
2. Connect R_1= 10KΩ resistor from pin 8 to10 and C_1 =0.01µ F capacitor from pin 9 to 1.
3. Connect 680Ω resistor from pin 2 & pin 3 to ground.
4. Connect pin 4(VCO o/p) to CRO and measure its frequency. This frequency is called the free running frequency, fo.
5. Calculate f0 theoretically using the formula f_0 = 1.2 /4R1C1 and compare it with practical value.
6. Connect the circuit as shown in fig.
7. Apply square wave at the input with amplitude of 2Vpp and also connect it to channel 1 of CRO.
8. Connect pin 4(VCO o/p) to channel 2 of CRO.
9. Vary the input signal frequency in steps and measure its corresponding o/p frequency.
10. Find the lock range and capture range from the obtained data.

TABULAR COLUMN:

S.No	Input frequency in HZ	Output frequencyin HZ	F_c in HZ	F_L inHZ

Applications:

1. Frequency multiplier
2. Frequency synthesizer
3. FM demodulator
4. FSK demodulator
5. AM detection
6. Frequency translation

RESULT: Free running frequency, lock range and capture range of PLL are measured practically and compared with theoretical values.