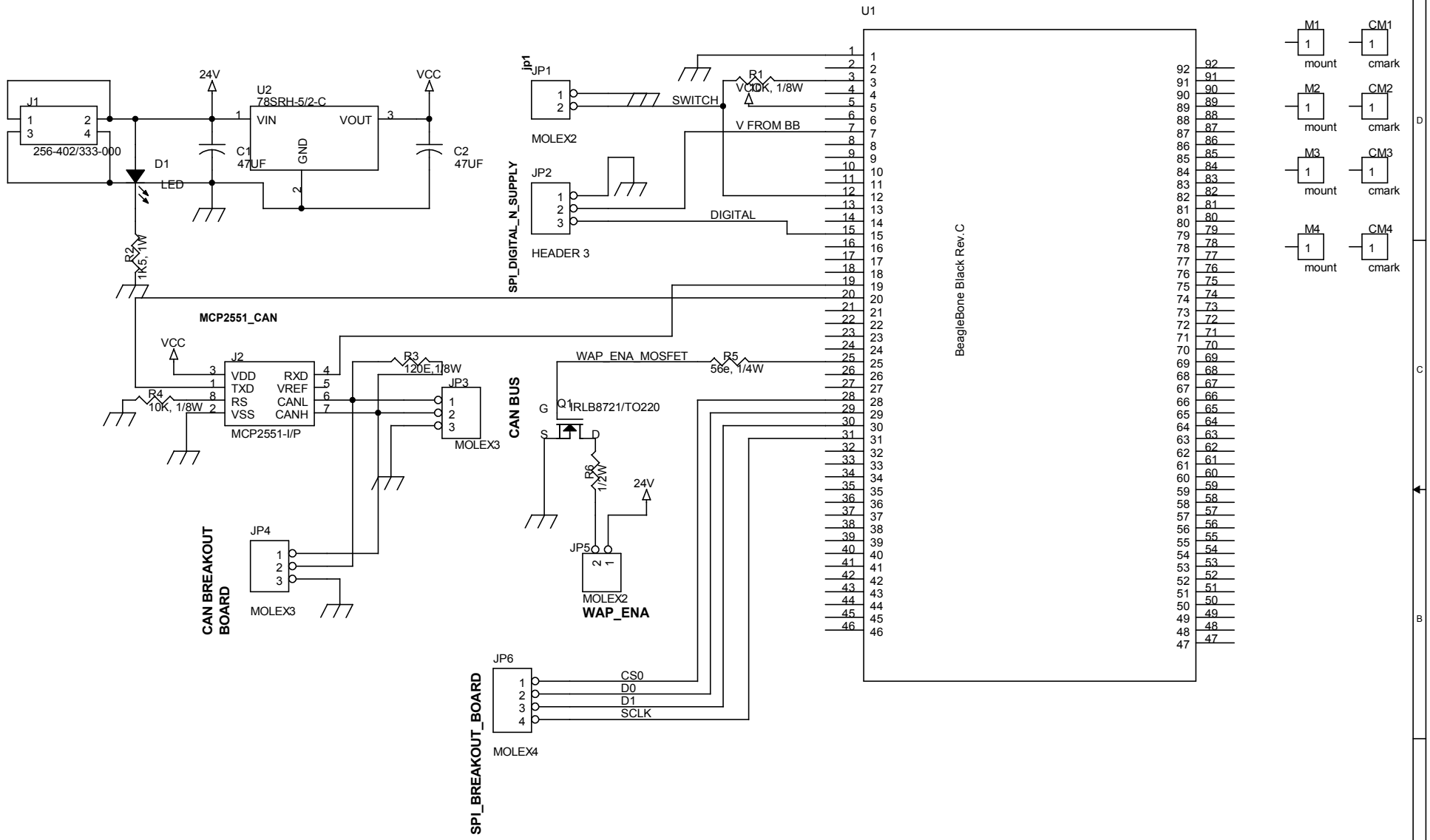

Created using easyPDF Printer
Click here to purchase a license to remove this image