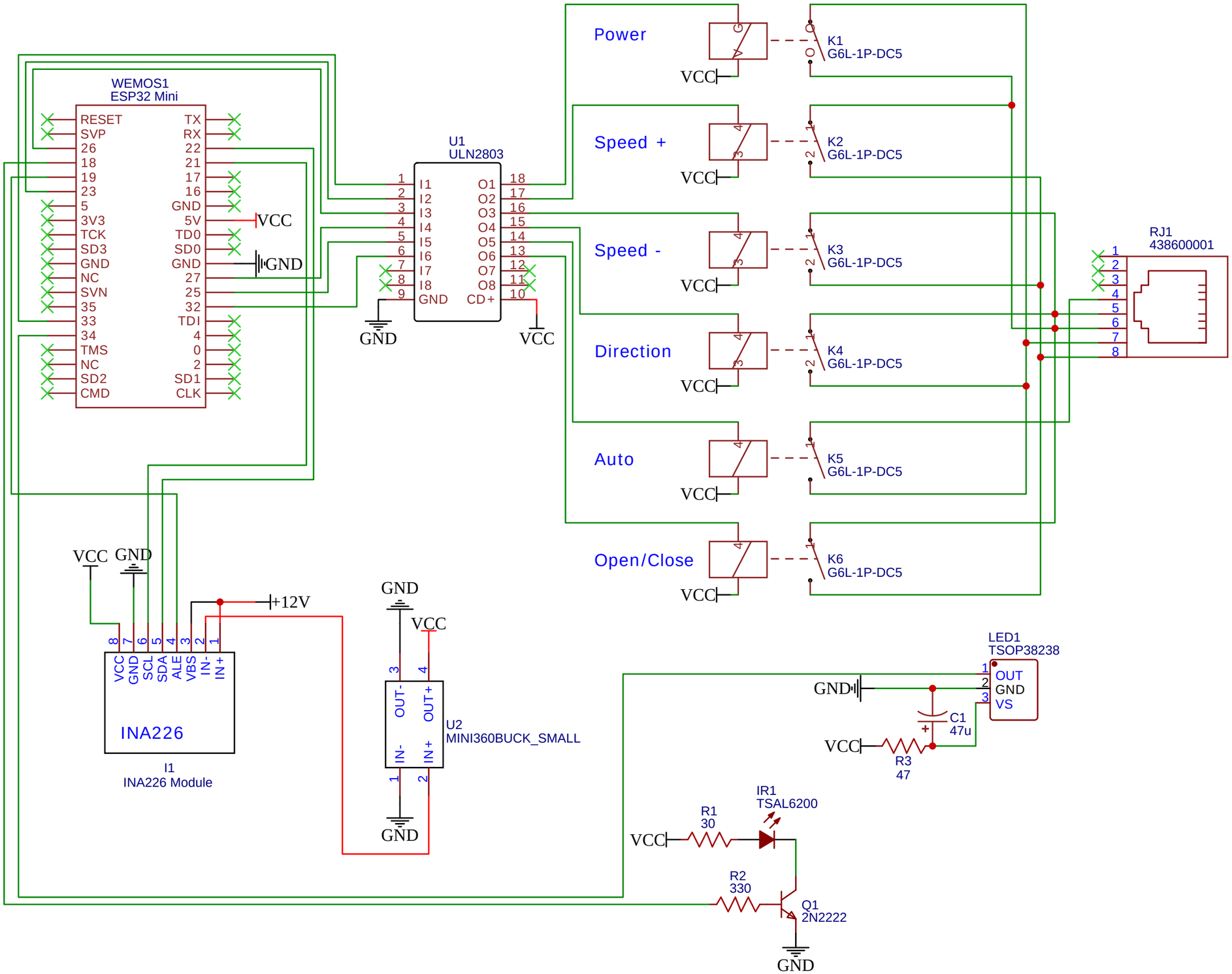

TITLE: MaxxFan WiFi/IR Controller		REV: 1.0
嘉立创EDA	Company: Neal Carney	Sheet: 1/1
	Date: 2023-03-21 Drawn By: ncarney	