KIT-KALAIGNARKARUNANIDHI INSTITUTE OF TECHNOLOGY
COIMBATORE - 641402

Approved by AICTE Affiliated to Anna University, Chennai
Accredited With 'A' Grade by NAAC & By NBA

DEPARTMENT OF ELECTRONICS AND COMMUNICATION ENGINEERING
Review 3

Title: *Smart Wearable Safety System With Fall Detection And Emergency Alert*

BATCH NO
19

TEAM MEMBERS
Asmi A G
Anu A
Gowtham S

SUPERVISOR
Ms. M Gokila

OBJECTIVE

To develop a smart wearable safety system that detects falls and automatically sends emergency alerts with real-time location.

INTRODUCTION

- This project proposes a smart wearable safety device based on IoT technology. It integrates fall detection, GPS tracking, GSM emergency alerts, and transport assistance into a compact unit.
- An MPU6050 sensor monitors motion and detects sudden acceleration changes indicating a fall. Once verified, the system sends an emergency SMS with the user's real-time location via a GSM module.
- The GPS module provides latitude and longitude coordinates, which are converted into a Google Maps link for easy access.
- The device also offers transport assistance by calculating the distance to predefined destinations and alerting the user through vibration or a buzzer when nearing the location.
- It is designed to be cost-effective, portable, and suitable for real-world use.

Problem statement

- Accidental falls and emergency situations are major safety concerns, especially during travel. In many cases, victims are unable to call for help due to unconsciousness or panic.
- Existing wearable safety devices are often expensive and depend on smartphones or Wi-Fi connectivity, limiting accessibility.
- There is a need for a low-cost, standalone wearable system that:
  - Automatically detects falls
  - Provides real-time location tracking
  - Sends emergency alerts without user intervention
  - Assists in safe travel

LITERATURE OVERVIEW....

- IoT-based wearable systems enable real-time fall detection using sensors, GPS, and communication modules.
- Tseng et al. achieved 99.7% accuracy using IMU sensors with GPS and NB-IoT alerts.
- Nathala et al. developed an ESP32 + MPU6050 system with 95% accuracy and real-time notifications.
- MPU6050-based studies confirm fall detection using threshold values.
- Campanella et al. implemented deep learning on MCU for embedded fall detection with GSM alerts.
- GPS (NEO-7M) and GSM (SIM800L) enable low-cost SMS alerts without smartphone dependency.

Proposed System Block Diagram

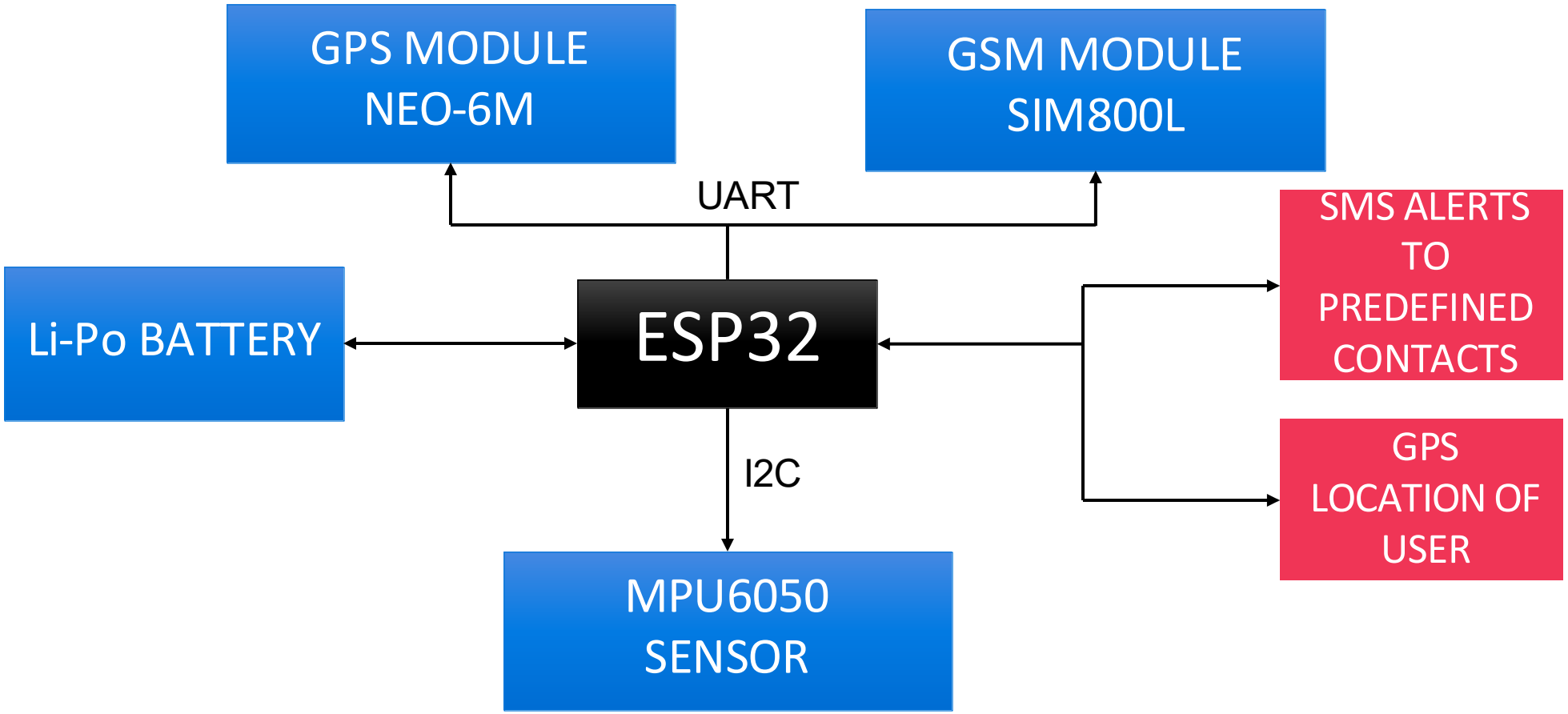

PROJECT WORK FLOW

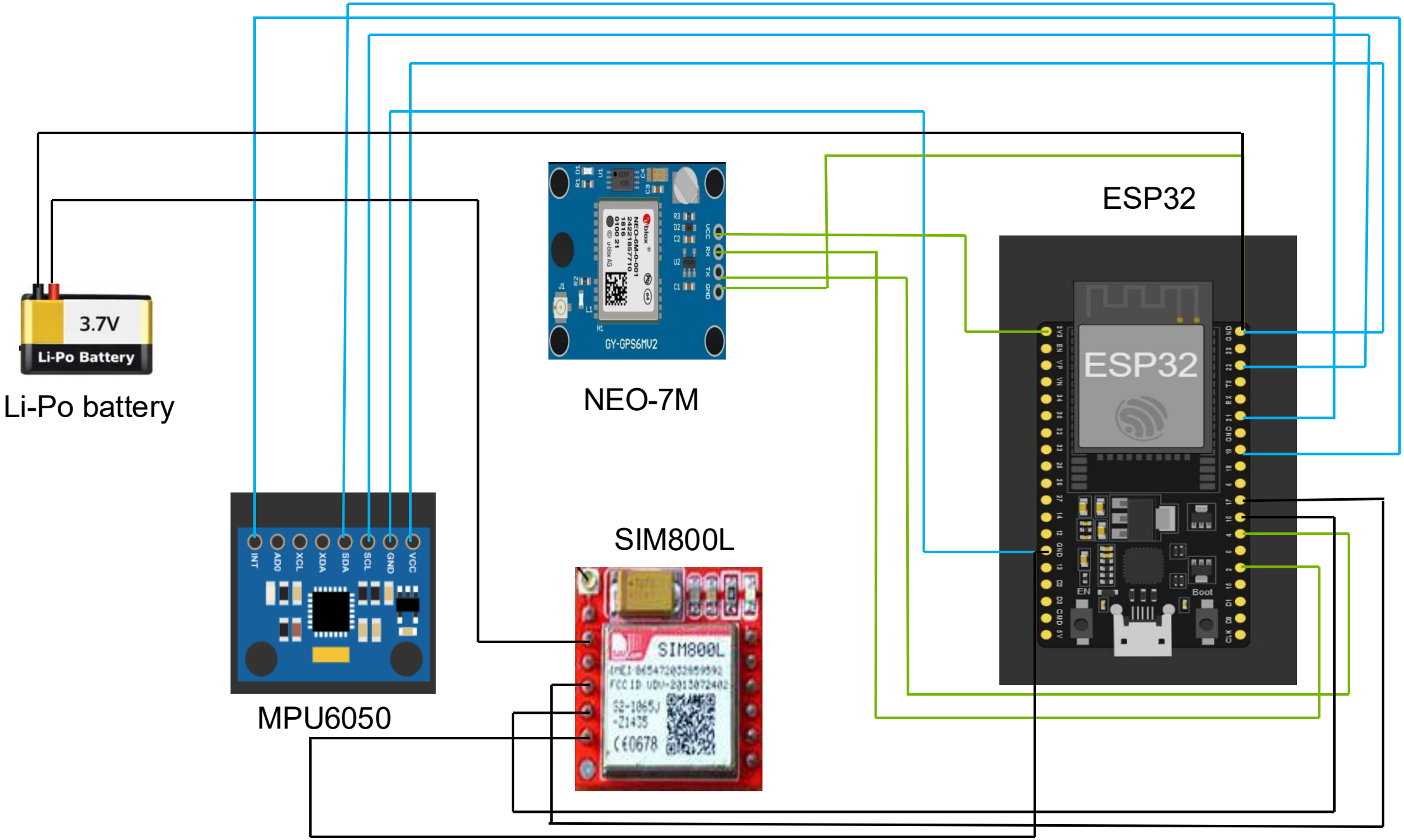

SIMULATION TOOL

Simulation Tool Arduino IDE is used for programming ESP32.Serial Monitor is used to verify sensor data and GSM communication.

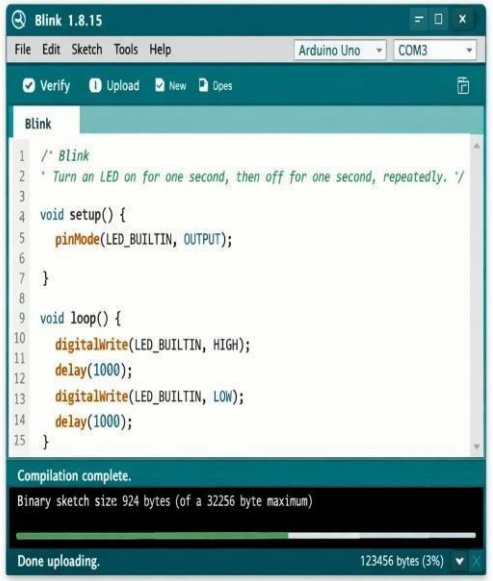

OUTPUT RESULT

Output:

- Fall detection with threshold 2.5g
- Alert message to predefined number.
- GPS signal unavailable indoors. Device successfully detects fall and triggers alert. Outdoor testing planned for GPS coordinate validation.

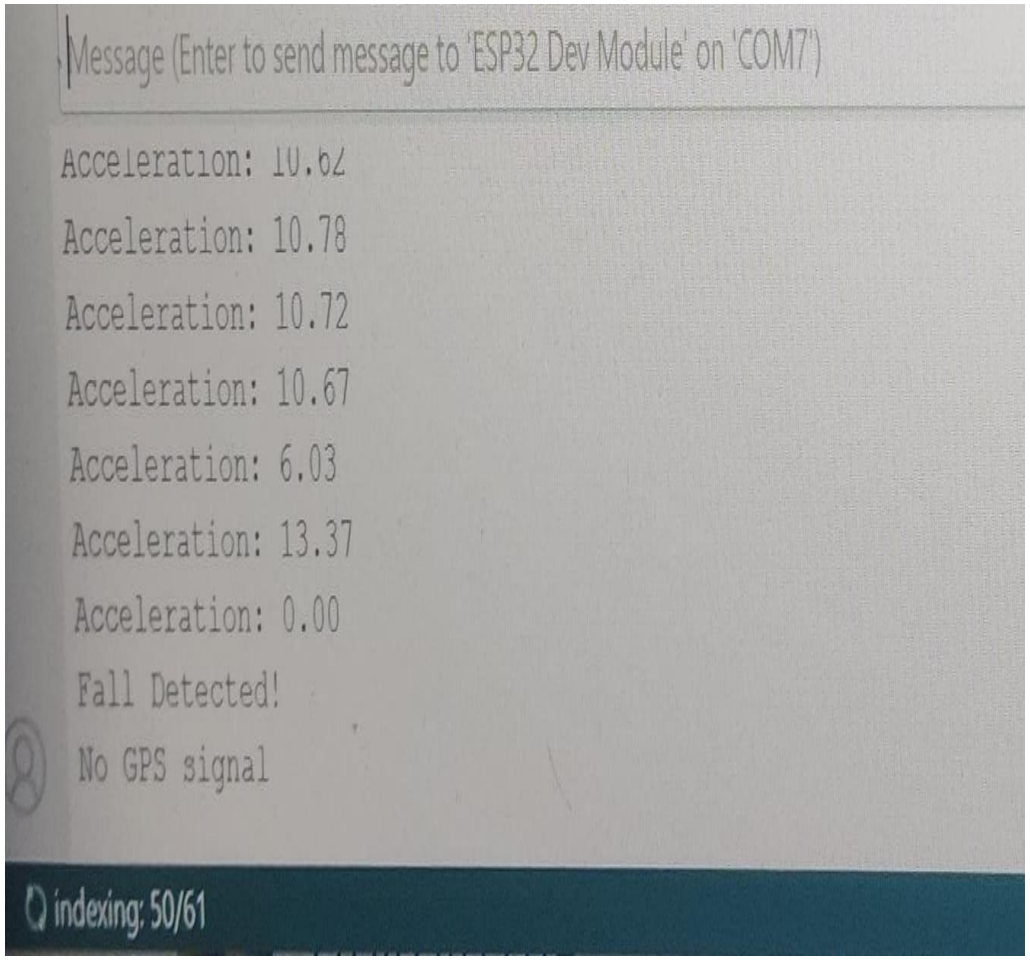

MAPING OF SDG

This project aligns with:

SDG 3 – Good Health and Well-being

By providing quick emergency assistance and reducing risk during accidents.

Work Completion status

S.No	Work Description	Completion Percentage
1.	Literature Survey	100%
2.	Problem Identification	100%
3.	Hardware Selection	100%
4.	Block Diagram Design	100%
5.	Implementation	100%

Paper preparation status

S.No	Description	Completion Status
1	Abstract	Completed
2	Introduction Literature Survey	Completed
3	Proposed System and Methodology	Completed
4	Experimental results	Completed
5	Conclusion and Reference	Completed

REFERENCES

S.NO	REFERENCE DETAILS
1.	J.-J. Li et al., “Travelling Assistance Smart Wearables,” J. Fiber Bioengineering and Informatics, 2025.
2.	I. M. Kamal et al., “Camera-Based Navigation System,” Sohag Engineering Journal, 2023.
3.	T. L. Narayani et al., “Design of Smart Cane with Integrated Camera Module,” ICAIS, 2024.
4.	“Analysis of Navigation Assistants: A Systematic Review,” IEEE Access, 2023.
5.	Smart Bracelet (i-Fit), Melaka International Intellectual Exposition, 2024.
6.	A. Ramadhan, “Wearable Smart System for Visually Impaired,” Sensors, 2024.

REFERENCES

S.NO	REFERENCE DETAILS
7.	Nathala, A. R., et al. "ESP32-Based IoT Framework for Fall Detection and Caregiver Notification." International Journal of Research and Innovation in Social Science, vol. 9, issue 9, 2025, pp. 9175–9182..
8.	Standalone Wearable Fall Detection System Using ESP32 and GSM-Based Emergency Alerting.IARJSET, 2025.
9.	Real-time Location Tracker for Critical Health Patient using Arduino, GPS Neo6m and GSM Sim800L in Health Care. ResearchGate, 2020.
10.	Purnima, K., et al. "An IoT-based Smart Wearable Safety Device using GSM, GPS, and ESP32-CAM." 3rd International Conference on Sustainable Computing and Data Communication Systems (ICSCDS), 2025, pp. 1883–1887.
11.	A Two-Step Fall Detection Algorithm Combining Threshold-Based Method and Machine Learning.Bulletin of the Polish Academy of Sciences, 2021.
12.	IoT-Powered Emergency Button for Women's Safety.JSRT Journal, 2025.