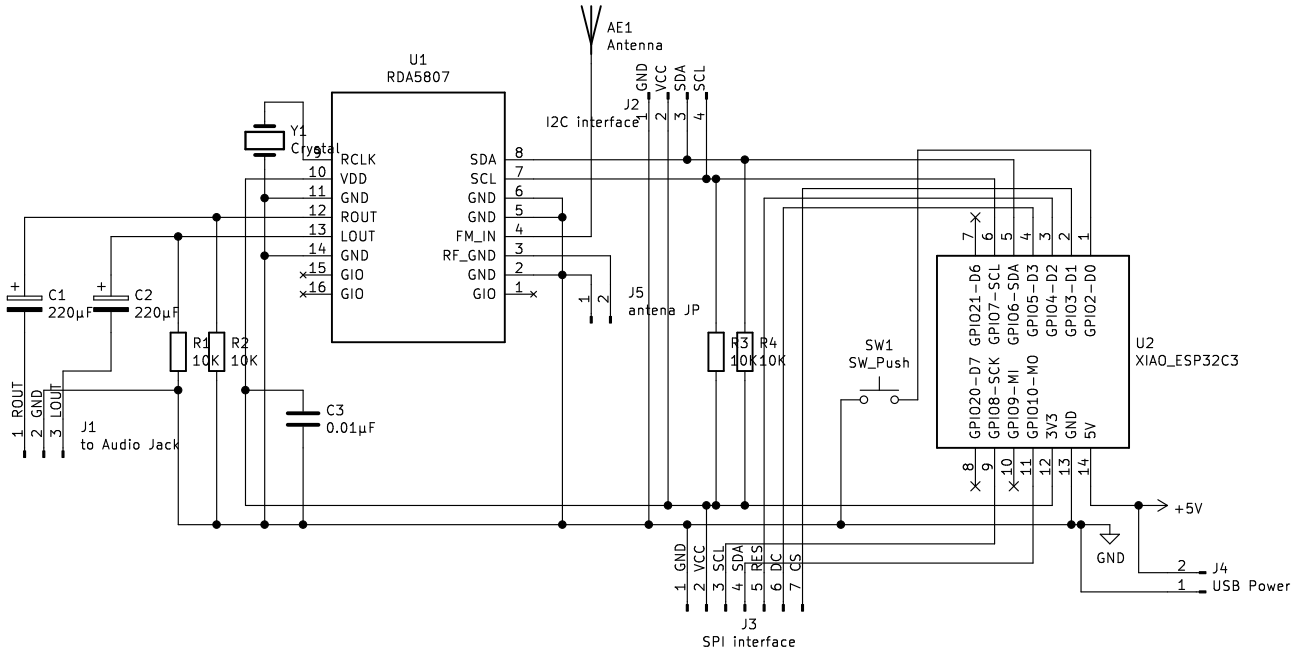

H1 MountingHole
H2 MountingHole
H3 MountingHole
H4 MountingHole

Sheet: /
File: rda5807_esp32c3.sch

Title: rda5807 esp32c3

Size: A4	Date: 2024-01-15	Rev:
KiCad E.D.A. kicad (5.1.12)-1		Id: 1/1