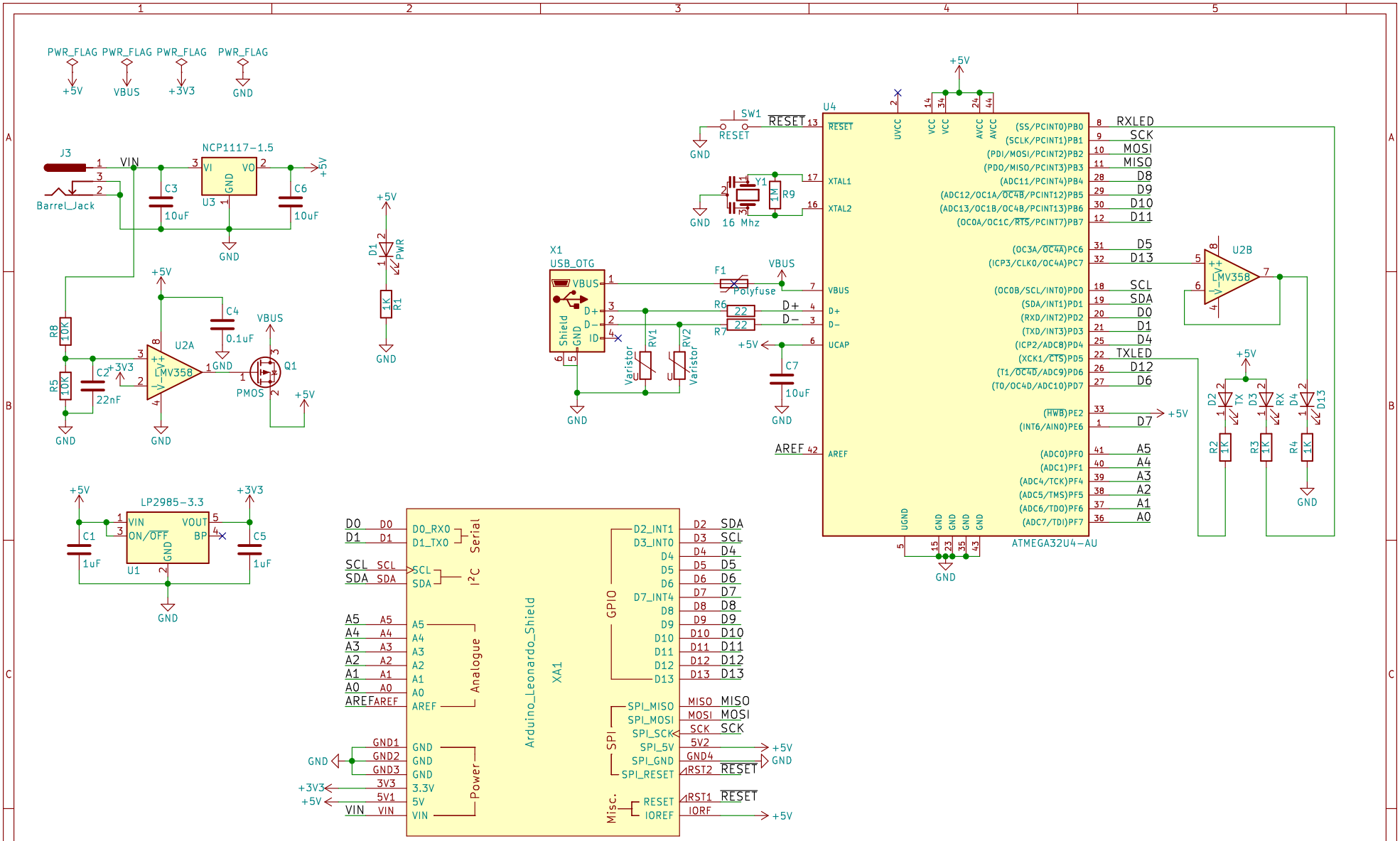


https://en.wikipedia.org/wiki/Vitruvian_Man#/media/File:Da_Vinci_Vitruve_Luc_Viatour.jpg

https://leonardodavinci.stanford.edu/submissions/clabaugh/history/leonardo.html

https://rheingoldheavy.com/arduino-from-scratch-part-5-selecting-comparator-parts/

648.ken@gmail.com
**www.MakersBox.us**

Sheet: /
File: project.sch

**Title: Leonardo 324U**

| | | |
|---|---|---|
| Size: A | Date: 2018-08-10 | **Rev: 0.0** |
| KiCad E.D.A. kicad 4.0.7 | | Id: 1/1 |