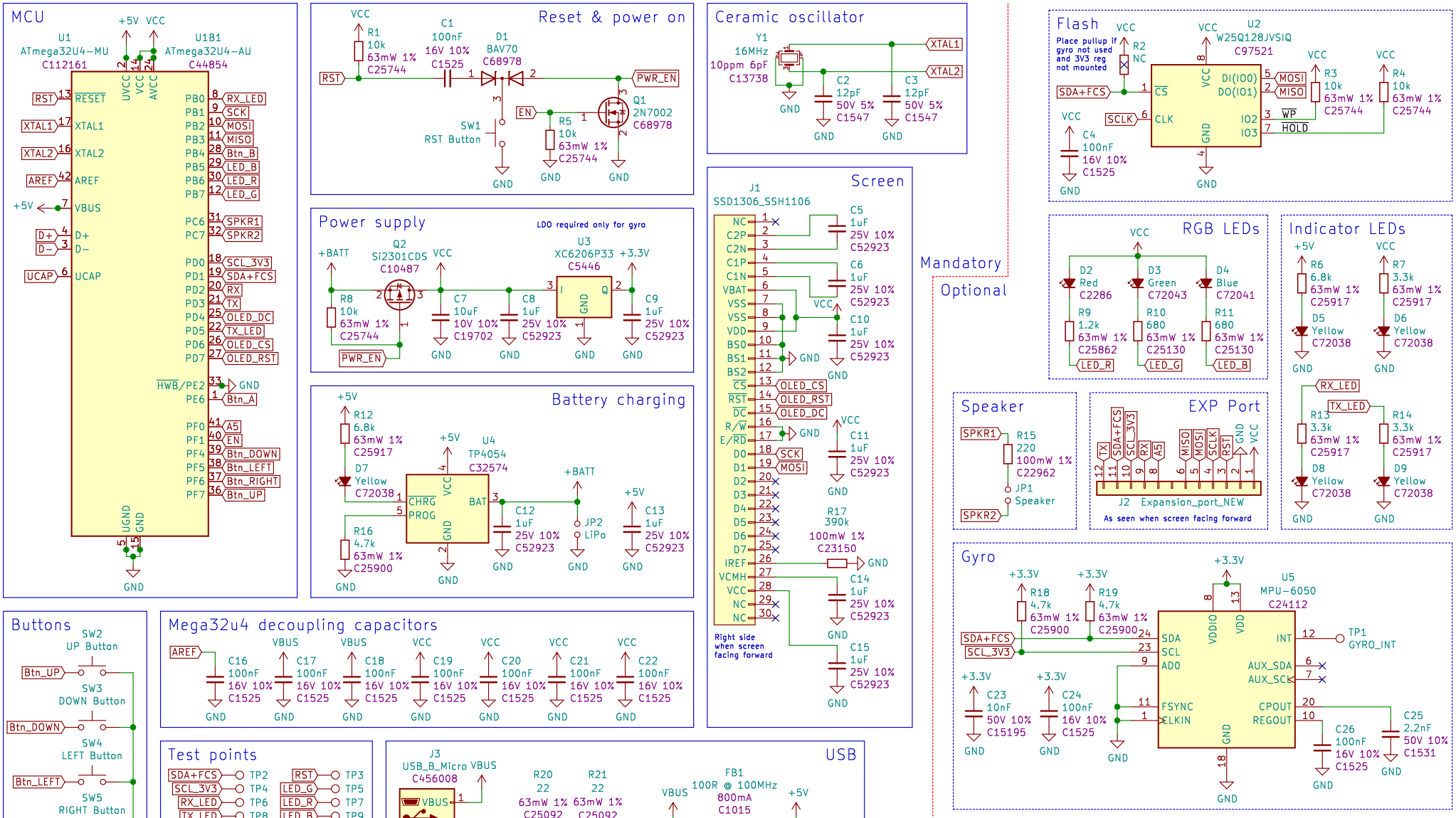
MCU
U1
ATmega32U4-MU
C112161
U1B1
ATmega32U4-AU
C44854
Reset & power on
R1 10k 63mW 1% C25744
C1 100nF 16V 10% C1525
D1 BAV70 C68978
SW1 RST Button
R5 10k 63mW 1% C25744
Q1 2N7002 C68978
Ceramic oscillator
Y1 16MHz 10ppm 6pF C13738
C2 12pF 50V 5% C1547
C3 12pF 50V 5% C1547
Flash
Place pullup if gyro not used and 3V3 reg not mounted
R2 NC
U2 W25Q128JVSIQ C97521
C4 100nF 16V 10% C1525
R3 10k 63mW 1% C25744
R4 10k 63mW 1% C25744
Power supply
LDO required only for gyro
Q2 Si2301CDS C10487
U3 XC6206P33 C5446
R8 10k 63mW 1% C25744
C7 10uF 10V 10% C19702
C8 1uF 25V 10% C52923
C9 1uF 25V 10% C52923
Screen
J1 SSD1306_SSH1106
C5 1uF 25V 10% C52923
C6 1uF 25V 10% C52923
C10 1uF 25V 10% C52923
C11 1uF 25V 10% C52923
R17 390k 100mW 1% C23150
C14 1uF 25V 10% C52923
C15 1uF 25V 10% C52923
Right side when screen facing forward
Mandatory
Optional
RGB LEDs
D2 Red C2286
D3 Green C72043
D4 Blue C72041
R9 1.2k 63mW 1% C25862
R10 680 63mW 1% C25130
R11 680 63mW 1% C25130
Indicator LEDs
R6 6.8k 63mW 1% C25917
R7 3.3k 63mW 1% C25917
D5 Yellow C72038
D6 Yellow C72038
R13 3.3k 63mW 1% C25917
R14 3.3k 63mW 1% C25917
D8 Yellow C72038
D9 Yellow C72038
Battery charging
R12 6.8k 63mW 1% C25917
D7 Yellow C72038
U4 TP4054 C32574
R16 4.7k 63mW 1% C25900
C12 1uF 25V 10% C52923
JP2 LiPo
C13 1uF 25V 10% C52923
Speaker
R15 220 100mW 1% C22962
JP1 Speaker
EXP Port
J2 Expansion_port_NEW
As seen when screen facing forward
Gyro
U5 MPU-6050 C24112
R18 4.7k 63mW 1% C25900
R19 4.7k 63mW 1% C25900
C23 10nF 50V 10% C15195
C24 100nF 16V 10% C1525
C26 100nF 16V 10% C1525
C25 2.2nF 50V 10% C1531
TP1 GYRO_INT
Buttons
SW2 UP Button
SW3 DOWN Button
SW4 LEFT Button
SW5 RIGHT Button
SW6 RIGHT Button
SW7 RIGHT Button
Mega32u4 decoupling capacitors
C16 100nF 16V 10% C1525
C17 100nF 16V 10% C1525
C18 100nF 16V 10% C1525
C19 100nF 16V 10% C1525
C20 100nF 16V 10% C1525
C21 100nF 16V 10% C1525
C22 100nF 16V 10% C1525
Test points
USB
J3 USB_B_Micro C456008
R20 22 63mW 1% C25092
R21 22 63mW 1% C25092
FB1 100R @ 100MHz 800mA C1015
C28 1uF 25V 10% C52923
C27 1uF 25V 10% C52923
TP16 USB_ID
~200mA LiPo charging (only PROTECTED LiPos)
~2mA on RGB LEDs @ 4.2V
~0.45mA on yellow (indicator) LEDs @ 3.7V
Uses NEW flash wiring and NEW expansion port pinout (SDA and flash CS shared)
Sheet: /
File: arduboy_AS_flavor.sch
Title: Arduboy Clone – AS Flavor
Size: A4
Date: 2021-10-10
Rev: 0.1
KiCad E.D.A. kicad (5.1.10)-1
Id: 1/1