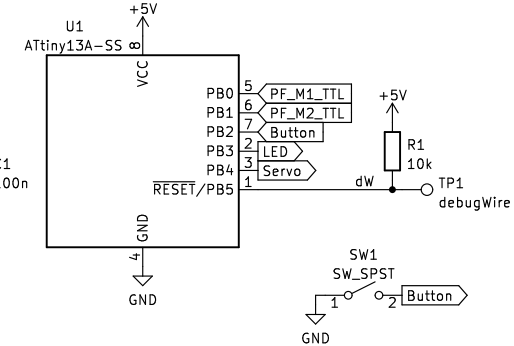

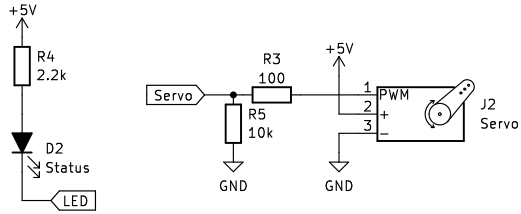

ServoLink variant

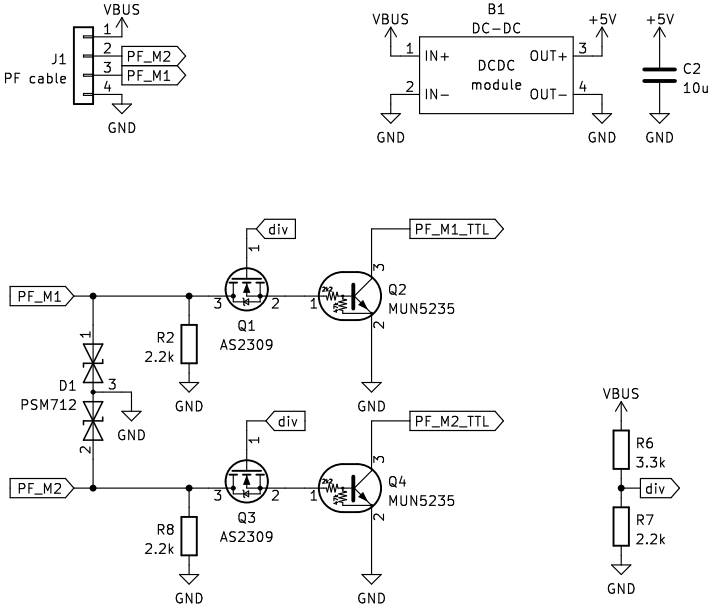

Common

AtomLinkMini variant

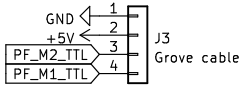

Aleksander Spyra

Sheet: /

File: AtomLinkMini-PCB.kicad_sch

Title: AtomLink Mini / ServoLink

Size: A5	Date: 2023-06-28	**Rev: v1.0**
KiCad E.D.A. kicad 7.0.9		Id: 1/1