Regulators

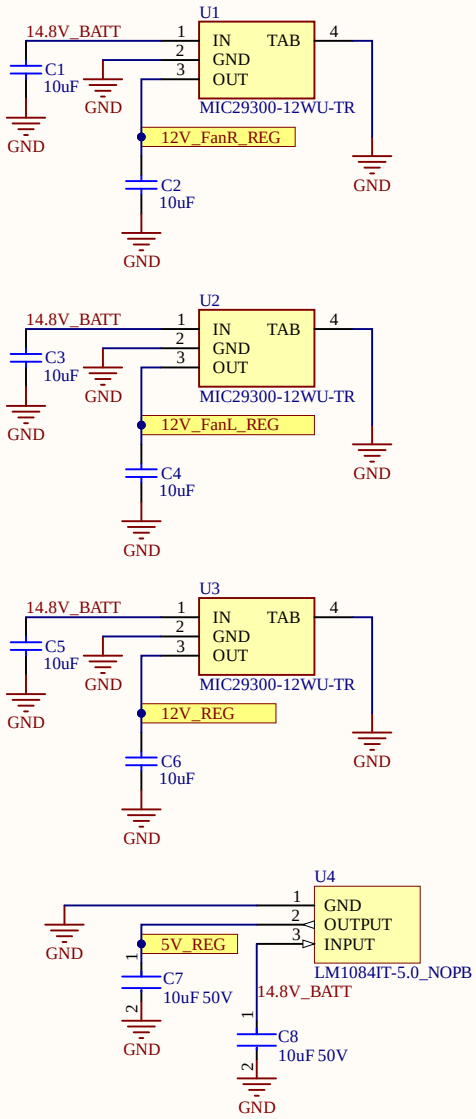

109 Pump (9A) Both Layers

54 Fan

20 INV

10

25 SDC

Thermal Fuses

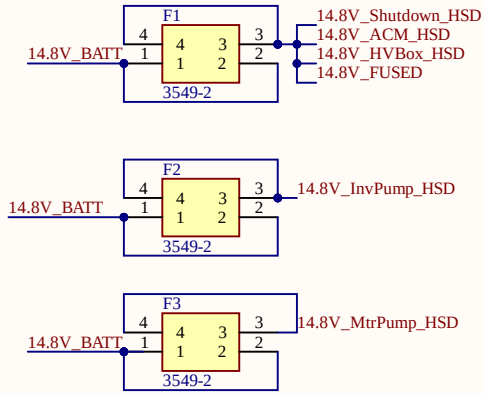

Connectors

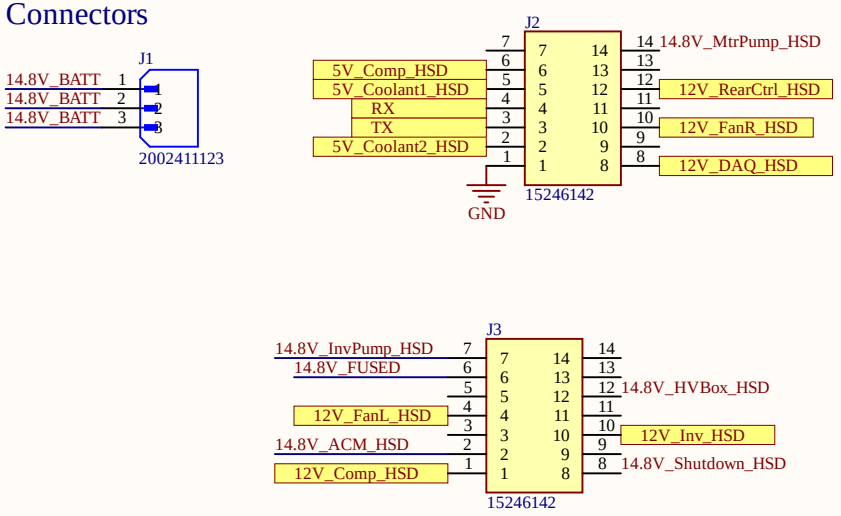

Title: Connectors and Regulators		
Size: A4	Number: 1	Revision: 2.0
Date: 1-18-2022		Sheet of
File: C:\Users\..\Connectors_and_Regs.SchDoc		Drawn By: Andrew Chen

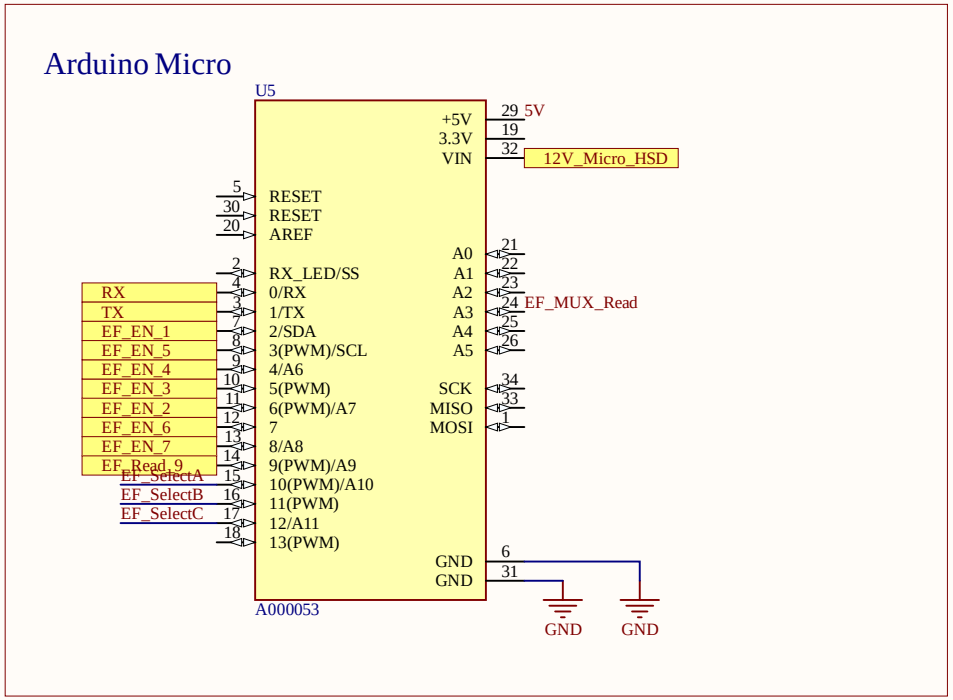

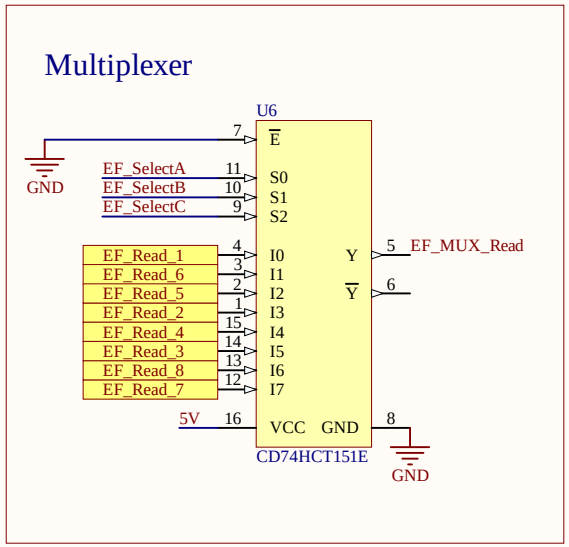

Title	Arduino Micro and MUX		
Size: A4	Number: 2	Revision: 2.0	
Date: 1-18-2022		Sheet of	
File: C:\Users\..\Micro.SchDoc		Drawn By: Andrew Chen	

Right Rad Fan Efuse

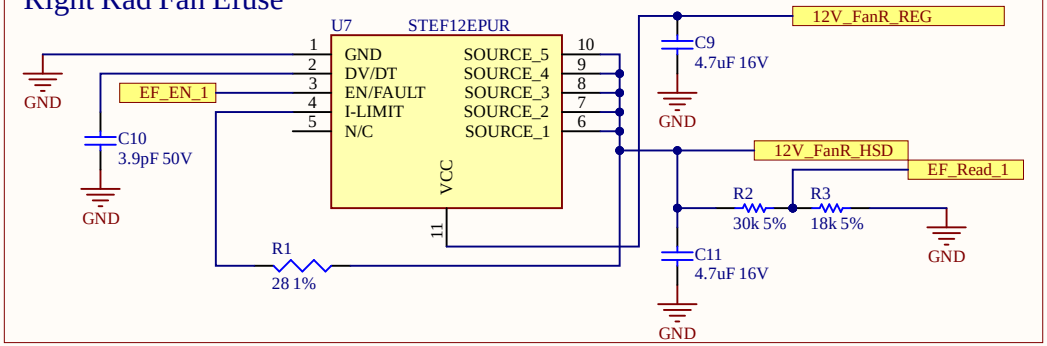

Left Rad Fan Efuse

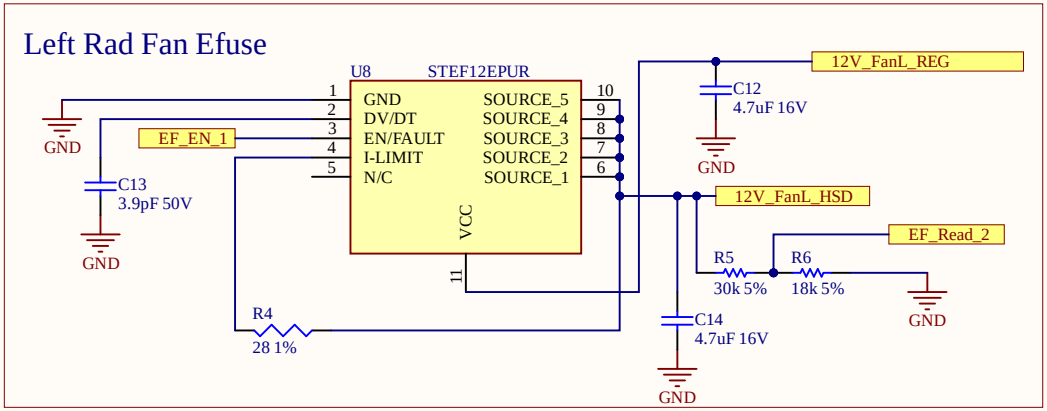

Arduino Micro 12V

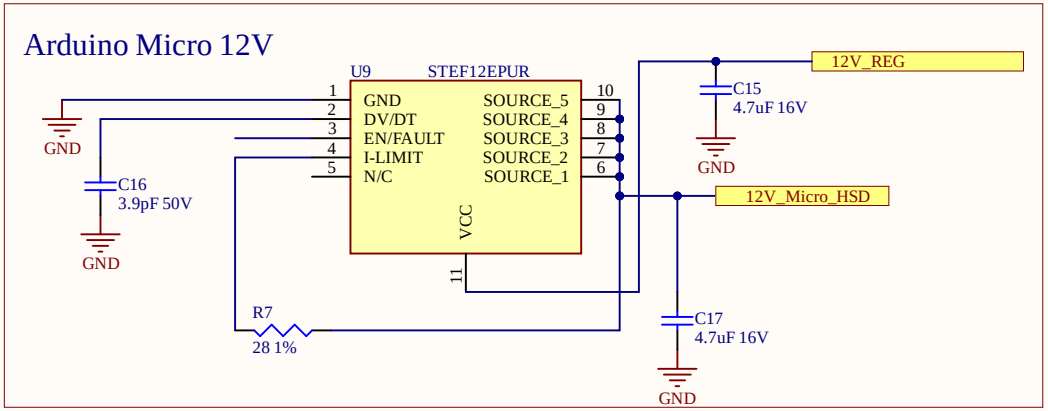

12V Rear Controller EFuse

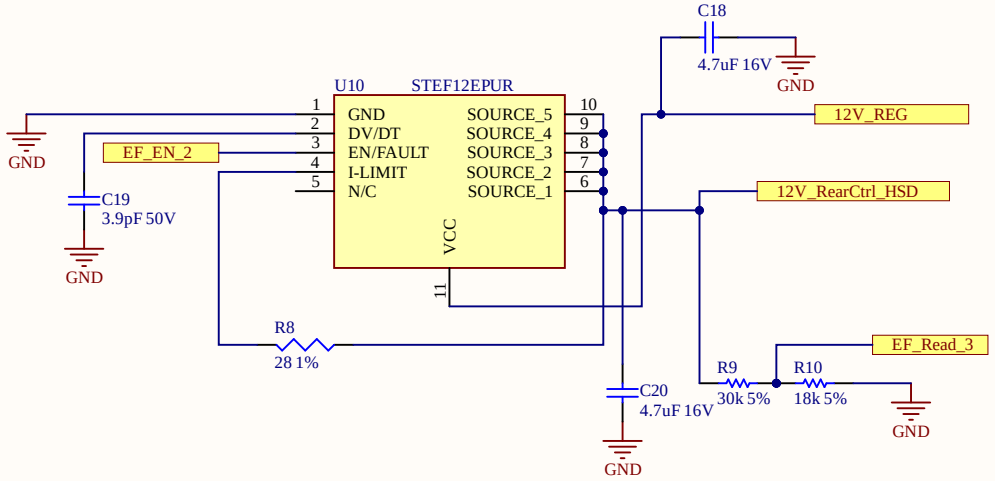

Use smaller tolerance resistors

Text

Title		
Size: A4	Number: 3	Revision: 2.0
Date: 1-18-2022		Sheet of
File: C:\Users\..\12V_Efuses1.SchDoc		Drawn By: Andrew Chen

DAQ Efuse

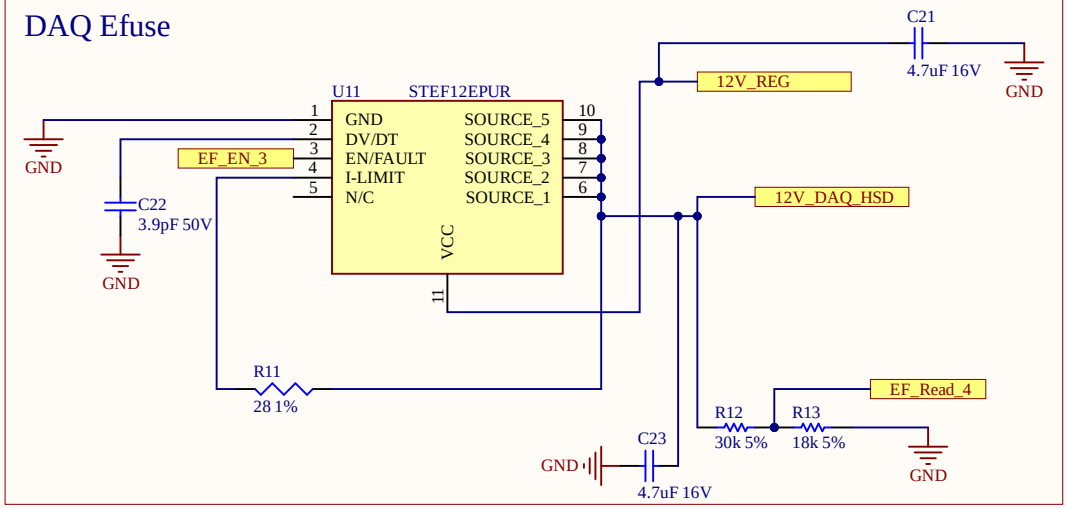

12V Efuse

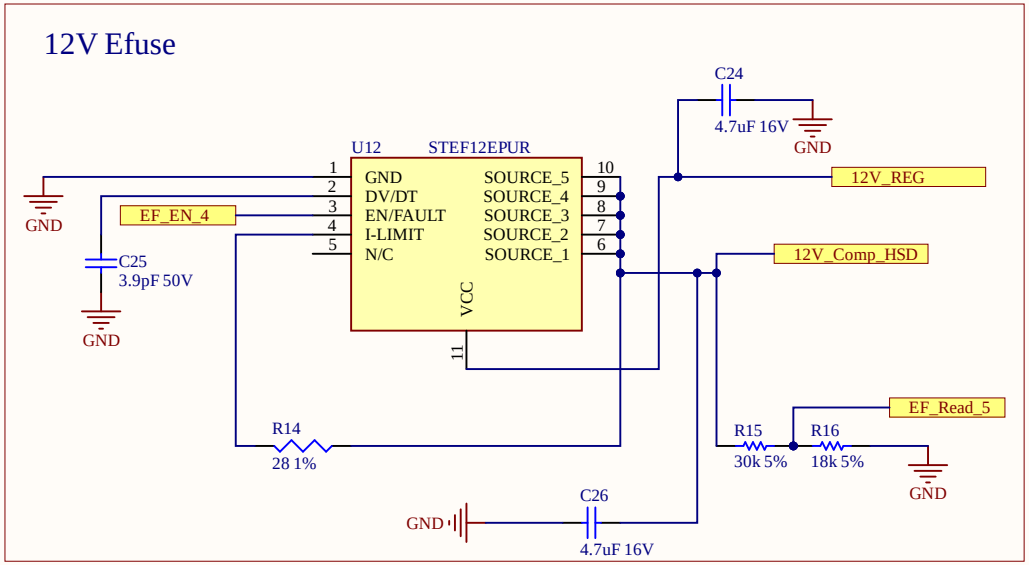

Inverter Efuse

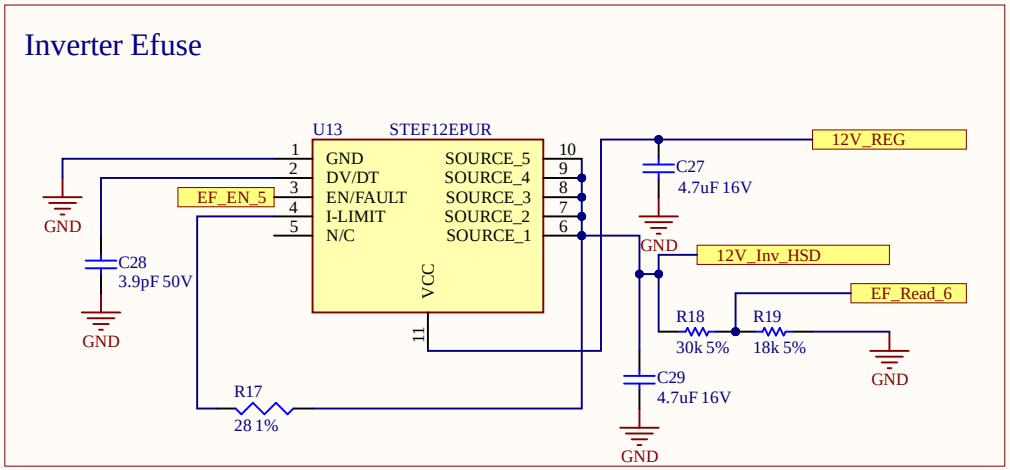

Title: 12V Efuses 2		
Size: A4	Number: 4	Revision: 2.0
Date: 1-18-2022		Sheet of
File: C:\Users\..\12V_Efuses2.SchDoc		Drawn By: Andrew Chen

Coolant Sensor Efuse 1

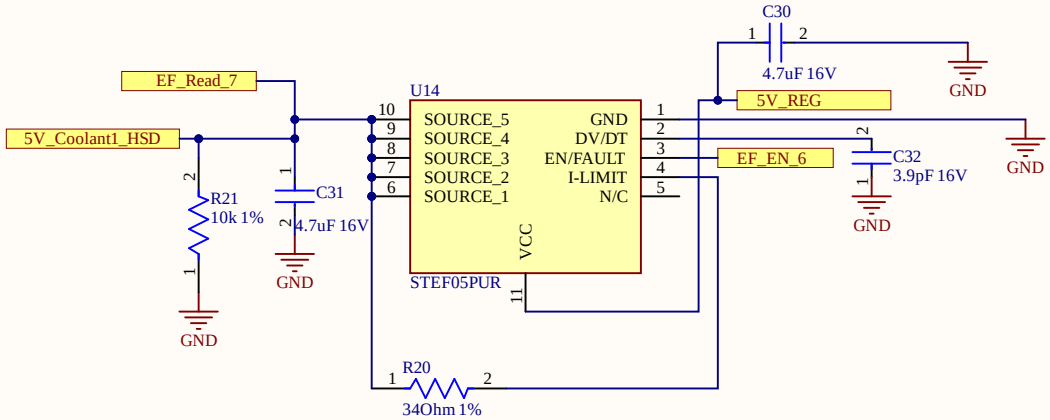

APPS Efuse

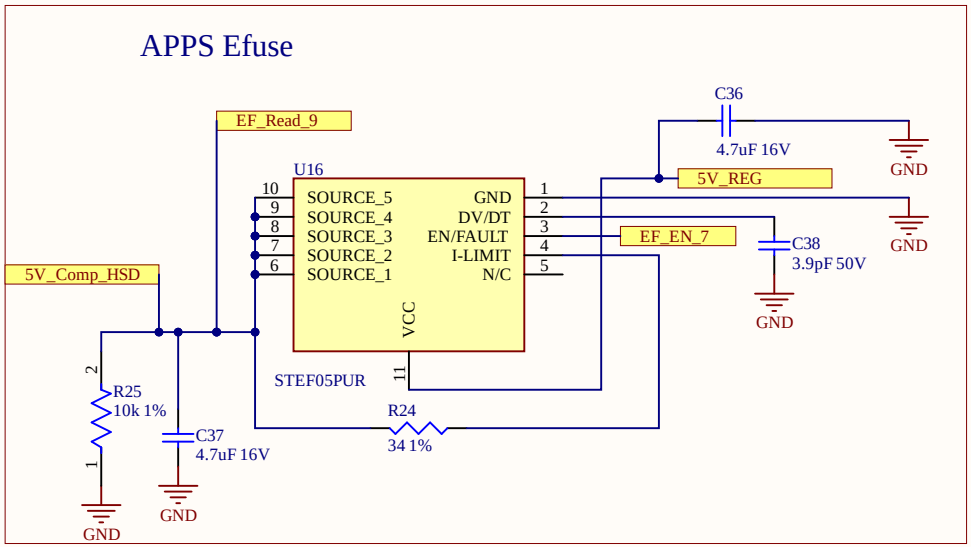

Coolant Sensor Efuse 2

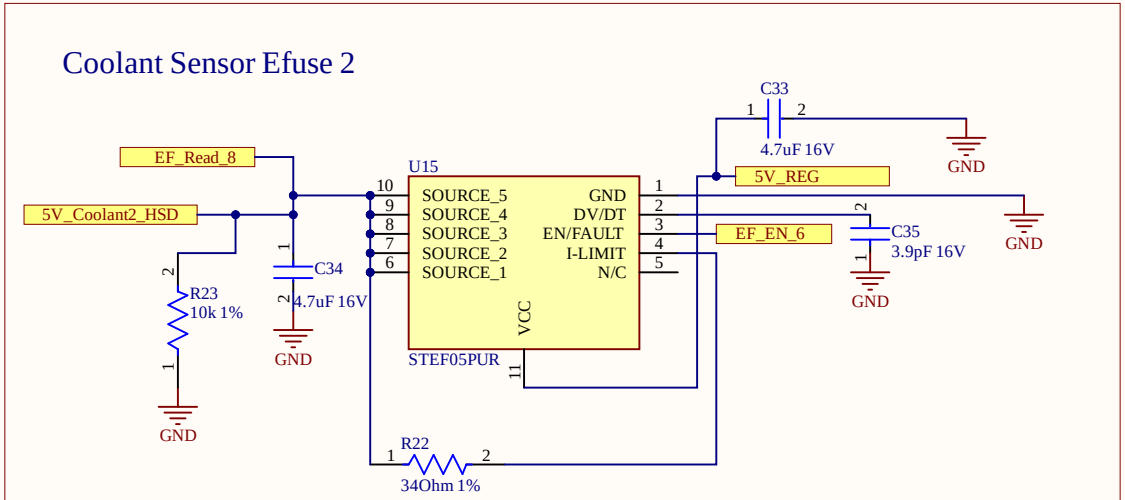

Title: 5V Coolant Efuses		
Size: A4	Number: 5	Revision: 2.0
Date: 1-18-2022		Sheet of
File: C:\Users\..\5V_EFuse.SchDoc		Drawn By: Andrew Chen

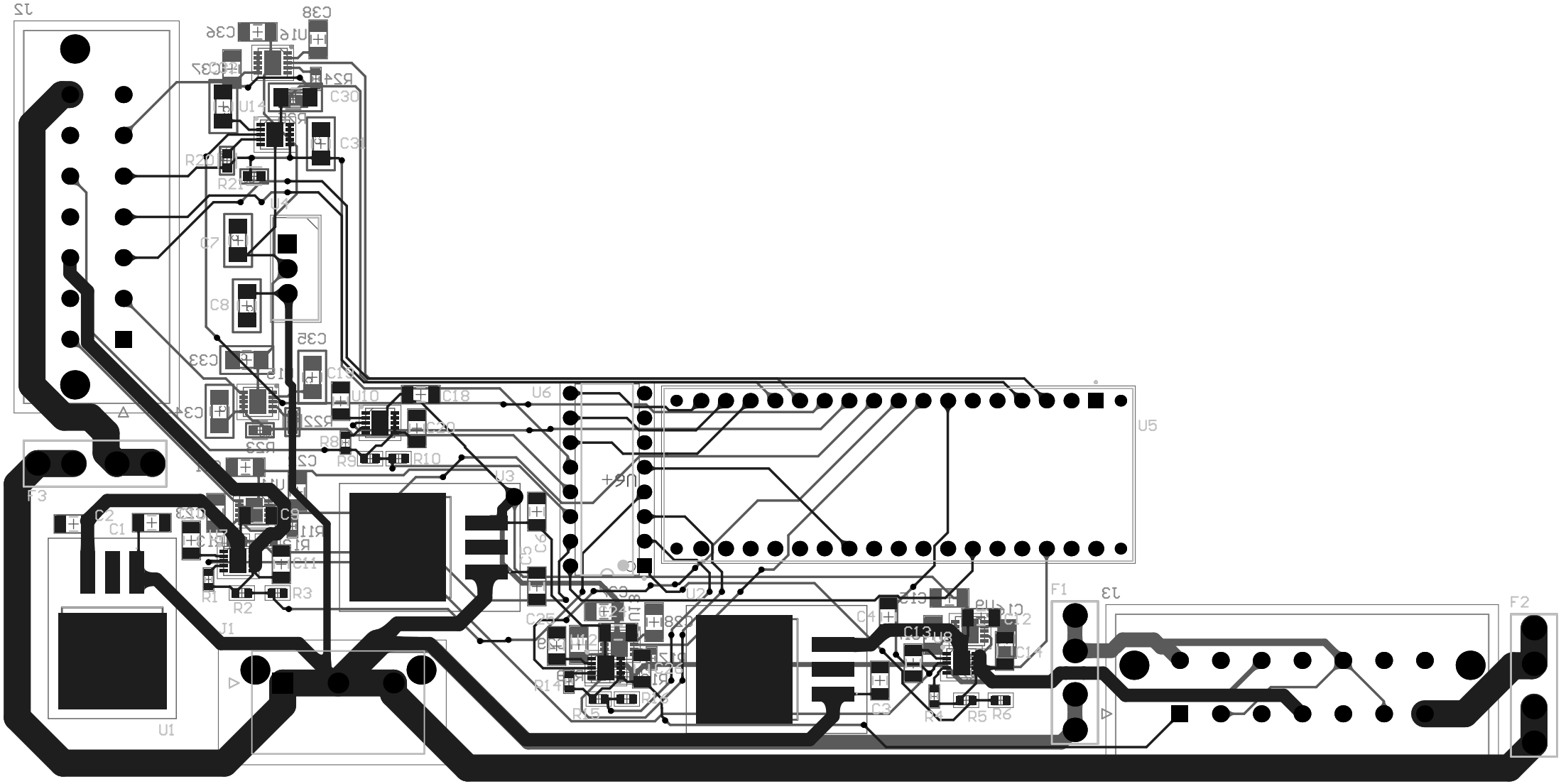

J2
C38
C36
U16
C37
R24
C30
U14
R20
C31
R21
U4
C7
C8
C35
C33
C19
U10
C18
U6
C34
R22
C20
R8
R9
R10
U5
R23
C2
U3
F3
C2
C1
C9
R11
C11
R1
R2
R3
J1
U1
C5
C6
U2
C25
C24
R14
R15
C3
C4
C13
C12
C14
R4
R5
R6
F1
J3
F2

Board Stack Report