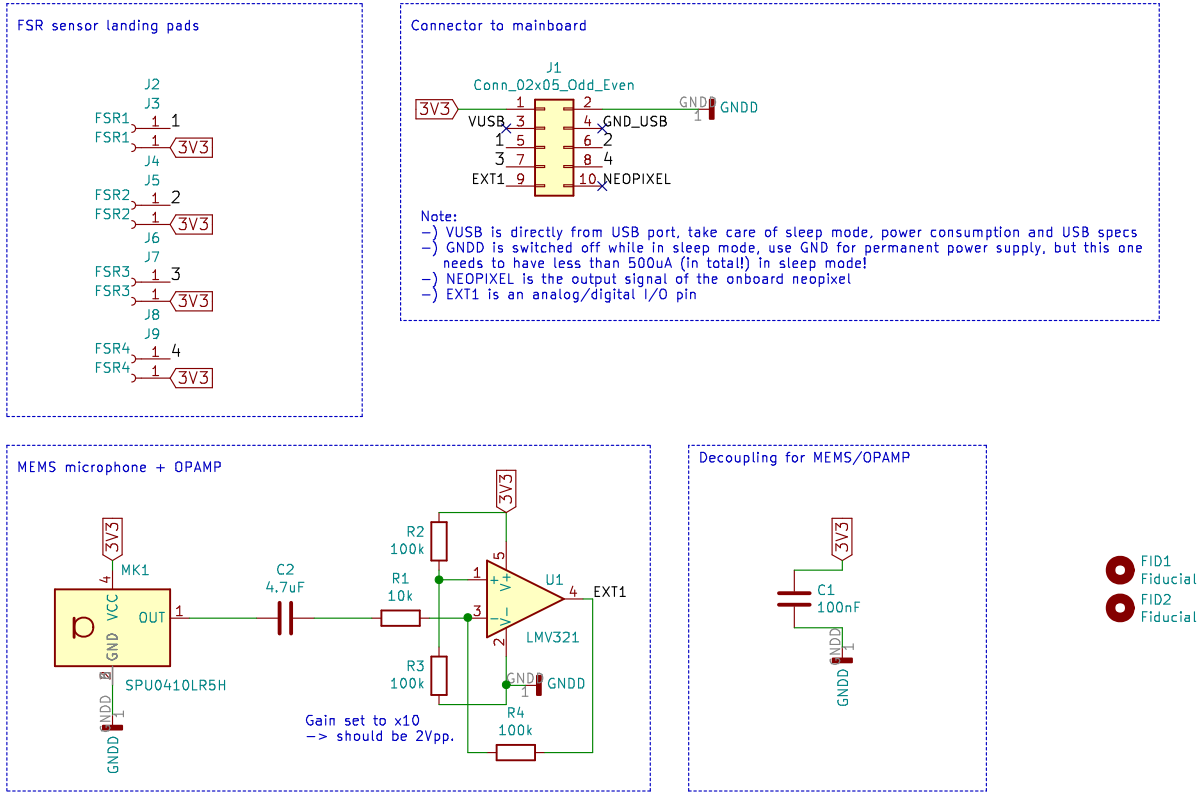

(c) Benjamin Aigner, 2018
beni@asterics-foundation.org
Art. Number: 30310201

AsTeRICS Foundation

Sheet: /
File: FLipMouse_sensor.sch

Title: FLipMouse3 - Sensor PCB FSR

Size: A4	Date: 2018-11-21	**Rev: v3.1**
KiCad E.D.A. kicad 5.0.1+dfsg1-3		Id: 1/1