Project Name:	**nixie_clock_tubes**
Description:	**Nixie Clock Tubes**
PN:	
Project Date:	**--/--/----**
Hardware version:	**0**
Variant:	**[No Variations]**
Status:	**Prototype**
Customer:	
Author:	*****
Approved By:	*****

CHANGELOG:

6/4/2020
* First drawing

Power Distribution

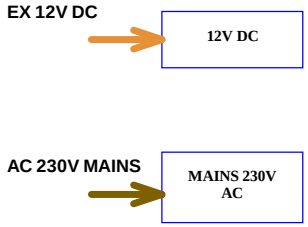

main.SchDoc

Board Schematic blocks

Title: *			
Project: nixie_clock_tubes			
Desc: Nixie Clock Tubes			
Ing. Daniele Basile asterix24@gmail.com		Variant: [No Variations]	
		Status: Prototype	
License: DB Home Copyright		Prj Rev: 0	Size: A3
File: summary.SchDoc	Rev: 0		
Date: 16/05/2026 Time: 00:21:17	Sheet 1 of 4		

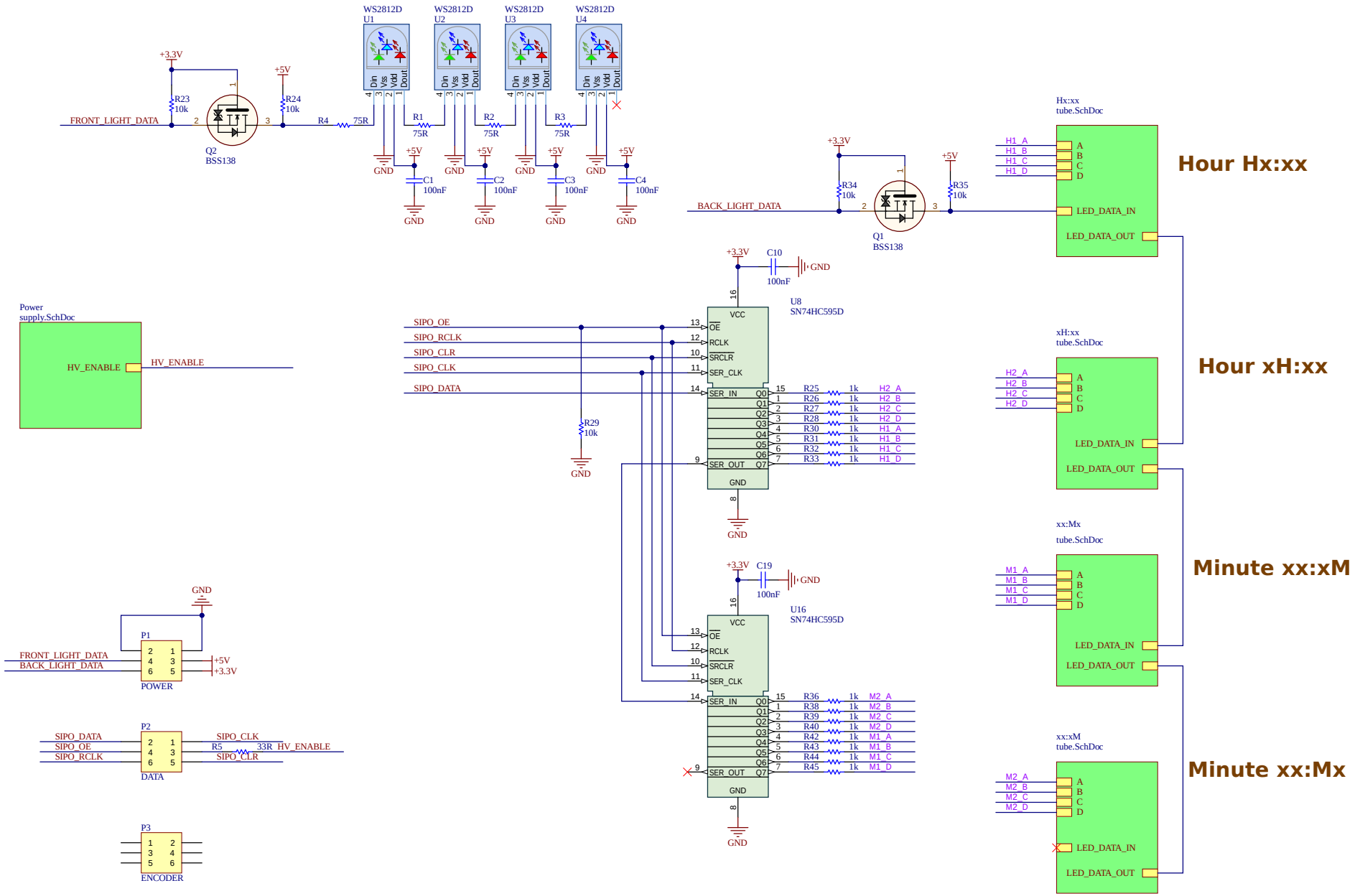

Title:	*
Project:	nixie_clock_tubes
Desc:	Nixie Clock Tubes
Ing. Daniele Basile asterix24@gmail.com	Variant: [No Variations] Status: Prototype
License: DB Home Copyright	Prj Rev: 0
File: main.SchDoc	Rev: 0
Date: 16/05/2026 Time: 00:21:17	Sheet 2 of 4
	Size: A3

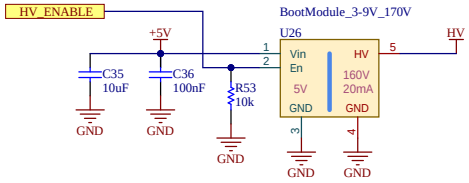

Title: *	
Project: nixie_clock_tubes	
Desc: Nixie Clock Tubes	
Ing. Daniele Basile asterix24@gmail.com	Variant: [No Variations] Status: Prototype
License: DB Home Copyright	Prj Rev: 0
File: supply.SchDoc / Rev: 0	Size: A3
Date: 16/05/2026 Time: 00:21:17 / Sheet 3 of 4	

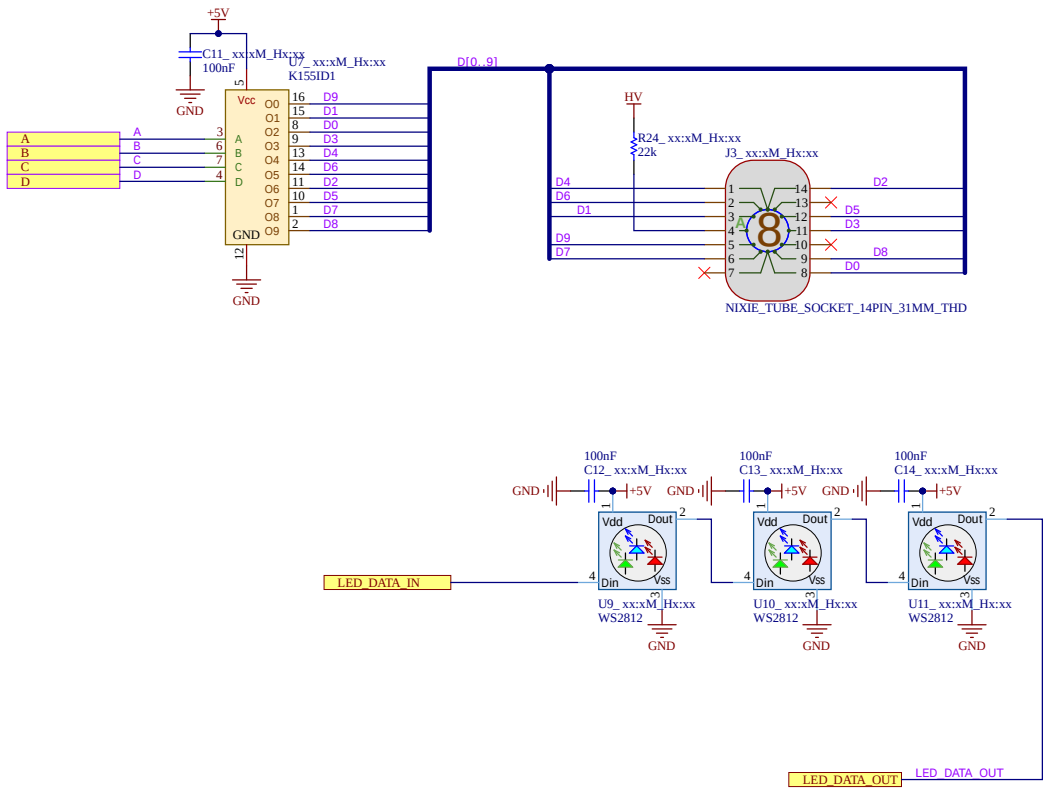

Title: *	
Project: nixie_clock_tubes	
Desc: Nixie Clock Tubes	
Ing. Daniele Basile asterix24@gmail.com	Variant: [No Variations] Status: Prototype
License: DB Home Copyright	Prj Rev: 0
File: tube.SchDoc / Rev: 0	Size: A3
Date: 16/05/2026 Time: 00:21:17 / Sheet 4 of 4	

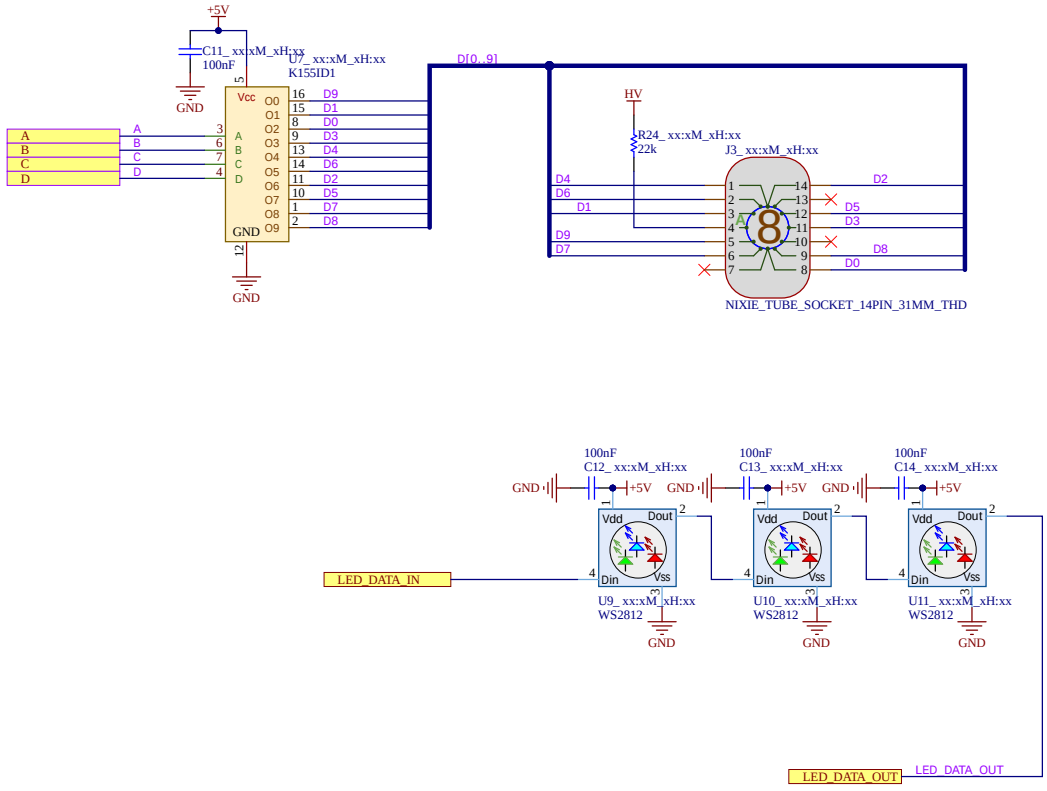

Title: *	
Project: nixie_clock_tubes	
Desc: Nixie Clock Tubes	
Ing. Daniele Basile asterix24@gmail.com	Variant: [No Variations] Status: Prototype
License: DB Home Copyright	Prj Rev: 0
File: tube.SchDoc — Rev: 0	Size: A3
Date: 16/05/2026 Time: 00:21:17 — Sheet 4 of 4	

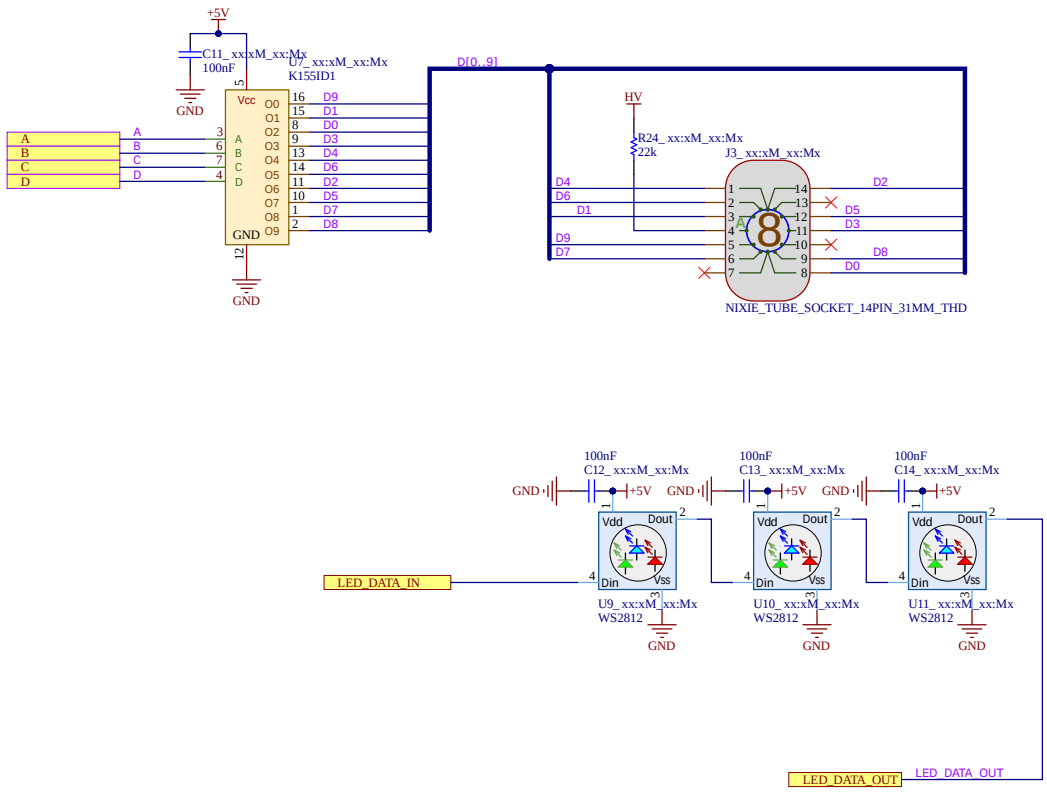

Title: *	
Project: nixie_clock_tubes	
Desc: Nixie Clock Tubes	
Ing. Daniele Basile **asterix24@gmail.com**	Variant: [No Variations]
	Status: Prototype
License: DB Home Copyright	Prj Rev: 0
File: tube.SchDoc / Rev: 0	Size: A3
Date: 16/05/2026 Time: 00:21:17 / Sheet 4 of 4	

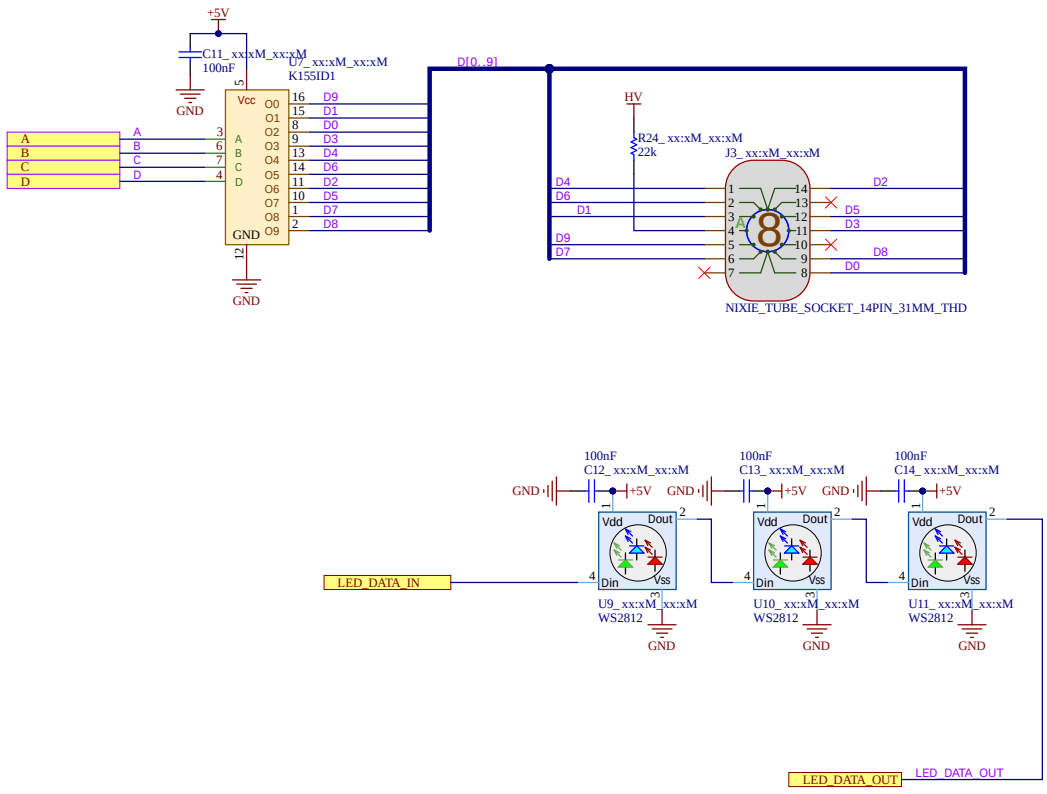

Title: *	
Project: nixie_clock_tubes	
Desc: Nixie Clock Tubes	
Ing. Daniele Basile **asterix24@gmail.com**	Variant: [No Variations]
	Status: Prototype
License: DB Home Copyright	Prj Rev: 0
File: tube.SchDoc / Rev: 0	Size: A3
Date: 16/05/2026 Time: 00:21:17 / Sheet 4 of 4	