ED214

REPORT ON REGISTER AND CLOCK MODULE

Astha Patel - 202304032

Objective :

To build an 8 bit computer using analog components. An 8 bit computer typically uses an 8 bit bus, that means it can process 8 bits of data at a time. This computer can do addition, subtraction and comparison operations.

My contribution : To design and construct a Register. Registers are small storage areas that hold data temporarily. They are crucial for quick access to data and instructions during processing.

Design and construction of a register :

Components :

Transceiver (74LS245) : This is a bidirectional transceiver with three state outputs. Bidirectional data means it allows data to flow from Bus A to Bus B or from Bus B to Bus A. Three state outputs are Logic high (1), Logic low (0) and high impedance (Z)(Disconnected state). It also has output enabled. When output enable is low, the device is enabled and data transfer can occur but when it is high data can not flow. When DIR(Direction control) is low data flows from Bus B to Bus A and when it is low data flows from Bus A to Bus B.

D-flip flop (74LSs173) : It is used for temporary storage of data and it can store 4 bits of the data. It also has 3 state outputs. It has clock input (CLK) that captures the data on the D inputs on a rising edge. It also has an input enable and clear pin that clears all data and reset the flip flop to 0. Input enable works the same as transceiver. When Input enable is

low, data from the D inputs is loaded into the flip flop on the rising edge of the CLK and data retained until a new clock pulse occurs or the register is reset.

LEDs, Resistors, clock circuit.

SCHEMATIC OF REGISTER B :

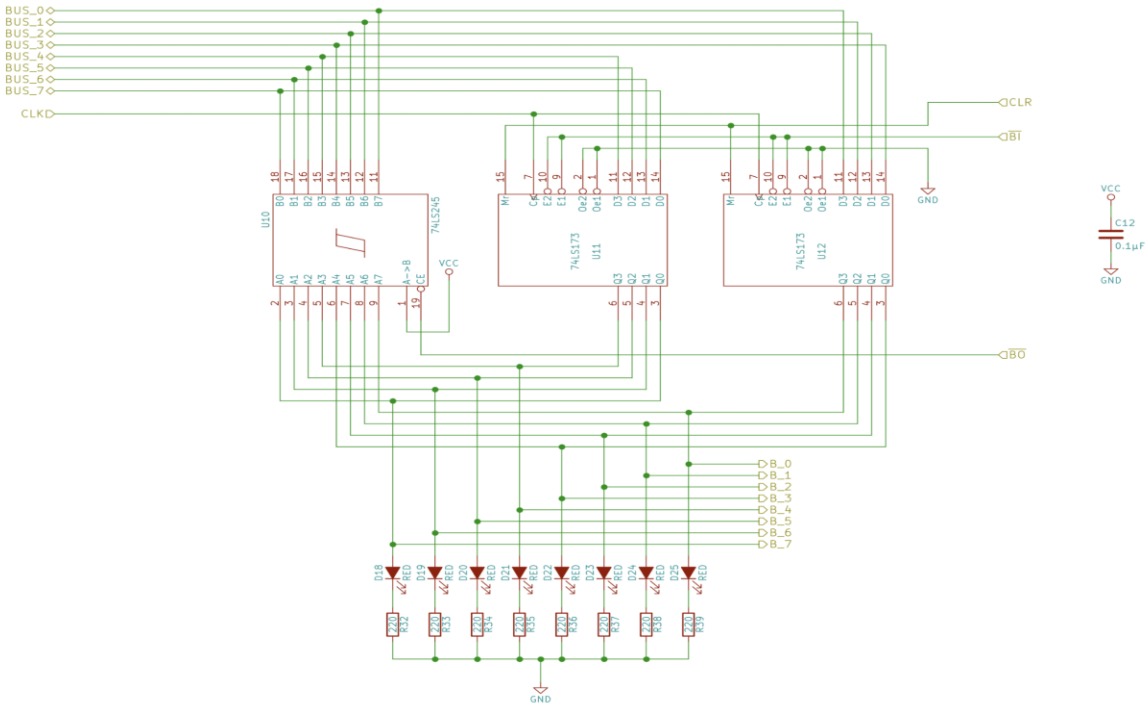

Using the above schematic, we manually made a circuit on a breadboard. Our Register was connected to the counter and ALU. When input enable was on, at the rising edge of the clock data comes from the counter through the bus and accordingly shows on the leds. When the output enable was on, data goes to ALU through bus. And AlU does the addition, subtraction. Whenever we put the pin clear to low, register sets to be all zeros.

PCB DESIGN OF REGISTER :

After making the register manually on the breadboard, we design PCB in easyeda software. Firstly we made the schematic of this register in that software. Schematic is shown below.

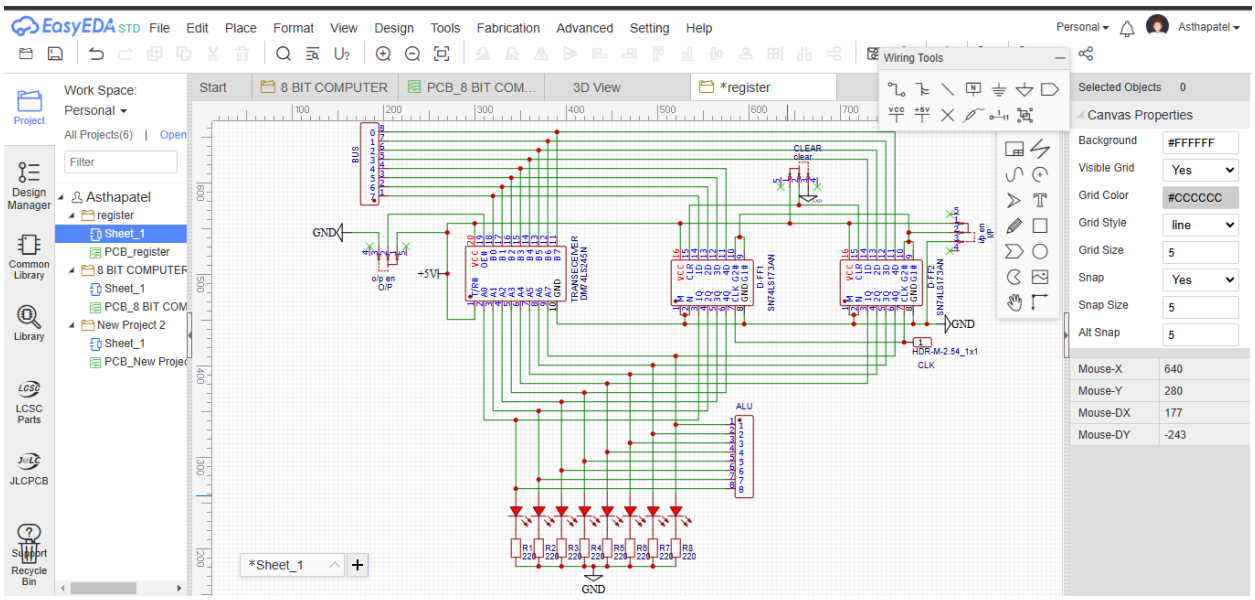

After making the schematic, we design the layout of the PCB. We made a double sided PCB. Below is the layout of top layer and bottom layer and top silk screen layer and 3D view.

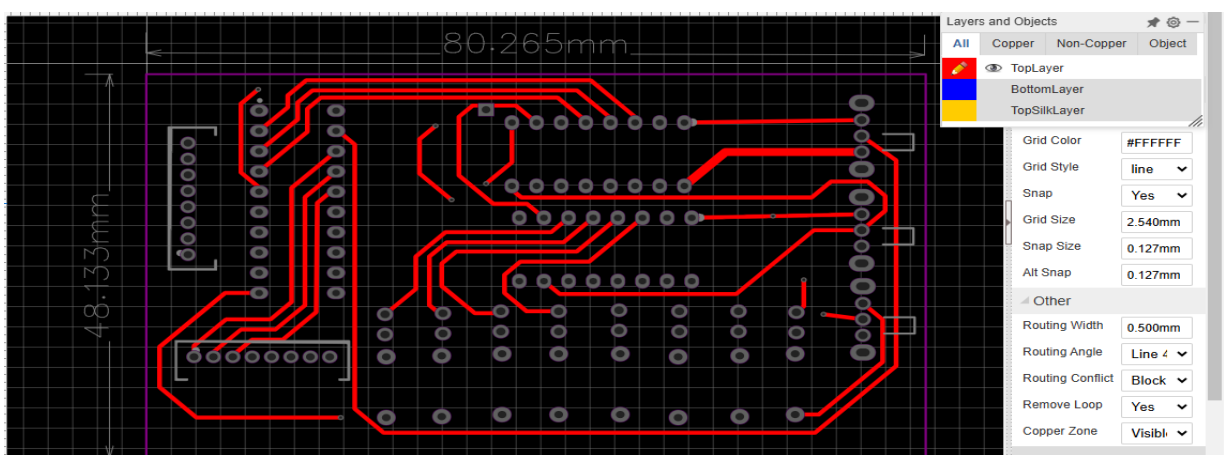

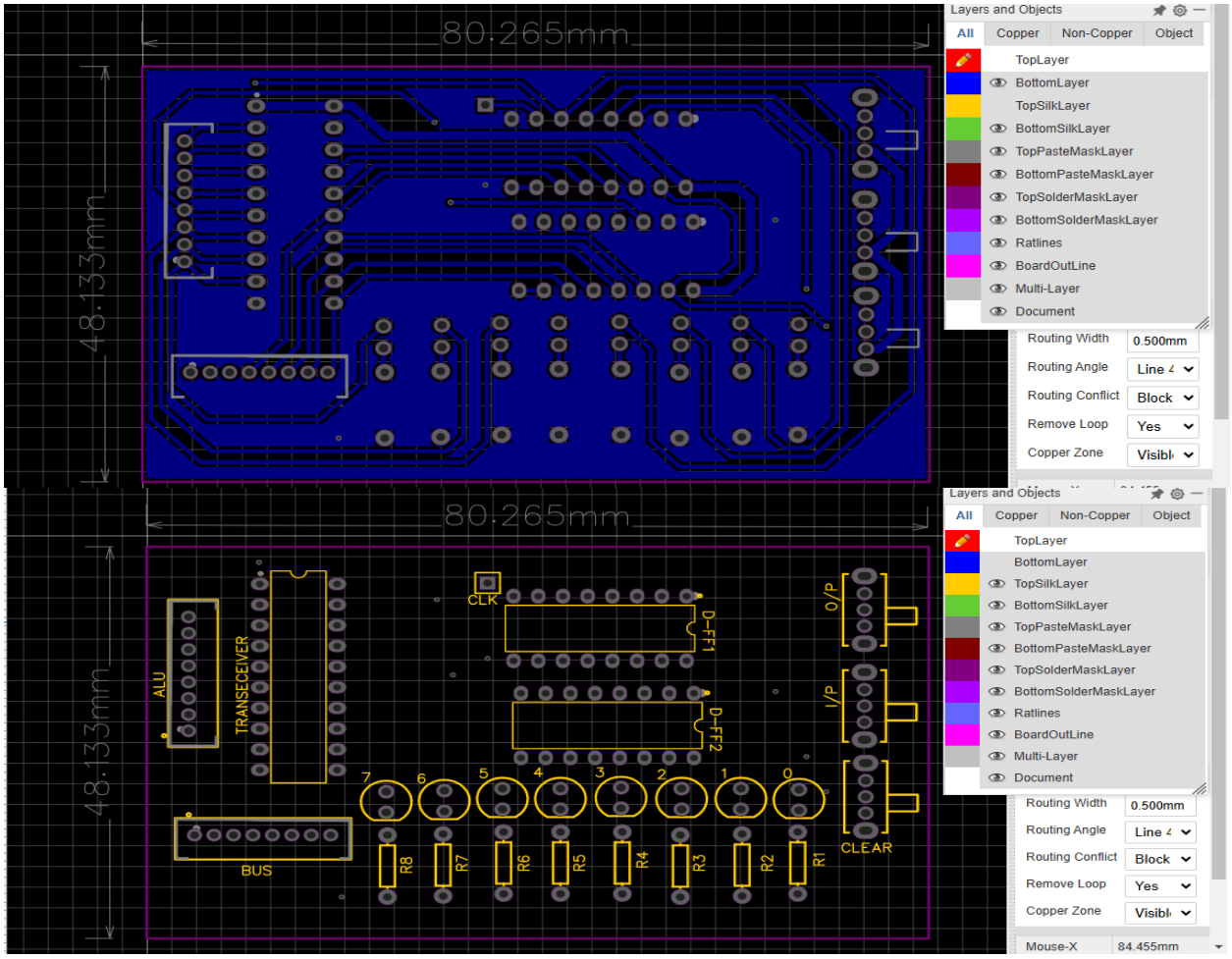
80.265mm
48.133mm
Layers and Objects
All
Copper
Non-Copper
Object
TopLayer
BottomLayer
TopSilkLayer
BottomSilkLayer
TopPasteMaskLayer
BottomPasteMaskLayer
TopSolderMaskLayer
BottomSolderMaskLayer
Ratlines
BoardOutLine
Multi-Layer
Document
Routing Width
0.500mm
Routing Angle
Routing Conflict
Block
Remove Loop
Yes
Copper Zone
ALU
TRANSECEIVER
CLK
D-FF1
D-FF2
O/P
I/P
CLEAR
BUS
R8
R7
R6
R5
R4
R3
R2
R1
Mouse-X
84.455mm

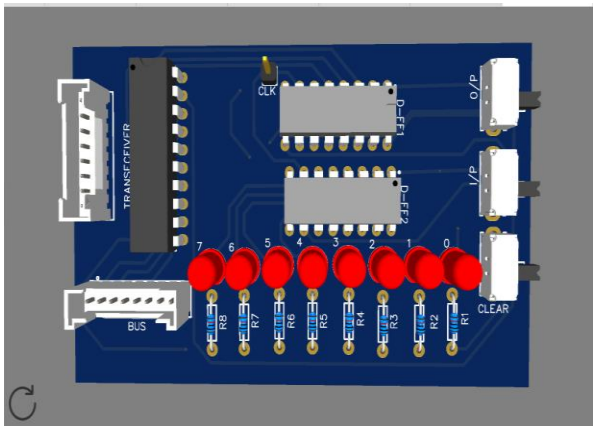
TRANSECEIVER
CLK
D-FF1
D-FF2
O/P
I/P
CLEAR
BUS
R8
R7
R6
R5
R4
R3
R2
R1

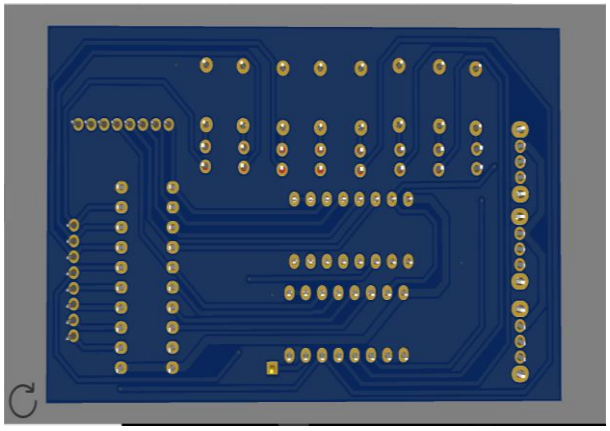

CLOCK CIRCUIT :

We also made clock circuit manually and on software also. Firstly we made half of the clock circuit which contained three modes : 1) Monostable 2) Bistable 3) Astable.

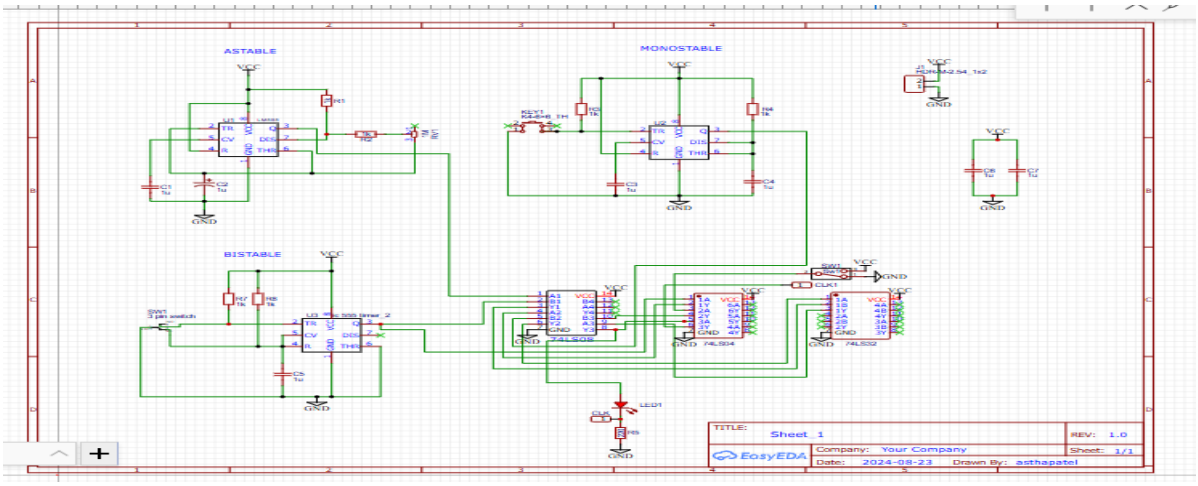

Components :

LM555 : It functions as a timer, pulse generator, or oscillator, Resistor,Capacitors, Pushbutton : For Astable mode, Slide Switch : For Bistable mode , 74LS08 : AND gate, 74LS32 : OR gate, 74LS04 : NOT gate, Potentiometer as variable register.

1. Monostable : In monostable mode, the 555 timer generates a single pulse of a fixed width when triggered by a push button. The duration of the pulse (width of the pulse) is set by the RC values of the resistor and capacitor connected to the timer. By pressing the button, a single clock pulse is sent, allowing us to observe one operation at a time. It helps isolate and identify errors in the computer by controlling each operation manually.
2. Bistable : In bistable mode, the 555 timer operates as a flip-flop, toggling the output state (ON/OFF) each time the trigger input is activated. This mode leverages the stable state behavior of the timer and its supporting logic. When the trigger input (pin 2) is momentarily pulled low (below 1/3 of the supply voltage), the internal flip-flop of the timer sets the output (pin 3) to HIGH. The output stays HIGH even after

the trigger input is released, due to the feedback loop that maintains the state. To reset the output, the reset input (pin 4) can be momentarily grounded. This forces the flip-flop to reset, causing the output to go LOW. The output remains LOW even after the reset signal is removed, until the trigger input is activated again to toggle the state.

3. Astable : In astable mode, the 555 timer functions as an oscillator, producing a continuous square wave signal. The frequency of this oscillation is determined by the values of the external resistors and capacitors in the circuit. In our case, the oscillation period was approximately 1.2 seconds. This mode provides a steady clock signal, which is essential for sequential execution of instructions at a fixed rate. It is particularly useful for automatic operations, where tasks need to be performed at regular intervals. By adjusting the values of the resistors and capacitors, the frequency of the clock signal can be fine-tuned, allowing for control over the speed of the system's operations, either speeding up or slowing down the execution of tasks.

Logic Circuit for Clock Control :

The clock signal (CLK) comes from one of the three modes (astable, monostable, or bistable). The selected mode is active, and others remain inactive.The clock can be stopped completely using the halt signal (HLTD), overriding all modes.

When the clock is active, the LED blinks in sync with the pulses, providing real-time feedback. The LED was blinking in a time interval of 1 second. In the oscilloscope, the time interval was 1.2 seconds which was close to the practical time interval. Then we made a PCB of this circuit in the same Easyeda software.

Here is the layout and the 3D view of the PCB of the clock circuit :

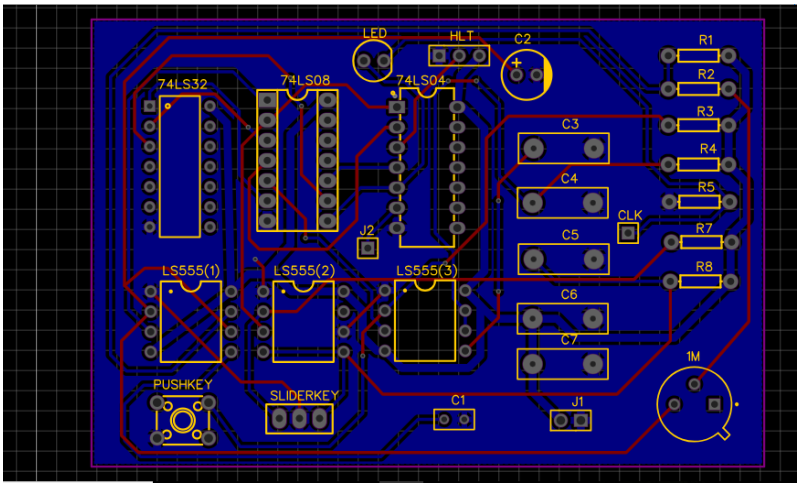

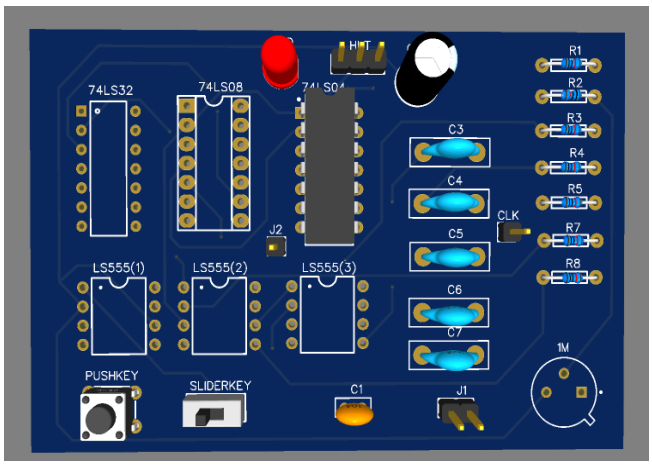

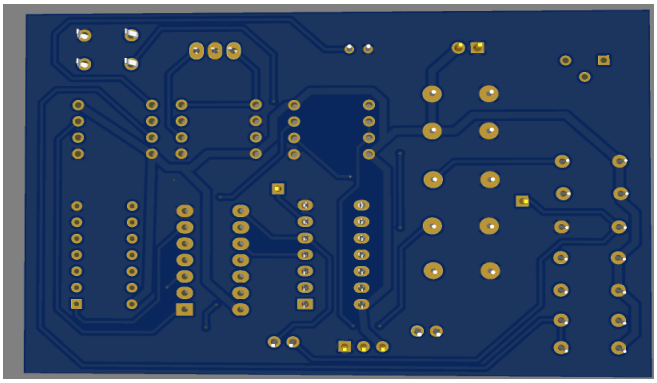

PROBLEMS WE FACED :

1. While integrating the circuit, the power supply was showing the short circuit and after checking each connection, we found out that some wires were touching inside

the breadboard which was not visible so we cut the extra part to solve the short circuit problem.

2. After doing this, we were still getting the short circuit sign in the power supply because on the power supply we put the i max to the lowest so leds were not able to pass the current and give the short circuit sign.
3. While making the circuit layout in the software, firstly I put the connector in the middle, but then sir told us to put it on the side of the PCB as it will connect to the other PCB. Same thing happened with the clock pin.
4. Also, I made V_cc path 0.5 mm and it was supposed to be wider than the other paths because if the path is too narrow, it may not be able to handle the required current leading to overheat or voltage drops.
5. Also I made the V_cc path on the same side as the components in the PCB. We should avoid this because the V_cc path carries significant current, which can generate heat and can affect the components.
6. We mistakenly integrated LSB as MSB and MSB as LSB so we were not getting the desired output as we wanted after integrating our register with another register, ALU and counter.