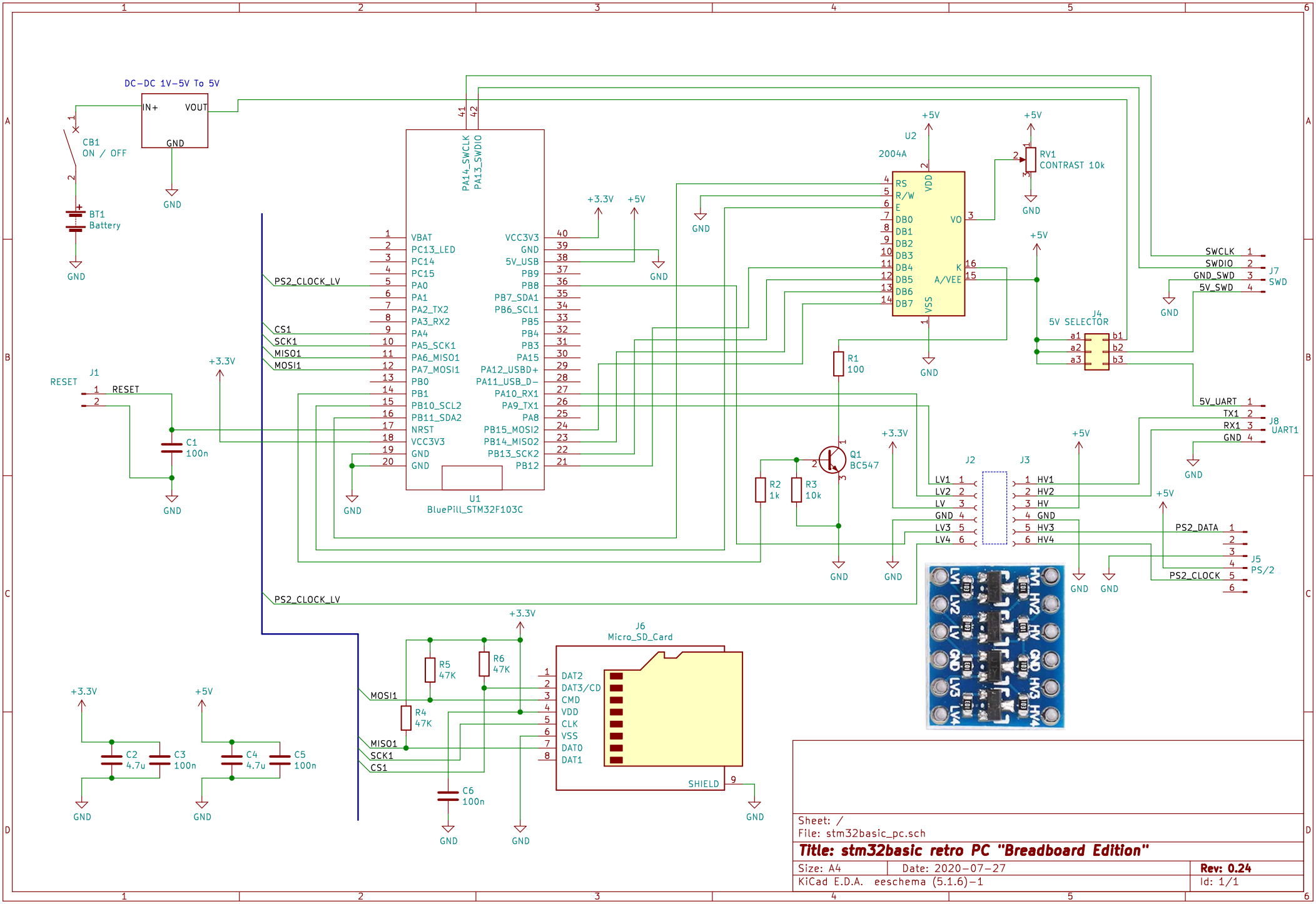

Sheet: /
File: stm32basic_pc.sch

Title: stm32basic retro PC "Breadboard Edition"

Size: A4	Date: 2020-07-27	**Rev: 0.24**
KiCad E.D.A. eeschema (5.1.6)-1		Id: 1/1