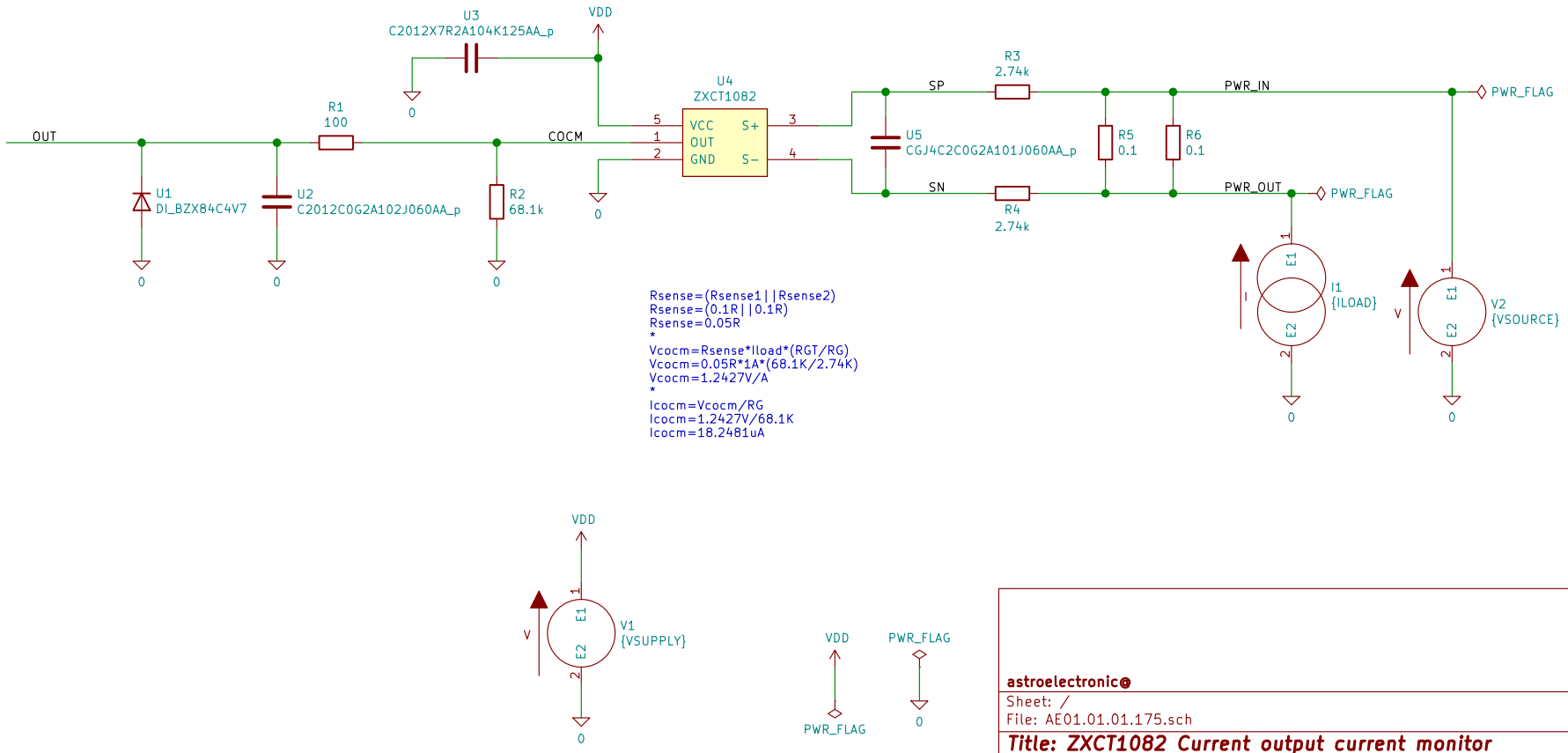

astroelectronic©

Sheet: /

File: AE01.01.01.175.sch

Title: ZXCT1082 Current output current monitor

Size: A4	Date: 2020-06-19	Rev: 1
KiCad E.D.A. kicad 5.1.6-c6e7f7d86ubuntu16.04.1		Id: 1/1