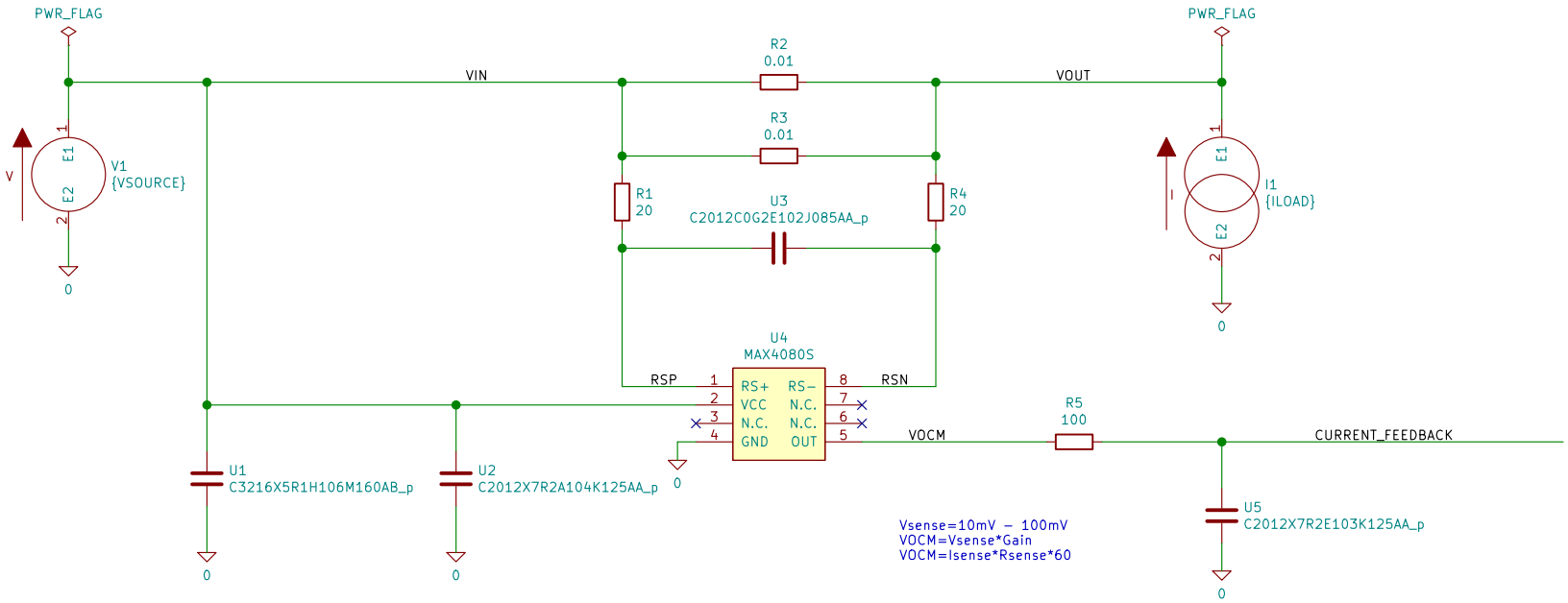


PWR_FLAG

0

astroelectronic©

Sheet: /

File: AE01.01.09.011.sch

**Title: MAX4080S Voltage output current monitor. Gain 60V/V**

| | | |
|---|---|---|
| Size: A4 | Date: 2020-05-12 | Rev: 1 |
| KiCad E.D.A. kicad 5.1.6-c6e7f7d86ubuntu16.04.1 | | Id: 1/1 |