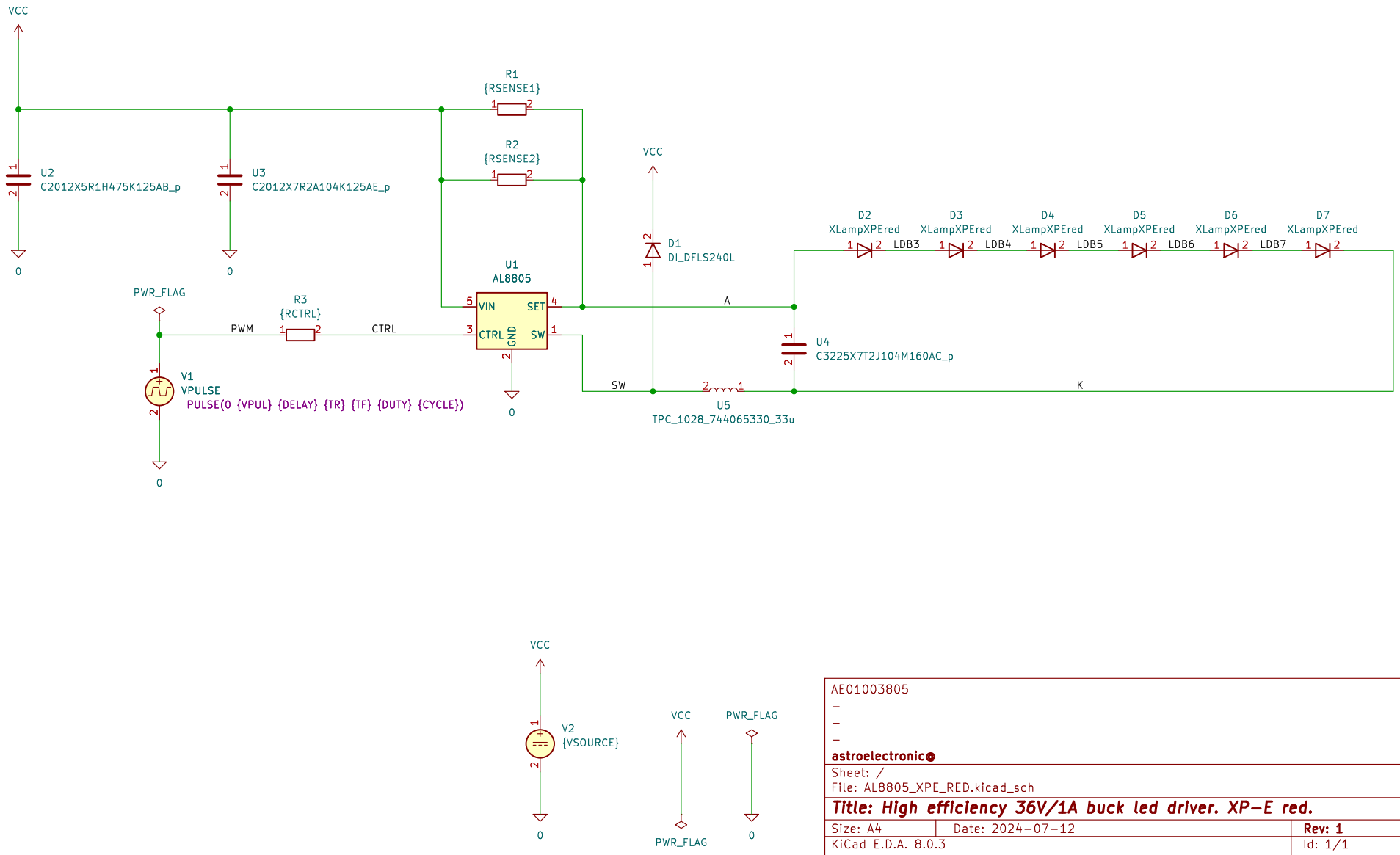

AE01003805
–
–
–
astroelectronic

Sheet: /
File: AL8805_XPE_RED.kicad_sch

Title: High efficiency 36V/1A buck led driver. XP-E red.

Size: A4	Date: 2024-07-12	**Rev: 1**
KiCad E.D.A. 8.0.3		Id: 1/1