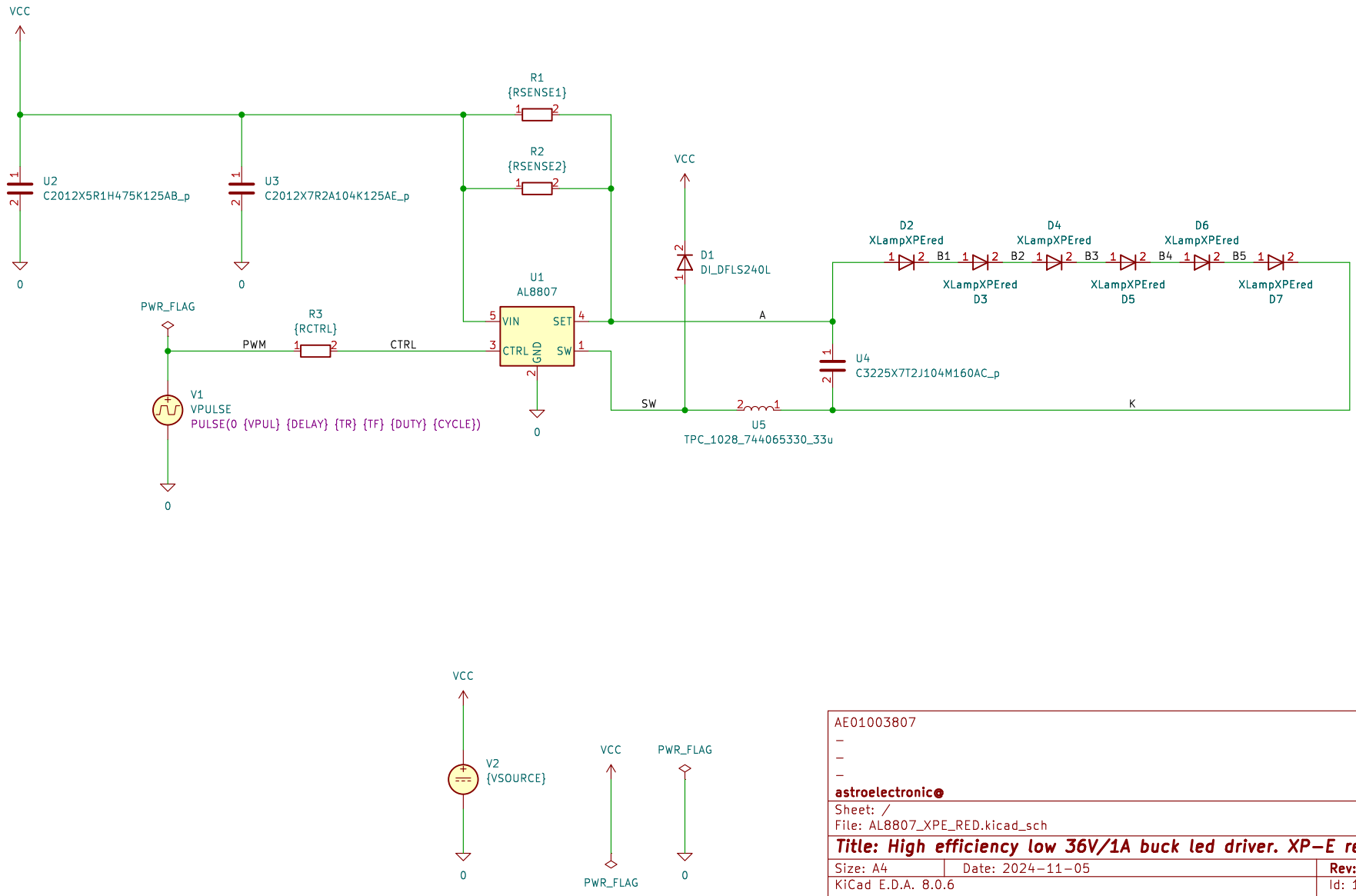

AE01003807
–
–
–
astroelectronic

Sheet: /
File: AL8807_XPE_RED.kicad_sch

Title: High efficiency low 36V/1A buck led driver. XP-E red.

Size: A4	Date: 2024-11-05	**Rev: 2**
KiCad E.D.A. 8.0.6		Id: 1/1