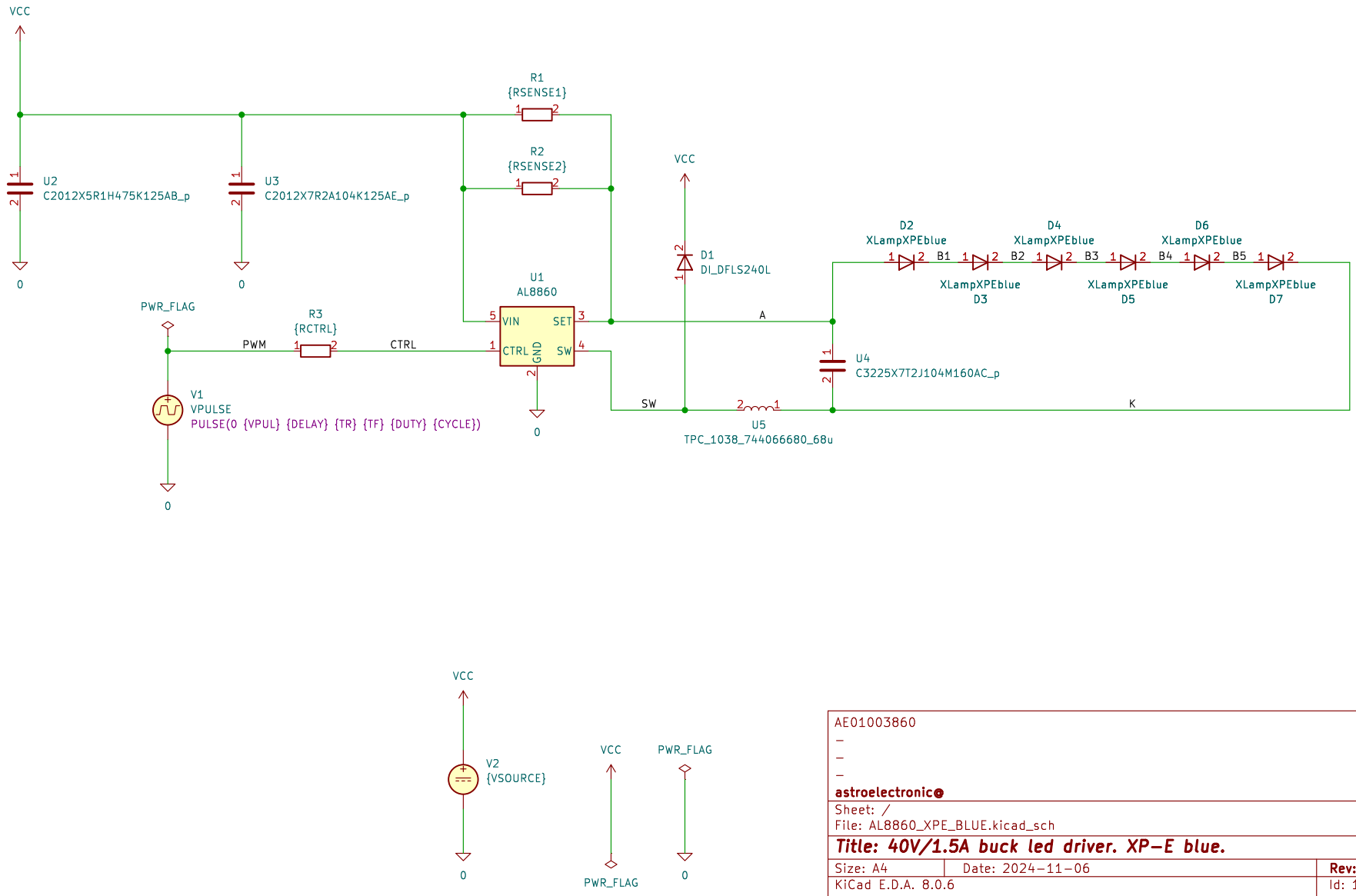

AE01003860
–
–
–
astroelectronic

Sheet: /
File: AL8860_XPE_BLUE.kicad_sch

Title: 40V/1.5A buck led driver. XP-E blue.

Size: A4	Date: 2024-11-06	**Rev: 2**
KiCad E.D.A. 8.0.6		Id: 1/1